G0.00 - TITLE SHEET

COASTSIDE FIRE PROTECTION DISTRICT

FIRE STATION #44

BID SET

CODES & STANDARDS

PARTIAL LIST OF APPLICABLE CODES

2022 California Administrative Code (CAC) ..... (Part 1, Title 24, CCR)
2022 California Building Code (CBC) ..... (Part 2, Title 24, CCR)
(2021 International Building Code Volumes 1 & 2 with 2022 California Amendments)
2022 California Electrical Code (CEC) ..... (Part 3, Title 24, CCR)
(2020 National Electrical Code with 2022 California Amendments)
2022 California Mechanical Code (CMC) ..... (Part 4, Title 24, CCR)
(2021 IAPMO Uniform Mechanical Code with 2022 California Amendments)
2022 California Plumbing Code (CPC) ..... (Part 5, Title 24, CCR)
(2021 IAPMO Uniform Plumbing Code with 2022 California Amendments)
2022 California Energy Code (CEC) ..... (Part 6, Title 24, CCR)
2022 California Fire Code (CFC) ..... (Part 9, Title 24, CCR)
(2021 International Fire Code with 2022 California Amendments)
2022 California Existing Building Code (CEBC) ..... (Part 10, Title 24, CCR)
(2021 International Existing Building Code with 2022 California Amendments)
2022 California Green Building Standards Code (CALGreen) ..... (Part 11, Title 24, CCR)
2022 California Referenced Standards Code ..... (Part 12, Title 24, CCR)
Title 19 CCR, Public Safety, State Fire Marshall Regulations
2019 ASME A17.1/CSA B44-13 Safety Code For Elevators and Escalators (per 2022 CBC Part 2, Ch 35)
Note: Cal/OSHA Elevator Unit enforces CCR Title 8 and uses the 2004 ASME A17.1 by adoption

PARTIAL LIST OF APPLICABLE STANDARDS

NFPA 13 ... Standard for the Installation of Sprinkler Systems (as amended) * ..... (2022 Edition)
NFPA 14 ... Standard for the Installation of Standpipe and Hose Systems (as amended) * ..... (2019 Edition)
NFPA 17 ... Standard for Dry Chemical Extinguishing Systems ..... (2021 Edition)
NFPA 17A.. Standard for Wet Chemical Extinguishing Systems ..... (2021 Edition)
NFPA 20 ... Standard for the Installation of Stationary Pumps for Fire Protection ..... (2019 Edition)
NFPA 22 ... Standard for Water Tanks for Private Fire Protection ..... (2018 Edition)
NFPA 24 ... Standard for the Installation of Private Fire Service Mains and Their Appurtenances (as amended)* ..... (2019 Edition)
NFPA 25 ... Standard for the Inspection, Testing, and Maintenance of Water-Based Fire Protection Systems with California Amendments (Based on NFPA 25, 2011 Edition) ..... (2013 Edition)
NFPA 72 ... National Fire Alarm and Signaling Code (as amended) * ..... (2022 Edition)
NFPA 80 ... Fire Doors and Other Opening Protectives ..... (2019 Edition)
NFPA 92 ... Standard for Smoke Control Systems ..... (2018 Edition)
NFPA 253.. Standard Method of Test for Critical Radiant Flux of Floor Covering Systems Using a Radiant Heat Energy Source ..... (2019 Edition)
NFPA 2001 Standard on Clean Agent Fire Extinguishing Systems (as amended) * ..... (2018 Edition)
ICC 300 ..... ICC Standard on Bleachers, Folding and Telescoping Seating and Grandstands ..... (2017 Edition)
UL 300 ..... Standard for Fire Testing of Fire Extinguishing Systems for Protection of Commercial Cooking Equipment—with Revisions through December 2014 ..... 2005 (R2010)
UL 464 ..... Audible Signal Appliances—with Revisions through October 10, 2003 ..... (2003 Edition)
UL 521 ..... Heat Detectors for Fire Protective Signaling Systems—with Revisions through July 20, 2005 ..... (1999 Edition)
UL 1971 ..... Standard for Signaling Devices for the Hearing Impaired ..... (2018 Edition)
* See CBC Chapter 35, Referenced Standards for State of California amendments to the NFPA Standards.
For a complete list of applicable NFPA standards refer to 2022 CBC (SFM) Chapter 35 and California Fire Code (CFC) Chapter 80.

GENERAL NOTES

1. ALL WORK AND MATERIALS SHALL BE IN FULL ACCORDANCE WITH THE REQUIREMENTS OF THE CODES AND ALL APPLICABLE LOCAL ORDINANCES. WHERE CONTRACT DOCUMENTS EXCEED SUCH REQUIREMENTS, WITHOUT VIOLATING SUCH CODES, REGULATIONS AND ORDINANCES, CONTRACT DOCUMENTS TAKE PRECEDENCE. WHERE CODES CONFLICT, THE MORE STRINGENT SHALL APPLY.
2. PERFORMANCE BY THE CONSTRUCTION TEAM SHALL BE CONSISTENT WITH THE CONSTRUCTION DRAWINGS AND PROJECT MANUAL (SPECIFICATIONS) AS NECESSARY TO DELIVER THE INDICATED RESULTS OF THE DESIGN INTENT.
3. REFER TO THE PROJECT MANUAL (SPECIFICATIONS) FOR GENERAL CONDITIONS, SUPPLEMENTARY AND SPECIAL CONDITIONS, AND OTHER REQUIREMENTS.
4. THE CONSTRUCTION DOCUMENT DRAWINGS AND PROJECT MANUAL (SPECIFICATIONS) ARE COMPLIMENTARY, AND WHAT IS REQUIRED BY ONE SHALL BE AS BINDING AS IF REQUIRED BY BOTH.
5. THE CONTRACTOR SHALL:
   A. CONFIRM ALL NEW AND EXISTING CONDITIONS WITH THE CONTRACT DOCUMENTS. NOTIFY THE ARCHITECT IMMEDIATELY IN WRITING OF ALL DISCREPANCIES OR CONFLICTS. DO NOT PROCEED WITH WORK IN THE AREA OF DISCREPANCY OR CONFLICT UNTIL DIRECTION IS GIVEN BY THE ARCHITECT. IF THE CONTRACTOR PROCEEDS WITHOUT DIRECTION FROM THE ARCHITECT, IT SHALL BE AT THE CONTRACTOR'S RISK, AND THE CONTRACTOR SHALL BE RESPONSIBLE FOR ALL REQUIRED CORRECTIVE ACTION.
   B. REVIEW THE ARCHITECTURAL DRAWINGS BEFORE THE INSTALLATION OF SYSTEMS SHOWN ON CONSULTING ENGINEER'S DOCUMENTS. DISCREPANCIES BETWEEN THE ARCHITECTURAL AND CONSULTING ENGINEER'S DOCUMENTS SHALL BE BROUGHT TO THE ARCHITECT'S ATTENTION FOR DIRECTION. CONSTRUCTION INSTALLED IN CONFLICT WITH THE ARCHITECTURAL DRAWINGS SHALL BE CORRECTED BY THE CONTRACTOR AT NO EXPENSE TO THE OWNER.
   C. CORRECT ALL WORK INSTALLED IN CONFLICT WITH THE CONSTRUCTION DOCUMENTS BY THE CONTRACTOR AS DIRECTED BY THE ARCHITECT AND AT NO ADDITIONAL EXPENSE TO THE OWNER.
   D. VISIT JOB SITE PRIOR TO BEGINNING WORK AND VERIFY ALL DIMENSIONS.
   E. SECURE AND PAY FOR ALL PERMITS, GOVERNMENTAL FEES, AND LICENSES REQUIRED FOR PROPER COMPLETION OF THE WORK. REQUEST ALL INSPECTIONS REQUIRED BY LOCAL GOVERNMENTAL AGENCIES AND COORDINATE WORK ACCORDINGLY.
   F. PROVIDE FOR THE PROPER SEQUENCE OF CONSTRUCTION, LOCATION, AND SIZE OF OPENINGS. COORDINATE ALL CONSTRUCTION AS INDICATED BY THE CONTRACT DOCUMENTS, INCLUDING SHOP DRAWINGS REVIEWED BY THE ARCHITECT.
   G. PROVIDE BARRICADES AND PROTECTIVE DEVICES SEPARATING CONSTRUCTION AREAS. PROVIDE TEMPORARY PASSAGES AS REQUIRED. PRIOR TO DELIVERY OF MATERIALS TO CONSTRUCTION ZONE AND REMOVAL OF WASTE FROM SITE, CHECK WITH OWNER FOR ACCEPTABLE ACCESS ROUTE AND TIME. UNDER NO CIRCUMSTANCES USE AREA OUTSIDE THE CONSTRUCTION ZONE WITHOUT PRIOR CLEARANCE FROM THE OWNER. COMPLY WITH REQUIREMENTS AS SPECIFIED IN THE PROJECT MANUAL.
   H. REMOVE ALL TRASH AND DEBRIS DAILY. DO NOT STORE BUILDING MATERIALS IN CORRIDORS AT ANY TIME. COMPLY WITH REQUIREMENTS AS SPECIFIED IN THE PROJECT MANUAL (SPECIFICATIONS).
   I. ENACT ALL MEASURES TO PROTECT IN PLACE AND SAFEGUARD ALL ELEMENTS TO REMAIN FROM BEING DAMAGED. REPLACE OR REPAIR ELEMENTS DAMAGED BY THE EXECUTION OF THE CONTRACT TO EQUAL OR LIKE NEW CONDITION.
   J. VERIFY POINTS OF CONNECTION, INCLUDING SIZES AND LOCATIONS, AND ALL OTHER REQUIRED OPERATING CRITERIA WITH EQUIPMENT MANUFACTURER.
   K. COORDINATE THE LOCATION AND TYPE OF ALL ACCESS PANELS REQUIRED FOR ACCESSING MECHANICAL, PLUMBING, ELECTRICAL, AND OTHER BUILDING SYSTEMS WITH THE ARCHITECT.
   L. ENSURE ALL CONSTRUCTION REMAINS ACCESSIBLE AND EXPOSED FOR INSPECTION PURPOSES UNTIL APPROVED BY THE INSPECTOR OF RECORD. FOR CONTINUOUS INSPECTION, TESTING, AND OBSERVATION REQUIREMENTS, REFER TO THE TESTING AND OBSERVATION PROGRAM.
   M. STIPULATE THAT ALL PROPOSED SUBSTITUTIONS ARE EQUAL IN PERFORMANCE AND COMPLY WITH APPLICABLE CODES AND REGULATIONS. CONTRACTOR'S SUBSTITUTION OF ALTERNATE MATERIALS OR SYSTEMS SHALL BE AT NO ADDITIONAL COST TO OWNER.
6. DO NOT SCALE THE CONSTRUCTION DOCUMENTS. WRITTEN DIMENSIONS TAKE PRECEDENCE OVER SCALED GRAPHICS. NOTIFY THE ARCHITECT IMMEDIATELY IN WRITING OF ALL ADDITIONAL REQUIRED DIMENSIONS. DO NOT PROCEED WITH WORK IN THE AREA OF DISCREPANCY OR CONFLICT UNTIL DIRECTION IS GIVEN BY THE ARCHITECT. IF THE CONTRACTOR PROCEEDS WITHOUT DIRECTION FROM THE ARCHITECT, IT SHALL BE AT THE CONTRACTOR'S RISK, AND THE CONTRACTOR SHALL BE RESPONSIBLE FOR ALL REQUIRED CORRECTIVE ACTION.
7. WHERE WORK OR EQUIPMENT IS INDICATED "N.I.C." (NOT IN CONTRACT) ON THE DRAWINGS, SUCH WORK AND/OR EQUIPMENT SHALL BE PROVIDED BY OTHERS. CONTRACTOR SHALL COORDINATE AND COOPERATE TO EFFECT SUCH INSTALLATION.
8. ALL PLAN DIMENSIONS SHOWN AT CENTER OF WALL REPRESENT CENTER LINE OF STUD OR STRUCTURAL ELEMENT UNLESS NOTED OTHERWISE.
9. DIMENSIONS OF STUDS ARE FROM CENTERLINE OF INTERIOR STUDS OR FACE OF EXTERIOR STUDS.
10. DIMENSIONS ARE NOT ADJUSTABLE WITHOUT THE REVIEW OF THE ARCHITECT UNLESS NOTED (±) OR "VERIFY". DIMENSIONS NOTED "HOLD" SHALL BE CONSIDERED AS ABSOLUTE AND USED FOR LAYOUT CONTROL UNLESS OTHERWISE DIRECTED BY THE ARCHITECT.
11. ANY ITEM, CONDITION OR DIMENSION NOTED AS "FIELD VERIFY" OR "VERIFY IN FIELD" SHALL BE CONFIRMED ON SITE BY THE CONTRACTOR AND REVIEWED WITH THE ARCHITECT OF RECORD BEFORE INCORPORATING INTO THE WORK.
12. ALL HEIGHTS ARE DIMENSIONED FROM TOP OF SLAB UNLESS NOTED "AFF" (ABOVE FINISH FLOOR)
13. "TYPICAL" MEANS COMPARABLE CHARACTERISTICS FOR THE ELEVATION OR DETAIL NOTED. WHEN A DETAIL OR NOTE IS IDENTIFIED AS "TYPICAL", THE CONTRACTOR SHALL APPLY THIS DETAIL OR NOTE TO EVERY LIKE CONDITION, WHETHER OR NOT THE REFERENCE IS REPEATED IN EVERY INSTANCE. VERIFY DIMENSIONS AND ORIENTATION ON PLANS.
14. PROVIDE WORK NOT SPECIFICALLY DETAILED OR SPECIFIED IN ACCORDANCE WITH DETAILS OR SIZES COVERING SIMILAR WORK.
15. "SIMILAR" MEANS COMPARABLE CHARACTERISTICS FOR THE ELEVATION OR DETAIL NOTED. VERIFY DIMENSIONS AND ORIENTATION ON PLANS.
16. ABBREVIATIONS THROUGHOUT THE DOCUMENTS COMPLY WITH DOCUMENT ABBREVIATION LIST OR ARE THOSE IN COMMON USE. ARCHITECT WILL DEFINE THE INTENT OF ANY IN QUESTION.
17. THESE DRAWINGS DO NOT CONTAIN THE NECESSARY COMPONENTS FOR CONSTRUCTION SAFETY
18. THESE DOCUMENTS AND THE IDEAS AND DESIGNS INCORPORATED HEREIN, AS AN INSTRUMENT OF PROFESSIONAL SERVICE, ARE THE PROPERTY OF PBK ARCHITECTS, INC., AND ARE NOT TO BE USED, IN WHOLE OR IN PART, FOR ANY OTHER PROJECT WITHOUT THE WRITTEN AUTHORIZATION OF PBK ARCHITECTS, INC.
19. THE WORK SHOWN ON THESE DRAWINGS AS EXISTING CONDITIONS WAS PREPARED FROM INFORMATION FURNISHED BY THE OWNER. WHILE THIS INFORMATION IS BELIEVED TO BE RELIABLE, PBK ARCHITECTS, INC. IS NOT RESPONSIBLE FOR THE ACCURACY OR ADEQUACY OF ANY WORK SHOWN AS EXISTING NOR IS PBK ARCHITECTS, INC. RESPONSIBLE FOR ANY ERRORS OR OMISSIONS WHICH MAY HAVE BEEN INCORPORATED INTO THESE DRAWINGS AS A RESULT.
20. FIRE SAFETY DURING CONSTRUCTION:
   A. GENERAL: FIRE SAFETY DURING CONSTRUCTION SHALL COMPLY WITH CALIFORNIA FIRE CODE (CFC) CALIFORNIA CODE OF REGULATIONS (CCR) TITLE 24, PART 9, CHAPTER 5 AND CHAPTER 33.
   B. ACCESS ROADS: FIRE DEPARTMENT ACCESS ROADS SHALL BE ESTABLISHED AND MAINTAINED IN ACCORDANCE WITH CHAPTER5, SECTION 501.4 AND CHAPTER 33, SECTION 3310.
   C. WATER SUPPLY: WATER MAINS AND HYDRANTS SHALL BE OPERATION IN ACCORDANCE WITH CHAPTER 5, SECTION 501.4 AND CHAPTER 33, SECTION 3312.
   D. BUILDING ACCESS: ACCESS TO BUILDINGS FOR THE PURPOSE OF FIREFIGHTING SHALL BE PROVIDED. CONSTRUCTION MATERIAL SHALL NOT BLOCK ACCESS TO BUILDINGS, HYDRANTS OR FIRE APPLIANCES.
   E. ALTERATIONS OF BUILDINGS: SHALL COMPLY WITH APPLICABLE PROVISIONS OF CHAPTER 33.
   F. DEMOLITION OF BUILDINGS: SHALL COMPLY WITH APPLICABLE PROVISIONS OF CHAPTER 33.
   G. FIRE WATCH: MAINTAIN FIRE WATCH WHEN REQUIRED BY THE BUILDING OFFICIAL AND WHEN EXISTING FIRE PROTECTION SYSTEMS ARE SHUT DOWN FOR ALTERATIONS IN ACCORDANCE WITH CHAPTER 33, SECTION 3304.5. FIRE WATCH SHALL REMAIN IN EFFECT UNTIL EXISTING FIRE PROTECTION SYSTEMS ARE RETURNED TO SERVICE OR AS ALLOWED BY THE BUILDING OFFICIAL.
21. PENETRATIONS TO FIRE RATED MATERIALS OR ASSEMBLIES SHALL BE RESTORED TO EQUAL RATING. FIRE STOP SYSTEMS AS LISTED BY UNDERWRITERS LABORATORIES SHALL BE INSTALLED PER FIRE RESISTANCE DIRECTORY. FIRE STOP SYSTEMS SHALL BE AS SPECIFIED.
22. CUTTING, BORING, SAW-CUTTING OR DRILLING THROUGH STRUCTURAL ELEMENTS SHALL NOT COMMENCE UNTIL THE DRAWINGS HAVE BEEN SUMITTED, REVIEWED, AND APPROVED BY THE ARCHITECT OF RECORD.
23. NONRESIDENTIAL ENERGY STANDARDS COMPLIANCE STATEMENT (TITLE 24, PART 6):

   THE DESIGN INDICATED HEREIN COMPLIES WITH THE REQUIREMENTS OF THE ENERGY CONSERVATION STANDARDS OF TITLE 24, PART 6, CALIFORNIA CODE OF REGULATIONS. THE PROPOSED BUILDING(S) WILL BE IN COMPLIANCE WITH THE ENERGY CONSERVATION STANDARDS PROVIDED IT (THEY) IS (ARE) BUILT ACCORDING TO THESE DRAWINGS AND SPECIFICATIONS AND PROVIDED ANY FUTURE IMPROVEMENTS ARE COMPLETED ACCORDING TO THE REQUIREMENTS OF TITLE 24, PART 6, CALIFORNIA CODE OF REGULATIONS. THESE PLANS AND SPECIFICATIONS HAVE BEEN PREPARED TO INCLUDE ALL SIGNIFICANT ENERGY CONSERVATION FEATURES REQUIRED FOR COMPLIANCE WITH THE STANDARDS. BUILDING AREAS THAT ARE UNCONDITIONED AND/OR NOT SUBJECT TO THE STANDARDS ARE INDICATED ON THE PLANS.

   ENVELOPE MANDATORY MEASURES:

   A. INSTALLED INSULATING MATERIALS SHALL HAVE BEEN CERTIFIED BY THE MANUFACTURER TO COMPLY WITH THE CALIFORNIA QUALITY STANDARDS FOR INSULATING MATERIAL.
   B. ALL INSULATING MATERIALS SHALL BE INSTALLED IN COMPLIANCE WITH THE FLAME SPREAD RATING AND SMOKE DENSITY REQUIREMENTS OF TITLE 24, PART 2, CALIFORNIA CODE OF REGULATIONS. SECTIONS 720 AND 2603.
   C. ALL EXTERIOR JOINTS AND OPENINGS IN THE BUILDING ENVELOPE THAT ARE POTENTIAL AND OBSERVABLE SOURCES OF AIR LEAKAGE SHALL BE CAULKED, GASKETED, WEATHERSTRIPPED OR OTHERWISE SEALED.
   D. SITE CONSTRUCTED DOORS, WINDOWS, AND SKYLIGHTS SHALL BE CAULKED BETWEEN THE UNIT AND THE BUILDING, AND SHALL BE WEATHERSTRIPPED (EXCEPT FOR UNFRAMED GLASS DOORS AND FIRE DOORS).
   E. MANUFACTURED DOORS AND WINDOWS INSTALLED SHALL HAVE AIR INFILTRATION RATES CERTIFIED BY THE MANUFACTURER IN ACCORDANCE WITH TITLE 24, PART 6, CALIFORNIA CODE OF REGULATIONS, SECTION 110.6.
   F. MANUFACTURED FENESTRATION PRODUCTS IN THE ENVELOPE OF THE BUILDING, INCLUDING, BUT NOT LIMITED TO, WINDOWS, SLIDING GLASS DOORS, FRENCH DOORS, SKYLIGHTS, CURTAIN WALLS, AND GARDEN WINDOWS MUST BE LABELED FOR U-VALUE IN ACCORDANCE WITH THE (NFRC) NATIONAL FENESTRATION RATING COUNCIL'S INTERIM U-VALUE RATING PROCEDURE.
   G. DEMISING WALL INSULATION SHALL BE INSTALLED IN ALL OPAQUE PORTIONS OF FRAMED WALLS (EXCEPT DOORS).
24. ALL WORK SHOWN ON THESE DRAWINGS SHALL COMPLY WITH THE REQUIREMENTS OF TITLE 24, CALIFORNIA CODE OF REGULATIONS (CCR).
25. CHANGES TO THE APPROVED DRAWINGS AND SPECIFICATIONS SHALL BE MADE BY AN ADDENDUM OR A CONSTRUCTION CHANGE DOCUMENT APPROVED BY THE AUTHORITY HAVING JURISDICTION, AS REQUIRED BY TITLE 24, CCR, PART 1, SECTION 4-338.
26. GRADING PLANS, DRAINAGE IMPROVEMENTS, ROAD AND ACCESS REQUIREMENTS AND ENVIRONMENTAL HEALTH CONSIDERATIONS SHALL COMPLY WITH ALL LOCAL ORDINANCES.
27. DRINKING WATER SHALL COMPLY WITH ALL LOCAL HEALTH DEPARTMENT REQUIREMENTS.
28. SEPARATE PERMIT IS REQUIRED FOR EACH BUILDING STRUCTURE SUCH AS FENCE WALLS AND RETAINING WALLS, LIGHT POLES, SIGNS.
29. THE OWNER SHALL EMPLOY THE ENGINEER OR ARCHITECT RESPONSIBLE FOR THE STRUCTURAL DESIGN OR PERSON DESIGNATED BY THEM TO PERFORM VISUAL STRUCTURAL OBSERVATION OF THE STRUCTURAL SYSTEM AT SIGNIFICANT CONSTRUCTION STAGES AND AT THE COMPLETION OF THE STRUCTURAL SYSTEM. OBSERVED DEFICIENCIES WILL BE REPORTED TO OWNER, CONRACTOR, SPECIAL INSPECTOR AND BUILDING OFFICIAL IN WRITING.
30. ALL SLOPE AND CROSS SLOPE OF ACCESSIBLE ROUTE PAVING INDICATED ON THESE DRAWINGS WAS DESIGNED IN COMPLIANCE WITH THE 2010 ADA STANDARDS FOR ACCESSIBLE DESIGN AND THE ACCESSIBILITY STANDARDS OF THE CALIFORNIA BUILDING CODE (CBC) TITLE 24, PART 2, CHAPTER 11B OF THE CALIFORNIA CODE OF REGULATIONS (CCR). STRICT EXECUTION OF THE SLOPE AND CROSS SLOPE OF ACCESSIBLE ROUTE PAVING IS THE SOLE RESPONSIBILITY OF THE CONTRACTOR. SHOULD A CONDITION PRESENT ITSELF THAT WOULD RESULT IN AN INSTALLATION OTHER THAN WHAT IS INDICATED IN THESE DRAWINGS, PBK ARCHITECTS INC. SHALL BE NOTIFIED IN WRITING AND A COMPLIANT RESOLUTION WILL BE FORMULATED.
31. GRADING PERMIT AND ROUGH GRADING APPROVAL ARE REQUIRED PRIOR TO ISSUANCE OF A BUILDING PERMIT.
32. DEFERRED SUBMITTAL ITEMS:

   INSTALLATION OF DEFERRED SUBMITTAL ITEMS SHALL NOT BE STARTED UNTIL DETAILED PLANS, SPECIFICATIONS, AND ENGINEERING CALCULATIONS HAVE BEEN ACCEPTED AND SIGNED BY THE ARCHITECT OR ENGINEER IN GENERAL RESPONSIBLE CHARGE OF DESIGN AND SIGNED BY A CALIFORNIA REGISTERED ARCHITECT OR PROFESSIONAL ENGINEER WHO HAS BEEN DELEGATED RESPONSIBILITY COVERING THE WORK SHOWN ON A PARTICULAR PLAN OR SPECIFICATION AND APPROVED BY THE AUTHORITY HAVING JURISDICTION.

   DEFFERED SUBMITTAL ITEMS SHALL BE SUBMITTED FOR REVIEW NO LATER THAN 60 DAYS AFTER THE NOTICE TO PROCEED.

   DEFERRED SUBMITTAL ITEMS FOR THIS PROJECT ARE THE FOLLOWING ITEMS:

   1. AUTOMATIC FIRE SPRINKLER SYSTEM
   2. FIRE ALARM
   3. UNDERGROUND FIRE
   4. ROOF TRUSS DESIGN
   5. FUEL TANK
   6. ALERTING SYSTEM

   NOTE: The design and installation of the alerting system shown on sheet E2.5 is proprietary and the Coastside Fire Protection District's sole alerting vendor is Telecommunications Engineering Associates (TEA), 1160 Industrial Rd #15, San Carlos, CA 94070. General Contractor shall contract with TEA for this work. (Bradley Wong, TEA, 650-590-1805, brad@tcomeng.com)
   7. STEEL STAIRS
   8. STAIR HANDRAILS / GUARDRAIL
   9. GENERATOR NOTE: Contractor to obtain encroachment permit from County of San Mateo

RENDERINGS

GOVERNING AGENCIES

COUNTY OF SAN MATEO
PLANNING AND BUILDING DEPARTMENT
400 COUNTY CENTER
REDWOOD CITY, CA 94063
(650) 363-4000

PROJECT TEAM

OWNER

COASTSIDE FIRE PROTECTION DISTRICT
555 OBISPO RD,
HALF MOON BAY, CA 94018
650-726-5213 PH

ARCHITECT

PBK
408 HIGUERA STREET, STE 100
SAN LUIS OBISPO, CA 93401
805-329-3076 PH

CIVIL

MCR ENGINEERING
1242 DUPONT CT,
MANTECA, CA 95336
209-239-6229 PH

ELECTRICAL

A & F ENGINEERING GROUP INC.
9320 BASELINE ROAD, SUITE C
RANCHO CUCAMONGA, CA 91701
909-941-3008 PH

STRUCTURAL

MLA STRUCTURAL ENGINEERS, INC.
1132 SUNCAST LANE, SUITE 6
EL DORADO HILLS, CA 95762
(916) 941-2425 PH

LANDSCAPE ARCHITECT

WDSLA
1631 ALHAMBRA BLVD., SUITE 100
SACRAMENTO, CA 95816
(916) 524-5614 PH

GEOTECHNICAL

GEOCON CONSULTANTS, INC.
6671 BRISA STREET
LIVERMORE, CA 94550
925-371-5900 PH

MECHANICAL / PLUMBING

POCOCK DESIGN SOLUTIONS
14451 CHAMBERS ROAD,
SUITE 210
TUSTIN, CA 92780
949-417-3903 PH

SCOPE OF WORK

THE PROJECT INCLUDES A TWO STORY FIRE STATION BUILDING, CONTAINING LIVING QUARTERS, APPARATUS BAY, TECHNICAL SUPPORT AREAS, AND OTHER NECESSARY FACILITIES.

THE SITE INCLUDES THE FIRE STATION STRUCTURE, ADEQUATE PARKING FOR PERSONNEL, FRONT APRON, LANDSCAPING, AND ENTRY PATIO. THE BUILDING DESIGN REFLECTS THE PROJECT'S RESIDENTIAL LOCATION BY APPROPRIATELY ADDRESSING SITE ACCESS, PEDESTRIAN AND VEHICULAR SAFETY, AESTHETICS, AND BUILDING MASS AND SCALE.

VICINITY MAP

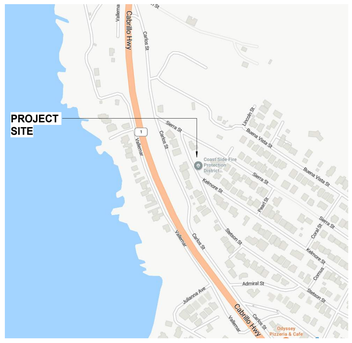
PROJECT SITE
Cabrillo Hwy
Coastside Hwy
Coast Side Fire Protection District Station 44
Airport St
Cypress Ave
Francis St
Stanley St
Cypress St
Sierra St
Sierra Ct
Alpine Rd
Alpine Ct
Cypress Ct
Redwood St
Redwood Ct
Redwood Way
Redwood Ave
Redwood Cir
Redwood Dr
Redwood Pl
Redwood Ln
Redwood Terr
Redwood Trl
Redwood Vista Dr
Redwood Vista Ct
Redwood Vista Pl
Redwood Vista Ln
Redwood Vista Trl
Redwood Vista Terr
Redwood Vista Cir
Redwood Vista Ave
Redwood Vista Way
Redwood Vista Rd
Redwood Vista St

DRAWING CONVENTIONS

1 / A101	ENLARGED PLAN / DETAIL ENLARGEMENT
1 / A6.00	EXTERIOR ELEVATION
1 / A7.10	BUILDING SECTION
1 / A7.10	WALL SECTION
1 / A9.00	DETAIL SECTION
A B C D 106 / A6.00	INTERIOR ELEVATIONS
ROOM NAME	ROOM NAME & NUMBER
1 / A2.00	MATCH LINE
NAME ELEVATION	FLOOR / DATUM LINE
A	GRID / COLUMN LINE
A	EXISTING GRID / COLUMN LINE
	NEW PARTITION
S6.1 C.10	PARTITION TYPE *REFER TO SHEET* ***A7.00*** *FOR DEFINITION*
	EXISTING PARTITION
106B	DOOR DESIGNATION
A	WINDOW DESIGNATION
6'-6" 5'-6" 12'-0"	DIMENSIONS *NOTE: ALL DIMENSIONS TO FACE OF STUD / ℄ OF COLUMN UNLESS NOTED OTHERWISE*
302 3FDW36"	W.I. CABINET REFERENCE *WIDTH x DEPTH x HEIGHT*
TA3	EQUIPMENT DESIGNATION
09 21.00	CONSTRUCTION KEYNOTE
D.00	DEMOLITION KEYNOTE
	REVISION / REVISION NUMBER
REFERENCE NORTH / TRUE NORTH	NORTH ARROWS

SHEET NUMBERING

A2.1

DRAWING NUMBER

SHEET TYPE

1 - SITE PLANS / DETAILS
2 - FLOOR PLANS
3 - REFLECTED CEILING PLAN
4 - ROOF PLANS
5 - EXTERIOR ELEVATIONS / SECTIONS
6 - ENLARGED FLOOR PLANS
7 - INTERIOR PLANS / ELEVATIONS
8 - DOOR / WINDOW SCHEDULE / DETAILS
9 - EXTERIOR DETAILS
10 - FLOOR FINISH PLANS / INTERIOR DETAILS

DISCIPLINE

G - GENERAL
C - CIVIL
L - LANDSCAPE
D - DEMO
A - ARCHITECTURAL
S - STRUCTURAL
M - MECHANICAL
P - PLUMBING
FP - FIRE PROTECTION
E - ELECTRICAL
T - TECHNOLOGY
FA - FIRE ALARM

FIRE SPRINKLER NOTES

1. AN APPROVED FIRE SPRINKLER SYSTEM SHALL BE INSTALLED THROUGHOUT THE FIRE HOUSE. IN NEW OFFICE PORTION OF THE BUILDING SHELL AND IN THE APPARATUS BAY THE AUTOMATIC FIRE SPRINKLER SYSTEM SHALL BE DESIGNED TO :18 GPM/3,000 SF OF COVERAGE AREA. FIRE SPRINKLER SYSTEM TO COMPLY WITH NFPA 13 2013 EDITION. A SEPARATE PLAN REVIEW FEE WILL BE COLLECTED UPON REVIEW OF THESE PLANS.
   1.1. EACH FLOOR LEVEL SHALL HAVE A DEDICATED SPRINKLER RISER ASSEMBLY INSTALLED ENABLING FIRE DEPARTMENT PERSONNEL DIRECT ACCESS
2. AN APPROVED FIRE ALARM SYSTEM IS REQUIRED TO BE DESIGNED TO PROVIDE WATER-FLOW & TAMPER CONTROL MONITORING BY AN OFF-SITE MONITORING COMPANY. A MINIMUM OF TWO SETS OF PLANS, SPECIFICATIONS AND OTHER INFORMATION PERTINENT TO THE SYSTEM MUST BE SUBMITTED TO THE COASTSIDE FIRE PROTECTION DISTRICT FOR REVIEW AND APPROVAL PRIOR TO INSTALLATION. A SEPARATE PLAN REVIEW FEE WILL BE COLLECTED UPON REVIEW OF THESE PLANS:
   2.1 FIRE ALARM SYSTEMS SHALL BE U.L. CERTIFICATED, CERTIFICATE OF COMPLETION AND OTHER DOCUMENTATION LISTING THE NATIONAL FIRE ALARM CODE SHALL BE PROVIDED FOR ALL NEW FIRE ALARM SYSTEM INSTALLATIONS.
   2.2 WATER-FLOW BELL TO NOTIFY THOSE IN SLEEPING ROOMS ON THE 2ND LEVEL AT THE STAIRWELL.
3. A MINIMUM 2A 10BC RATED FIRE EXTINGUISHER SHALL BE LOCATED AT OR NEAR EXITS AND SHALL BE PLACED SO THAT THE TRAVEL DISTANCE TO A FIRE EXTINGUISHER SHALL NOT EXCEED 75 FEET. VERIFY WITH FIRE INSPECTOR AT THE TIME OF ROUGH INSPECTION TO ASSIST WITH PLACEMENT OF EXTINGUISHER(S) DIRECT ACCESS TO THE SPRINKLER RISER ASSEMBLY SHALL REQUIRE SIGNAGE ON THE DOOR ACCESSING RISER STATING - "RISER ROOM" OR AGREED UPON LANGUAGE.

ABBREVIATIONS

A.F.F.	ABOVE FINISH FLOOR
A.F.G.	ABOVE FINISH GRADE
A.H.J.	AUTHORITY HAVING JURISDICTION
AC	ASPHALT CONCRETE PAVEMENT
ACC	ACCESSIBLE, ACCESSIBILITY
ACP	ACOUSTICAL PANEL
ACT	ACOUSTICAL TILE
AD	AREA DRAIN
ADA	AMERICANS WITH DISABILITIES ACT
ADA	2010 ADA STANDARDS FOR ACCESSIBLE DESIGN
ADAAG	AMERICANS WITH DISABILITIES ACT ACCESSIBILITY GUIDELINES
ADJ	ADJACENT
ALT	ALTERNATE
ALUM	ALUMINUM
ASPH	ASPHALT
B.O.D.	BOTTOM OF DECK
BD	BOARD
BLDG	BUILDING
BLK	BLOCK
BM	BEAM
BUR	BUILT-UP ROOF
C	CHANNEL
CAB, CABT	CABINET
CBC	CALIFORNIA BUILDING CODE / TITLE 24, CALIFORNIA CODE OF REGULATIONS
CFMF	COLD-FORMED METAL FRAMING
CFSF	COLD-FORMED STEEL FRAMING
CJ	CONTROL JOINT
CL	CENTERLINE
CLG	CEILING
CLR	CLEAR
CMU	CONCRETE MASONRY UNIT
COL	COLUMN
COMP	COMPRESSIBLE
CONC	CONCRETE
COND	CONDITION
CONT	CONTINUOUS
CORR	CORRIDOR
CPT	CARPET (ED)
CT	CERAMIC TILE
CTSK	COUNTER SINK
CW	COLD WATER
D	DRYER
D.A.	DISABLED ACCESS(IBILITY)
DF	DRINKING FOUNTAIN
DIA / Ø	DIAMETER
DIM	DIMENSION
DS	DOWNSPOUT
DTL	DETAIL
DWG	DRAWING
EA	EACH
EJ	EXPANSION JOINT
EL	ELEVATION (HEIGHT)
ELEC	ELECTRICAL
ELECT	ELECTRICAL
ELEV	ELEVATION (DRAWING)
EQ	EQUAL
EQUIP	EQUIPMENT
EXIST	EXISTING
EXP	EXPANSION
EXT	EXTERIOR
FD	FLOOR DRAIN
FE	FIRE EXTINGUISHER
FEC	FIRE EXTINGUISHER CABINET
FHC	FIRE HOSE CABINET
FIN	FINISH (ED)
FIXT	FIXTURE
FLR	FLOOR (ING)
FLUOR	FLUORESCENT
FRP	FIBER-REINFORCED PLASTIC
GA	GAUGE
GALV	GALVANIZED
GCMU	GLAZED CONCRETE MASONRY UNIT
GEN	GENERAL
GI	GALVANIZED IRON
GL	GLASS / GLAZING
GL	GLASS
GR	GRADE
GTP	GLAZED TILE PAVER
GYP	GYPSUM DRYWALL
HM	HOLLOW METAL FRAME
HORIZ	HORIZONTAL
HT	HEIGHT
HVAC	HEATING, VENTILATION, AIR CONDITIONING
HW	HOT WATER
ID	INSIDE DIAMETER
INSUL	INSULATE (ED), (ION)
INT	INTERIOR
IPS	IRON PIPE SIZE
JT	JOINT
LA	LANDSCAPED AREA
LAM	LAMINATE (D)
LAV	LAVATORY
LT	LIGHT
LT WT	LIGHTWEIGHT
M.O.	MASONRY OPENING
MAS	MASONRY
MATL	MATERIAL (S)
MAX	MAXIMUM
MB	MARKER BOARD
MECH	MECHANICAL
MEP	MECHANICAL, ELECTRICAL, PLUMBING
MEPT	MECHANICAL, ELECTRICAL, PLUMBING, TECHNOLOGY
MEZZ	MEZZANINE
MFR / MANUF	MANUFACTURE (R)
MIN	MINIMUM
MISC	MISCELLANEOUS
MOD	MODULAIR
MTL	METAL
N.I.C.	NOT IN CONTRACT
N.T.S.	NOT TO SCALE
NO.	NUMBER
NOM	NOMINAL
O.C.	ON CENTER (S)
O.C.E.W.	ON CENTER EACH WAY
O.D.	OUTSIDE DIAMETER
O.H.	OPPOSITE HAND
OFCI	OWNER FURNISHED, CONTRACTOR INSTALLED
OPNG	OPENING
OPP	OPPOSITE
P LAM / PLAM	PLASTIC LAMINATE
PCC	PORTLAND CEMENT CONCRETE PAVING
PL	PLATE
PLUMB	PLUMBING
POL	POLISHED
PR	PAIR
PREFIN	PRE-FINISHED
PT	POINT
PT	PRESSURE-TREATED
PTD	PAINTED
PWD / PLYWD	PLYWOOD
QT	QUARRY TILE
R / RAD	RADIUS
RCP	REFLECTED CEILING PLAN
RD	ROOF DRAIN
RE / REF	REFER TO / REFERENCE / SEE
RECP	RECEPTACLE
REINF	REINFORCE (D), (ING)
REQ'D	REQUIRED
RES	RESILIENT
REV	REVISION (S), REVISED
SC	SEALED CONCRETE
SCHED	SCHEDULE
SD	SOAP DISPENSER
SECT	SECTION
SHT	SHEET
SIM	SIMILAR
SND	SANITARY NAPKIN DISPOSAL
SPC	SPECIAL COATING SYSTEM
SPEC	SPECIFICATION (S)
SQ	SQUARE
SS	STAINLESS STEEL
STL	STEEL
STR / STRUCT	STRUCTURAL
SUSP	SUSPENDED
SVF	SHEET VINYL FLOORING
T.O.	TOP OF
T.O.M.	TOP OF MASONRY
T.O.P.	TOP OF PARAPET
T.O.S.	TOP OF STEEL
TB	TACK BOARD
TEL	TELEPHONE
TERR	TERRAZZO
THK	THICK (NESS)
TYP	TYPICAL
U.N.O.	UNLESS NOTED OTHERWISE
UR	URINAL
V	VENT
V.I.F.	VERIFY IN FIELD
VCT	VINYL COMPOSITION TILE
VENT	VENTILATING, VENTILATED
VER	VERIFY
VERT	VERTICAL
VWC	VINYL WALL COVERING
W.O.	WHERE OCCURS
W/	WITH
WC	WATER CLOSET
WD	WOOD
WDW	WINDOW
WT	WEIGHT
WWF	WELDED WIRE FABRIC
WWM	WOVEN WIRE MESH
∠	ANGLE

DRAWING INDEX

GENERAL

G0.00	TITLE SHEET
G0.10	SHEET INDEX & DRAWING CONVENTIONS
G0.20	CODE ANALYSIS-FLOOR PLAN
G0.30	ACCESSIBILITY GUIDELINES
G0.32	CHECKLISTS COMPLIANCE CALGREEN
G0.33	CHECKLISTS COMPLIANCE CALGREEN
G0.34	CHECKLISTS COMPLIANCE CALGREEN
G0.35	CHECKLISTS COMPLIANCE CALGREEN

CIVIL *

C1	GENERAL NOTES AND SPECIFICATIONS
C1.1	CONSTRUCTION DETAILS
C1.2	MWSD CONSTRUCTION STANDARD DETAILS
C1.3	MWSD CONSTRUCTION STANDARD DETAILS Copy 1
C2	TOPOGRAPHIC SURVEY AND DEMOLITION PLAN
C3	DIMENSION AND PAVING PLAN
C4	GRADING PLAN
C5	UTILITY PLAN
C6	EROSION CONTROL
C7	STORMWATER CONTROL PLAN
C8	EROSION CONTROL

RETAINING WALL DRAWINGS

SS-001	GENERAL NOTES
SS-002	GENERAL NOTES
SS-003	TYPICAL DETAILS
SS-201	PERMANENT WALL PLAN & SECTIONS
SS-301	PERMANENT WALL ELEVATIONS

LANDSCAPE *

L1.0	PLANTING PLAN & NOTES
L1.1	PLANTING DETAILS
L2.0	IRRIGATION PLAN & NOTES
L2.1	IRRIGATION DETAILS
L2.2	IRRIGATION DETAILS
L2.3	IRRIGATION DETAILS

DEMOLITION

D1.1	DEMOLITION SITE PLAN

ARCHITECTURAL

A1.1.0	PROPOSED SITE PLAN
A1.1.1	SITE - ENLARGED PLANS
A1.2	SITE DETAILS
A1.3	SITE DETAILS
A1.4	EXPANSION AND CONTROL JOINT PLAN
A2.1	DIMENSION FLOOR PLANS
A2.2	ARCHITECTURAL FLOOR PLANS
A3.1	REFLECTED CEILING PLAN
A4.1	ROOF PLAN
A5.1	EXTERIOR ELEVATIONS
A5.2	BUILDING SECTIONS
A5.3	BUILDING SECTIONS
A6.1	ENLARGED PLANS
A6.2	ENLARGED PLANS
A7.1	INTERIOR ELEVATIONS
A7.2	INTERIOR ELEVATIONS
A7.3	WALL SECTIONS
A8.1	DOOR & WINDOW SCHEDULES
A8.2	EXTERIOR DOOR & WINDOW DETAILS
A8.3	DOOR & WINDOW DETAILS
A9.1	EXTERIOR DETAILS
A9.2	ROOF DETAILS
A9.3	WALL TYPES & DETAILS
A9.4	SUSPENDED CEILING DETAILS
A9.5	SUSPENDED CEILING DETAILS
A9.6	SPECIALTY DETAILS
A9.7	SPECIALTY DETAILS
A9.8	STAIR DETAILS
A10.1	FLOOR FINISH PLAN & SCHEDULE
A10.2	INTERIOR / SPECIALTY
A10.3	INTERIOR / SPECIALTY
A10.4	MILLWORK DETAILS AND SCHEDULES
A10.5	MILLWORK DETAILS AND SCHEDULES

STRUCTURAL *

S1.1	TYPICAL NOTES
S1.2	TYPICAL DETAILS
S1.3	TYPICAL DETAILS
S1.4	TYPICAL DETAILS
S1.5	TYPICAL DETAILS
S2.1	FOUNDATION PLAN
S2.1A	SLAB POUR SEQUENCING & SLAB JOINT PLANS
S2.2	SECOND FLOOR & LOW ROOF FRAMING PLAN
S2.2A	DIPHRAGM REINFORCING & METAL DECK PLANS
S2.3	ROOF FRAMING PLAN
S2.4	CEILING FRAMING PLANS
S3.1	SECTIONS
S3.2	SECTIONS
S3.3	SECTIONS
S4.1	DETAILS
S4.2	SECTIONS
S5.1	SECTIONS
S5.2	SECTIONS
S5.3	SECTIONS
S5.4	SECTIONS
S6.1	DETAILS
S6.2	DETAILS
S6.3	DETAILS
S6.4	DETAILS
S6.5	DETAILS
S6.6	DETAILS
S6.7	DETAILS
S6.8	DETAILS
S6.9	DETAILS
S6.10	DETAILS

MECHANICAL *

M0.1	MECHANICAL LEGEND, AND GENERAL NOTES,
M0.2	MECHANICAL FIXTURE SCHEDULES
M2.1	MECHANICAL FIRST FLOOR PLAN
M2.1P	MECHANICAL PIPING FIRST FLOOR PLAN
M2.2	MECHANICAL SECOND FLOOR PLAN
M2.2P	MECHANICAL PIPING SECOND FLOOR PLAN
M3.1	MECHANICAL ROOF PLAN
M5.1	MECHANICAL DETAILS
M5.2	MECHANICAL DETAILS
M5.3	MECHANICAL DETAILS
M5.4	TITLE 24 COMPLIANCE FORMS
M5.5	TITLE 24 COMPLIANCE FORMS

PLUMBING *

P0.1	PLUMBING LEGEND, SCHEDULES, AND GENERAL NOTES
P0.2	PLUMBING FIXTURE SCHEDULES
P1.1	PLUMBING SITE PLAN
P2.1	PLUMBING FIRST FLOOR PLAN
P2.2	PLUMBING SECOND FLOOR PLAN
P3.1	PLUMBING ROOF PLAN
P4.1	PLUMBING ENLARGED PLANS
P4.2	PLUMBING ENLARGED PLANS
P5.1	PLUMBING DETAILS
P5.2	PLUMBING DETAILS

ELECTRICAL *

E0.1	GENERAL NOTES AND SYMBOL LIST
E0.2	SINGLE LINE DIAGRAM AND PANEL SCHEDULES
E0.3	FIXTURE SCHEDULE
E0.4	TITLE 24 COMPLIANCE FORMS
E0.5	TITLE 24 COMPLIANCE FORMS
E0.6	TITLE 24 COMPLIANCE FORMS
E1.1	SITE PLAN
E1.1P	PHOTOMETRIC SITE PLAN
E1.1EP	EMERGENCY PHOTOMETRIC SITE PLAN
E2.1	LIGHTING PLANS
E2.2	POWER PLANS
E2.3	SIGNAL PLANS
E2.4	MECHANICAL POWER PLANS
E2.5	ALERTING PLANS
E2.6	ROOF PLAN
E3.1	ELECTRICAL DETAILS

PBK

ARCHITECT PBK Architects, Inc.
PBK.com
SAN LUIS OBISPO
408 Higuera Street, Ste 100
San Luis Obispo, CA 93401
805-329-3076

FIRE STATION #44
COASTSIDE FIRE PROTECTION DISTRICT

501 STETSON STREET
MOSS BEACH, CA 94038
PLAN CHECK 02 RESPONSE

BID SET

1ST 2ND

KEY PLAN

PLAN NORTH TRUE NORTH

This document is for plan review only

CLIENT
COASTSIDE FIRE PROTECTION DISTRICT
PROJECT NUMBER
230137
DATE 03/13/2026
DRAWN BY: KF/OS CHKED BY: AD
REVISIONS

#	DESCRIPTION	DATE

SHEET INDEX & DRAWING CONVENTIONS

G0.10

8/25/2026 6:20:48 PM

G0.20 - CODE ANALYSIS-FLOOR PLAN

2022 CBC SECTION 1004 OCCUPANT LOAD

1004.1 Design occupant load. In determining means of egress requirements, the number of occupants for whom means of egress facilities shall be provided shall be determined in accordance with this section.

1004.2 Cumulative occupant loads. Where the path of egress travel includes intervening rooms, areas or spaces, cumulative occupant loads shall be determined in accordance with this section.

1004.2.1 Intervening spaces or accessory areas. Where occupants egress from one or more rooms, areas or spaces through others, the design occupant load shall be the combined occupant load of interconnected accessory or intervening spaces. Design of egress path capacity shall be based on the cumulative portion of occupant loads of all rooms, areas or spaces to that point along the path of egress travel.

1004.2.2 Adjacent levels for mezzanines. That portion of occupant load of a mezanine with all required egress through a room, area or space on an adjacent level shall be added to the occupant load of that room, area or space.

1004.2.3 Adjacent stories. Other than for the egress components designed for convergence in accordance with Section 1005.6, the occupant load from separate stories shall not be added.

1004.5 Areas without fixed seating. The number of occupants shall be computed at the rate of one occupant per unit of area as prescribed in Table 1004.1.2. For areas without fixed seating, the occupant load shall not be less than that number determined by dividing the floor area under consideration by the occupant load factor assigned to the function of the space as set forth in Table 1004.1.2. Where an intended function is not listed in Table1004.1.2, the building official shall establish a function based on a listed function that most nearly resembles the intended function.

Exception: Where approved by the building official, the actual number of occupants for whom each occupied space, floor or building is designed, although less than those determined by calculation, shall be permitted to be used in the determination of the design occupant load.

MAX. DIAGONAL DISTANCE OF 2ND FLOOR = 93'-6".

MIN. REQUIRED DIAGONAL DISTANCE BETWEEN TOP OF RISER = (93'-6"/3) = 31'-2"

TOP RISER: 37'-3" > 31'-2" = OK
BOTTOM RISER: 31'-3" > 31'-2" = OK

EXIT ACCESS TRAVEL DISTANCE (TABLE 1017.2)
TOTAL DISTANCE = 147' 4"
ALLOWABLE DISTANCE= 250'

EXIT ACCESS TRAVEL DISTANCE (TABLE 1017.2)
TOTAL DISTANCE = 76' 11"
(SEE 2ND FLOOR FOR CONTINUATION)
ALLOWABLE DISTANCE= 250'

EXIT ACCESS TRAVEL DISTANCE (TABLE 1017.2)
TOTAL DISTANCE = 123' 9"
ALLOWABLE DISTANCE= 250'

DIRECTIONAL EXIT ROUTE SIGNAGE PER 17/A9.7

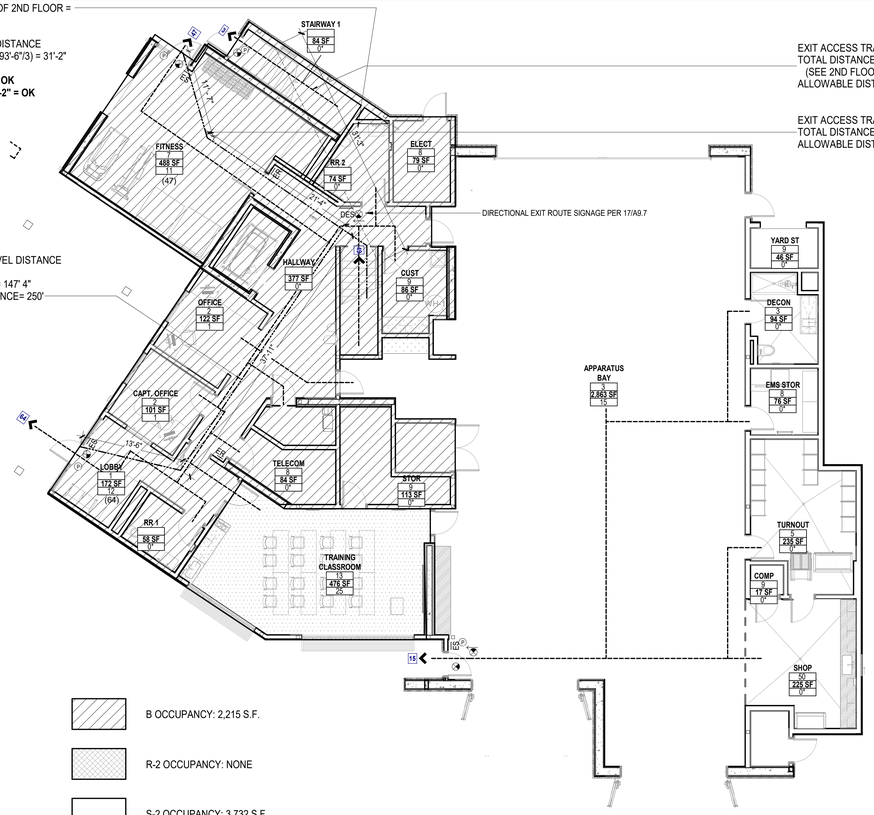

SPACE USE AND OCCUPANT LOAD SCHEDULE FACTOR
(BASED ON 2022 CBC TABLE 1004.5)

1. LOBBY, 15 S.F./OCC.
2. OFFICE, 150 S.F./OCC..
3. APPARATUS ROOM, 200 S.F./OCC.
4. DORMITORY, 1BED/OCC.
5. TURN-OUT/CREW LOCKERS, 50 S.F./OCC.
6. WORKSHOP, 50 S.F./OCC.
7. EXERCISE ROOM, 50 S.F./OCC.
8. ELECTRICAL/ MECH. ROOM, 300 S.F./OCC.
9. STORAGE, 300 S.F./OCC.
10. DINING ROOM, 15 S.F./OCC.
11. KITCHEN, 200 S.F./OCC.
12. DAY ROOM, 15 S.F./OCC.
13. CLASSROOM, 20 S.F./OCC.
14. COVERED DECK/PATIO, 15 S.F./OCC.

B OCCUPANCY: 2,215 S.F.

R-2 OCCUPANCY: NONE

S-2 OCCUPANCY: 3,732 S.F.

A-3 OCCUPANCY: 476 S.F.

FIRE STATION NO. 44 - 1ST FLOOR
GROSS AREA: 7,025 S.F.

1 FIRST FLOOR CODE ANALYSIS PLAN
SCALE: 1/8" = 1'-0"

EGRESS NOTES:

A. EXIT SIGNS SHALL BE INTERNALLY OR EXTERNALLY ILLUMINATED

B. EXIT SIGNS ILLUMINATED BY AN EXTERNAL SOURCE SHALL HAVE AN INTENSITY OF NOT LESS THAN 5 FOOT CANDLES (54 LUX).

C. INTERNALLY ILLUMINATED SIGNS SHALL BE LISTED AND LABELED AND SHALL BE INSTALLED IN ACCORDANCE WITH THE MANUFACTURER'S INSTRUCTIONS AND SECTION 2702.

D. EXIT SIGNS SHALL BE ILLUMINATED AT ALL TIMES.

E. EXIT SIGNS SHALL BE CONNECTED TO AN EMERGENCY POWER SYSTEM THAT WILL PROVIDE AN ILLUMINATION OF NOT LESS THAN 90 MIN. IN CASE OF PRIMARY POWER LOSS.

F. EGRESS DORRS SHALL BE READILY OPENABLE FROM THE EGRESS SIDE WITHOUT THE USE OF A KEY OR SPECIAL KNOWLEDGE OR EFFORT. SEE 1008.1.8.3 FOR EXCEPTIONS.

G. DOOR HANDLES, LOCK AND OTHER OPERATING DEVICES SHALL BE INSTALLED AT A 44" ABOVE THE FINISHED FLOOR.

H. ALL EGRESS DOOR OPERATION SHALL ALSO COMPLY WITH SECTION 1008.1.9-1008.1.9.7.

I. THE MEANS OF EGRESS, INCLUDING THE EXIT DISCHARGE, SHALL BE ILLUMINATED AT ALL TIMES THE BUILDING SPACE SERVED BY THE MEANS OF EGRESS IS OCCUPIED. THE MEANS OF EGRESS ILLUMINATION LEVEL SHALL NOT BE LESS THAN 1 FOOT-CANDLE AT THE WALKING SURFACE. (1006.1)

J. THE POWER SUPPLY FOR MEANS OF EGRESS ILLUMINATION SHALL NORMALLY BE PROVIDED BY THE PREMISES' ELECTRICAL SUPPLY. IN THE EVENT OF POWER SUPPLY FAILURE, AN EMERGENCY ELECTRICAL SYSTEM SHALL AUTOMATICALLY ILUMINATE THE FOLLOWING AREAS:

A) AISLES AND UNENCLOSED EGRESS STAIRWAYS IN ROOMS AND SPACES THAT REQUIRE TWO OR MORE MEANS OF EGRESS.

B) CORRIDORS, EXIT ENCLOSURES AND EXIT PASSAGEWAYS IN BUILDINGS REQUIRED TO HAVE TWO OR MORE EXITS.

C) EXTERIOR EGRESS COMPONENTS AT OTHER THAN THE LEVEL OF EXIT DISCHARGE UNTIL EXIT DISCHARGE IS ACCOMPLISHED FOR BUILDINGS REQUIRED TO HAVE TWO OR MORE EXITS.

D) INTERIOR EXIT DISCHARGE ELEMENTS, AS PERMITTED IN SECTION 1027.1, IN BUILDINGS REQUIRED TO HAVE TWO OR MORE EXITS.

E) EXTERIOR LANDINGS, AS REQUIRED BY SECTION 1008.1.6, FOR EXIT DISCHARGE DOORWAYS IN BUILDINGS REQUIRED TO HAVE TWO OR MORE EXITS.

K. THE EMERGENCY POWER SYSTEM SHALL PROVIDE POWER FOR A DURATION OF NOT LESS THAN 90 MINUTES AND SHALL CONSIST OF STORAGE BATTERIES, UNIT EQUIPMENT OR AN ON-SITE GENERATOR. THE INSTALLATION OF THE EMERGENCY POWER SYSTEM SHALL BE IN ACCORDANCE WITH SECTION 2702. (1006.3)

L. EMERGENCY LIGHTING FACILITIES SHALL BE ARRANGED TO PROVIDE INITIAL ILLUMINATION THAT IS AT LEAST AN AVERAGE OF 1 FOOT-CANDLE (11LUX) AND A MINIMUM AT ANY POINT OF 0.1 FOOT-CANDLE (1LUX) MEASURED ALONG THE PATH OF AGRESS AT FLOOR LEVEL. ILLUMINATION LEVELS SHALL BE PERMITTED TO DECLINE TO 0.6 FOOT-CANDLE (6 LUX) AVERAGE AND A MINIMUM AT ANY POINT OF 0.06 FOOT-CANDLE (0.6 LUX) AT THE END OF THE EMERGENCY LIGHTING TIME DURATION. A MAXIMUM-TO-MINIMUM ILLUMINATION UNIFORMITY RATIO OF 40 TO 1 SHALL NOT BE EXCEEDED. (1006.3)

M. THE EXIT SIGNS SHALL ALSO BE CONNECTED TO AN EMERGENCY ELECTRICAL SYSTEM PROVIDED FROM STORAGE BATTERY UNIT EQUIPMENT OR AN ONSITE GENERATOR SET, AND THE SYSTEM SHALL BE INSTALLED IN ACCORDANCE WITH THE ELECTRICAL CODE. FOR HIGH RISE BUILDINGS, SEE SECTION 403.

PLUMBING FIXTURE COUNT ANALYSIS

MAXIMUM OCCUPANT LOAD PER CPC TABLE 4-1

GROUP R-2	6(1,118 SF)	(200 SF/OCC.)
GROUP S-2	1(3,732 SF)	(4000 SF/OCC.)
GROUP B	26(3,813 SF)	(150 SF/OCC.)
GROUP A-3	38(1,135 SF)	(30 SF/OCC.)

PLUMBING FIXTURES PER 2022 CPC TABLE 422.1 (R-2 MOST RESTRICTIVE):

FIXTURES	REQUIRED	PROVIDED
WATER CLOSET:		
MALE	3	6 UNISEX
FEMALE	3	6 UNISEX
LAVATORY:		
MALE	3	6 UNISEX
FEMALE	3	6 UNISEX
DRINKING FOUNTAIN	1	1**
SHOWER	1	4
MOP SINK	1	1

*PER CPC 422.2 EXCEPTION 1, SEPARATE TOILET FACILITIES FOR EACH SEX ARE NOT REQUIRED IN RESIDENTIAL INSTALLATIONS
*PER CPC 422.2 EXCEPTION 3, SEPARATE TOILET FACILITIES FOR EACH SEX ARE NOT REQUIRED IN BUSINESS OCCUPANCIES WITH A TOTAL OCCPANT LOAD OF 50 OR LESS.
**WATER STATIONS INCLUDED AT ALL THREE REFRIGERATORS IN LIEU OF DRINKING FOUNTAIN

AREA IDENTITY

ROOM NAME / 3 / 100 / 0" — SPACE USE - REFER TO SCHEDULE; FLOOR AREA IN SQUARE FEET; OCCUPANT LOAD

NOTE:
* (ASTERISK) INDICATES ACCESSORY USE OCCUPANCY
AND IS EXCLUDED FROM EGRESS CALCULATIONS

(P) — PANIC HARDWARE - REF. DOOR SCHEDULE & HARDWARE GROUP

ILLUMINATED EXIT SIGN, DIRECTIONAL AS OCCURS - REF. ELECT. DWGS.

DES — DIRECTIONAL EXIT ROUTE SIGN - REF. 17/A9.7

ER — EXIT ROUTE SIGN - REF. 16/A9.7

ES — TACTILE EXIT SIGN - REF. 15/A9.7

9 — PATH OF EGRESS (NUMBER INDICATES OCCUPANT LOAD)

1-HR RATED

NON-RATED PROTECTION (CBC SECTION 509.4.2)

EGRESS BEGIN

EXITING ANALYSIS
(BASED ON 2022 CBC, SECTION 1005.3.2)

PROPOSED TOTAL OCCUPANTS:	109
EGRESS WIDTH REQUIRED PER CBC 1005.3.2 (SEE NOTE 1):	22 INCH
EGRESS WIDTH REQUIRED PER CBC TABLE 1020.3:	44 INCH
EGRESS WIDTH PROVIDED:	56 INCH MIN. WIDTH HALLWAYS / STAIRWAYS 36 INCH MIN. WIDTH DOORWAYS

1. EGRESS WIDTH: 0.2 INCH PER OCCUPANT (2022 CBC, SECTION 1005.3.2)

EXIT ACCESS TRAVEL DISTANCE (TABLE 1017.2)
TOTAL DISTANCE = 76' 11" (SEE 1st FLOOR FOR CONTINUATION)
ALLOWABLE DISTANCE= 250'

MAX. DIAGONAL DISTANCE OF 2ND FLOOR = 93'-6".

MIN. REQUIRED DIAGONAL DISTANCE BETWEEN TOP OF RISER = (93'-6"/3) = 31'-2"

TOP RISER: 37'-3" > 31'-2" = OK
BOTTOM RISER: 31'-3" > 31'-2" = OK

EXIT ACCESS TRAVEL DISTANCE (TABLE 1017.2)
TOTAL DISTANCE = 123' 9"
ALLOWABLE DISTANCE= 250'

**REVERSE OSMOSIS DRINKING WATER PROVIDED AT SINKS

KITCHEN = 200 S.F. / OCC. PER CBC TABLE 1004.5.

DAYROOM / DINING / DECK = 15 S.F. / OCC. PER CBC TABLE 1004.5.

FIXED CHAIRS SEE A6.2

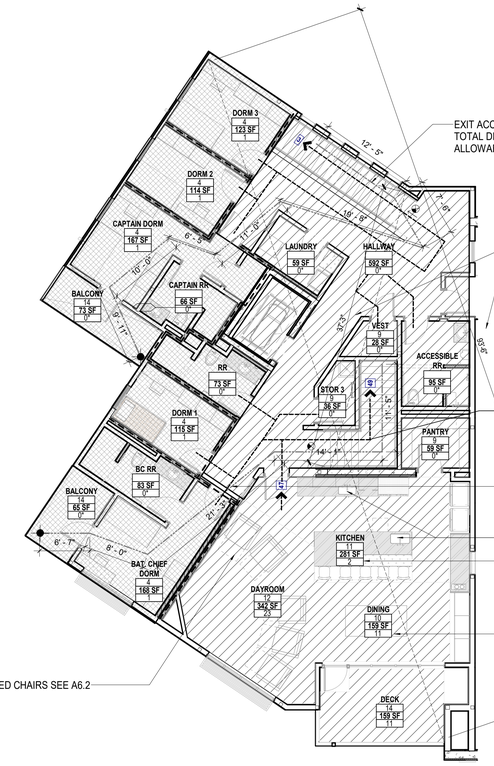

B OCCUPANCY: 2,257 S.F.

R-2 OCCUPANCY: 1,118 S.F.

S-2 OCCUPANCY: NONE

FIRE STATION NO. 44 - 2ND FLOOR
GROSS AREA: 3,375 S.F.

2 SECOND FLOOR CODE ANALYSIS
SCALE: 1/8" = 1'-0"

FIRE STATION NO. 44

OCCUPANCY GROUP (PER CBC 2022):	B, SECTION 304.1 R-2, SECTION 310.3 S-2, SECTION 311.3 A-3, SECTION 303.4
CONSTRUCTION TYPE:	TYPE VB - SPRINKLERED (NFPA 13) (NONSEPARATED)
NUMBER OF STORIES:	2
ACTUAL BLDG. HEIGHT:	32'-6
ALLOWABLE HEIGHT: TABLE No. 504.3	60 FEET (B, S, R-2, A-3 OCCUPANCY)
ALLOWABLE AREA: TABLE No. 506.2	27,000 S.F. (B OCC. [SM-SPRINKLERED]) 21,000 S.F. (R-2 OCC. [SM-SPRINKLERED]) 18,000 S.F. (A-3 OCC. [SM-SPRINKLERED]) - MOST RESTRICT. 40,500 S.F. (S-2 OCC. [SM-SPRINKLERED])
ACTUAL AREA:	4,702 S.F. (FOR B OCCUPANCY) 1,188 S.F. (FOR R-2 OCCUPANCY) 3,962 S.F. (FOR S-2 OCCUPANCY) 548 S.F. (FOR A-3 OCCUPANCY)
TOTAL:	10,400 S.F.
AREA JUSTIFICATION:	10,400 S.F. < 18,000 S.F.
TOTAL OCCUPANTS:	109 TOTAL OCCUPANTS

CODE ANALYSIS NOTES:

THE CODE ANALYSIS IS BASED ON A NONSEPARATED OCCUPANCIES PER 2022 CBC, SECTION 508.3. NO SEPARATION IS REQUIRED BETWEEN OCCUPANCIES PER 2022 CBC, SECTION 508.3.3.

FIRE PARTITIONS ARE PROVIDED FOR THE WALLS SEPARATING SLEEPING UNITS IN THE SAME BUILDING AND WALLS SEPARATING DWELLING OR SLEEPING UNITS FROM OTHER OCCUPANCIES (B, A-3, AND S-2) CONTIGUOUS TO THEM PER 2022 CBC, SECTION 420.2 AND SECTION 508.3.3 EXCEPTION 2.

1/2 HOUR HORIZONTAL SEPARATIONS HAVE BEEN PROVIDED FOR THE PROPOSED FIRE STATION BUILDING BETWEEN R-2 OCCUPANCY AND OTHER OCCUPANCIES (B AND S-2). PER THE EXCEPTION LISTED UNDER 2022 CBC, SECTION 711.2.4.3, HORIZONTAL ASSEMBLY SHALL BE NOT LESS THAN 1/2 HOUR FIRE-RESISTANCE-RATED CONSTRUCTION FOR TYPE VB CONSTRUCTION EQUIPPED THROUGHOUT WITH AN AUTOMATIC FIRE SPRINKLER SYSTEM IN ACCORDANCE WITH SECTION 903.3.1.1.

THE CONSTRUCTION SUPPORTING THE HORIZONTAL ASSEMBLY AT THE SEPARATIONS OF DWELLING UNITS AND SLEEPING UNITS IS NOT REQUIRED TO BE FIRE-RESISTANCE RATED FOR BUILDINGS OF TYPE VB CONSTRUCTION PER 2022 CBC, SECTION 711.2.3 EXCEPTION 2.

THERE WILL BE NO HAZARDOUS MATERIALS STORED OR USED WITHIN BUILDINGS THAT EXCEED 2022 CBC, TABLES 307.1(1) AND 307.1(2)

INTERIOR FINISH SHALL COMPLY WITH 2022 CBC, SECTION 803.1 FLAME SPREAD PROVISIONS.

RATED CORRIDOR IS NOT REQUIRED PER 2022 CBC, TABLE 1020.1: CORRIDOR FIRE-RESISTANCE RATING FOR OCCUPANCY GROUPS B AND S WITH AUTOMATIC FIRE SPRINKLER SYSTEM IS 0 HOURS.

PBK
ARCHITECT PBK Architects, Inc.
PBK.com
SAN LUIS OBISPO
408 Higuera Street, Ste 100
San Luis Obispo, CA 93401
805-329-3076

FIRE STATION #44
COASTSIDE FIRE PROTECTION DISTRICT

501 STETSON STREET
MOSS BEACH, CA 94038
PLAN CHECK 02 RESPONSE

BID SET

1ST 2ND
KEY PLAN
PLAN NORTH TRUE NORTH

CLIENT
COASTSIDE FIRE PROTECTION DISTRICT
PROJECT NUMBER
230137
DATE 03/13/2026
DRAWN BY: KF/OS CHKED BY: AD
REVISIONS

#	DESCRIPTION	DATE

CODE ANALYSIS-FLOOR PLAN

This document is for plan review only

G0.20

9/17/2026 11:51:36 AM

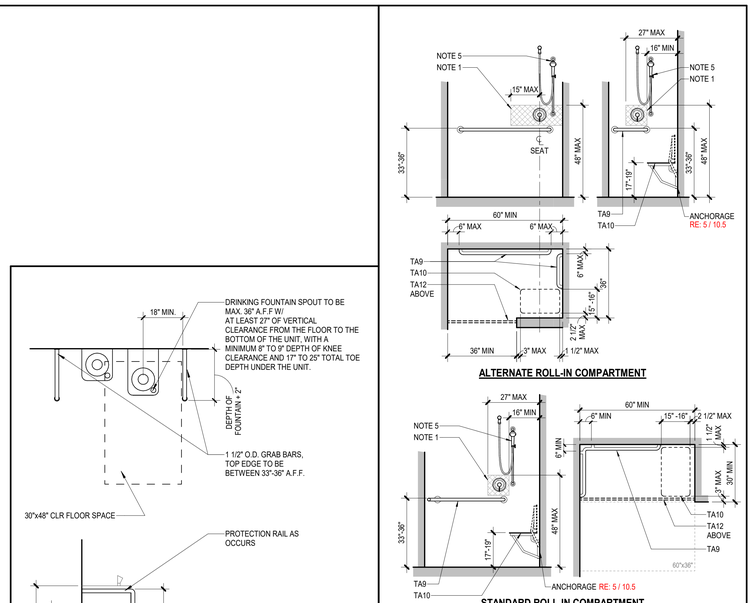

NOTES:
1. LOCATE CONTROLS (MIXING / DIVERTER VALVE) WITHIN THE HATCHED AREA RE CBC 11B-608.5.
2. SPRAY UNIT SHALL HAVE ON/OFF CONTROL WITH NON-POSITIVE SHUT-OFF AND DELIVER WATER THAT IS 120°F(49°C) MAXIMUM.
3. DIMENSIONS AND NOTES REPRESENT THE MINIMUM REQUIREMENTS. ACTUAL INSTALLATION CONFIGURATIONS ARE SHOWN ON THE ENLARGED PLANS.
4. ALL DIMENSIONS TO FACE OF FINISHED SURFACE / CENTERLINE OF FIXTURE U.N.O.
5. HEIGHT ADJUSTABLE FIXED / HAND-HELD SHOWER SPRAY UNIT WITH 59" MINIMUM LENGTH HOSE. RE: PLUMBING FIXTURE SCHEDULE

19 ACCESSIBLE SHOWER COMPARTMENTS
SCALE: 3/8" = 1'-0"

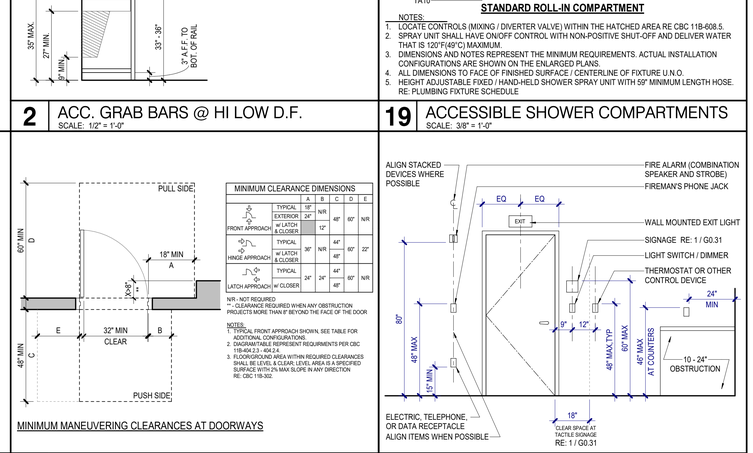

13 MISCELLANEOUS MOUNTING HEIGHTS
SCALE: NOT TO SCALE

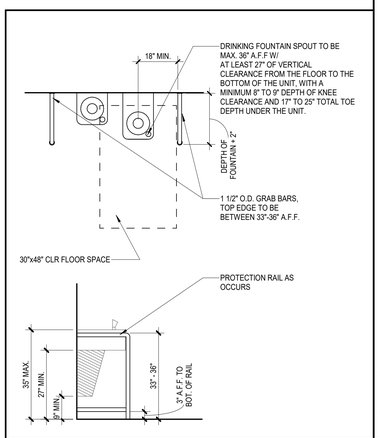

2 ACC. GRAB BARS @ HI LOW D.F.
SCALE: 1/2" = 1'-0"

MINIMUM CLEARANCE DIMENSIONS		A	B	C	D	E
FRONT APPROACH	TYPICAL	18"	N/R	48"	60"	N/R
	EXTERIOR W/ LATCH & CLOSER	24"	12"			
HINGE APPROACH	TYPICAL	36"	N/R	44"	60"	22"
	W/ LATCH & CLOSER			48"		
LATCH APPROACH	TYPICAL	24"	24"	44"	60"	N/R
	W/ CLOSER			48"		

NR - NOT REQUIRED
** - CLEARANCE REQUIRED WHEN ANY OBSTRUCTION PROJECTS MORE THAN 8" BEYOND THE FACE OF THE DOOR

NOTES:
1. TYPICAL FRONT APPROACH SHOWN. SEE TABLE FOR ADDITIONAL CONFIGURATIONS.
2. ADDITIONAL CLEARANCE REQUIREMENTS PER CBC 11B-404.2.3 - 404.2.7.
3. FLOOR/GROUND AREA WITHIN REQUIRED CLEARANCES SHALL BE LEVEL & CLEAR. LEVEL AREA IS A SPECIFIED SURFACE WITH 2% MAX SLOPE IN ANY DIRECTION RE: CBC 11B-302.

MINIMUM MANEUVERING CLEARANCES AT DOORWAYS

14 CLEARANCE AT DOORS
SCALE: NOT TO SCALE

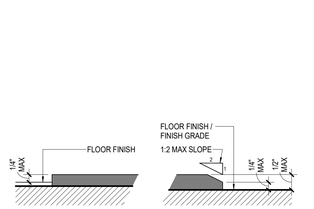

VERTICAL CHANGE IN LEVEL
(WITHOUT EDGE TREATMENT)
PER CBC 11B-303.2

BEVELED CHANGE IN LEVEL
PER CBC 11B-303.3

15 THRESHOLD/TRANSITION REQUIREMENTS
SCALE: NOT TO SCALE

16 ACCESSIBLE SINK CABINET / VANITY
SCALE: NOT TO SCALE

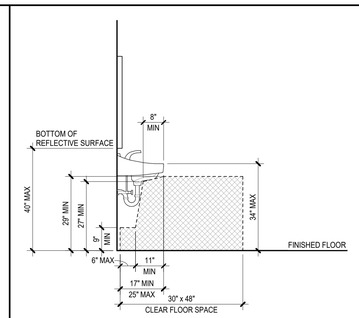

17 ACCESSIBLE LAVATORY
SCALE: NOT TO SCALE

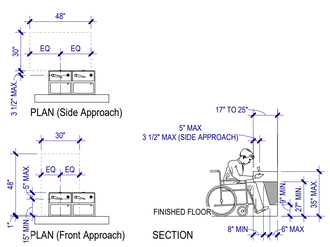

18 ACCESSIBLE DRINKING FOUNTAINS
SCALE: NOT TO SCALE

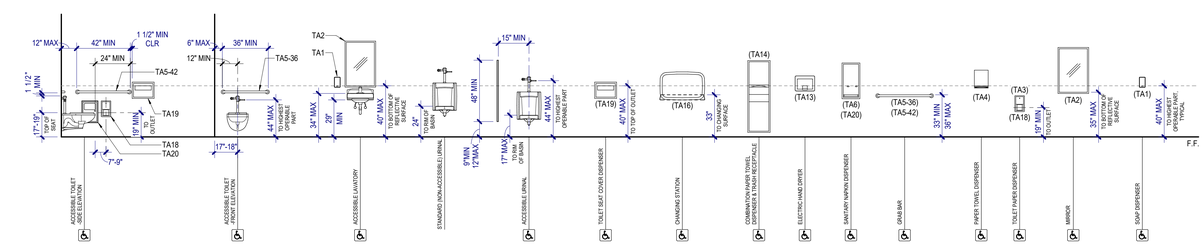

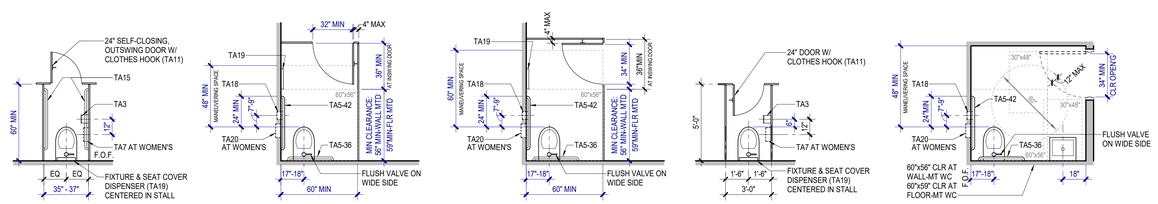

NOTES:
1. ALL DIMENSIONS TO FACE OF FINISHED SURFACE / CENTERLINE OF FIXTURES U.N.O.
2. DIMENSIONS FOR STANDARD STALLS SHALL BE USED ONLY WHERE NOT NOTED ON OTHER DRAWINGS.
3. DIMENSIONS FOR ACCESSIBLE/AMBULATORY STALLS REPRESENT THE MINIMUM REQUIREMENTS. ACTUAL INSTALLATION DIMENSIONS ARE SHOWN ON THE ENLARGED PLANS

01 ACCESSIBLE STANDARDS FOR TOILET FACILITIES
SCALE: 1/4" = 1'-0"

LABEL	DESCRIPTION	REMARKS
TA1	SOAP DISPENSER	
TA2	MIRROR (18"x 36" or 24"x36")	NOTE 5
TA3	TOILET PAPER DISPENSER, RECESSED	
TA4	PAPER TOWEL DISPENSER, SURFACE-MOUNTED	
TA5	GRAB BARS AT TYPICAL ACCESSIBLE TOILET STALLS	
TA7	SANITARY NAPKIN DISPOSAL AND TOILET PAPER DISPENSER	
TA8	MOP & BROOM HOLDER	
TA9	GRAB BARS AT ACCESSIBLE SHOWER	
TA10	FOLDING SHOWER BENCH	
TA11	CLOTHES HOOK	NOTE 6
TA12	SHOWER CURTAIN, ROD AND HOOKS	NOTE 6
		NOTE 7
TA14	COMBO PAPER TOWEL DISPENSER/TRASH RECEPTACLE	
TA17	TRASH RECEPTACLE	
TA20	SANITARY NAPKIN DISPOSAL, RECESSED	

NOTES:
1. ALL TOILET ACCESSORIES SHALL BE CONTRACTOR FURNISHED AND INSTALLED UNLESS NOTED OTHERWISE.
2. COORDINATE FINAL LOCATIONS WITH ARCHITECT PRIOR TO INSTALLATION.
3. CONTRACTOR IS TO VERIFY ALL HEIGHTS OF ACCESSORIES TO COMPLY WITH ADA.
4. REFER TO ALL FINISHES AND COLORS IN FINISH SCHEDULE. VERIFY ALL PATTERNS WITH ARCHITECT.
5. ALIGN MIRROR ON CENTER OF LAVATORY U.N.O.
6. ONE HOOK INSIDE DOOR AT EACH TOILET PARTITION. ONE HOOK INSIDE DOOR AT SINGLE TOILET ROOMS AND ONE HOOK AT EACH SHOWER, MOUNTED AT 48" MAX AFF
7. REFER TO ELECTRICAL POWER PLAN FOR POWER CONNECTION

PBK

ARCHITECT PBK Architects, Inc.
PBK.com
SAN LUIS OBISPO
408 Higuera Street, Ste 100
San Luis Obispo, CA 93401
805-329-3076

FIRE STATION #44
COASTSIDE FIRE PROTECTION DISTRICT

501 STETSON STREET
MOSS BEACH, CA 94038
PLAN CHECK 02 RESPONSE

BID SET

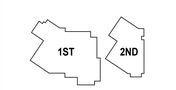

KEY PLAN
PLAN NORTH
TRUE NORTH

CLIENT
COASTSIDE FIRE PROTECTION DISTRICT
PROJECT NUMBER
230137
DATE 03/13/2026
DRAWN BY: KF/OS CHKED BY: AD
REVISIONS

#	DESCRIPTION	DATE

ACCESSIBILITY GUIDELINES

This document is for plan review only

G0.30

8/25/2026 5:05:35 PM

2022 CALIFORNIA GREEN BUILDING STANDARDS CODE
NONRESIDENTIAL MANDATORY MEASURES, SHEET 1 (July 2024 Supplement)

Y = YES
N/A = NOT APPLICABLE
RESPON. PARTY = RESPONSIBLE PARTY (ie: ARCHITECT, ENGINEER, OWNER, CONTRACTOR, INSPECTOR ETC.)

CHAPTER 3
GREEN BUILDING
SECTION 301 GENERAL

301.1 SCOPE. Buildings shall be designed to include the green building measures specified as mandatory in the application checklists contained in this code. Voluntary green building measures are also included in the application checklists and may be included in the design and construction of structures covered by this code, but are not required unless adopted by a city, county, or city and county as specified in Section 101.7.

301.3 NONRESIDENTIAL ADDITIONS AND ALTERATIONS. [BSC-CG] The provisions of individual sections of Chapter 5 apply to newly constructed buildings, building additions of 1,000 square feet or greater, and/or building alterations with a permit valuation of $200,000 or above (for occupancies within the authority of California Building Standards Commission). Code sections relevant to additions and alterations shall only apply to the portions of the building being added or altered within the scope of the permitted work.

A code section will be designated by a banner to indicate where the code section only applies to newly constructed buildings [N] or to additions and/or alterations [A]. When the code section applies to both, no banner will be used.

301.3.1 Nonresidential additions and alterations that cause updates to plumbing fixtures only:

Note: On and after January 1, 2014, certain commercial real property, as defined in Civil Code Section 1101.3, shall have its noncompliant plumbing fixtures replaced with appropriate water-conserving plumbing fixtures under specific circumstances. See Civil Code Section 1101.1 *et seq.* for definitions, types of commercial real property affected, effective dates, circumstances necessitating replacement of noncompliant plumbing fixtures, and duties and responsibilities for ensuring compliance.

301.3.2 Waste Diversion. The requirements of Section 5.408 shall be required for additions and alterations whenever a permit is required for work.

301.4 PUBLIC SCHOOLS AND COMMUNITY COLLEGES. (see GBSC)
301.5 HEALTH FACILITIES. (see GBSC)

SECTION 302 MIXED OCCUPANCY BUILDINGS

302.1 MIXED OCCUPANCY BUILDINGS. In mixed occupancy buildings, each portion of a building shall comply with the specific green building measures applicable to each specific occupancy.

SECTION 303 PHASED PROJECTS

303.1 PHASED PROJECTS. For shell buildings and others constructed for future tenant improvements, only those code measures relevant to the building components and systems considered to be new construction (or newly constructed) shall apply.

303.1.1 Initial Tenant improvements. The provisions of this code shall apply only to the initial tenant improvements to a project. Subsequent tenant improvements shall comply with the scoping provisions in Section 301.3 non-residential additions and alterations.

ABBREVIATION DEFINITIONS:

HCD	Department of Housing and Community Development
BSC	California Building Standards Commission
DSA-SS	Division of the State Architect, Structural Safety
OSHPD	Office of Statewide Health Planning and Development
LR	Low Rise
HR	High Rise
AA	Additions and Alterations
N	New

CHAPTER 5
NONRESIDENTIAL MANDATORY MEASURES

DIVISION 5.1 PLANNING AND DESIGN
SECTION 5.101 GENERAL
5.101.1 SCOPE
The provisions of this chapter outline planning, design and development methods that include environmentally responsible site selection, building design, building siting and development to protect, restore and enhance the environmental quality of the site and respect the integrity of adjacent properties.

SECTION 5.102 DEFINITIONS
5.102.1 DEFINITIONS
The following terms are defined in Chapter 2 *(and are included here for reference)*

CUTOFF LUMINAIRES. Luminaires whose light distribution is such that the candela per 1000 lamp lumens does not numerically exceed 25 (2.5 percent) at an angle of 90 degrees above nadir, and 100 (10 percent) at a vertical angle of 80 degrees above nadir. This applies to all lateral angles around the luminaire.

ELECTRIC VEHICLE (EV). [BSC-CG, HCD] An automotive-type vehicle for on-road use, such as passenger automobiles, buses, trucks, vans, neighborhood electric vehicles, electric motorcycles and the like, primarily powered by an electric motor that draws current from a rechargeable storage battery, fuel cell, photovoltaic array or other source of electric current. Plug-in hybrid electric vehicles (PHEV) are considered electric vehicles. For purposes of the California Electrical Code, off-road, self-propelled electric vehicles, such as industrial trucks, hoists, lifts, transports, golf carts, airline ground support equipment, tractors, boats and the like, are not included.

ELECTRIC VEHICLE (EV) CAPABLE SPACE. [BSC-CG, DSA-SS and HCD] A vehicle space with electrical panel space and load capacity to support a branch circuit and necessary raceways, both underground and/or surface mounted, to support EV charging.

ELECTRIC VEHICLE (EV) CHARGER. [BSC-CG, HCD] Off-board charging equipment used to charge an electric vehicle.

ELECTRIC VEHICLE CHARGING SPACE (EV SPACE). [HCD] A space intended for future installation of EV charging equipment and charging of electric vehicles.

ELECTRIC VEHICLE CHARGING STATION (EVCS). [BSC-CG, DSA-SS, HCD] One or more electric vehicle charging spaces served by EVSE or receptacle(s).

ELECTRIC VEHICLE (EV) READY SPACE. [HCD] A vehicle space which is provided with a branch circuit; any necessary raceways, both underground and/or surface mounted; to accommodate EV charging, terminating in a receptacle or a charger.

ELECTRIC VEHICLE SUPPLY EQUIPMENT (EVSE).[BSC-CG, DSA-SS and HCD] The conductors, including the ungrounded, grounded and equipment grounding conductors and the electric vehicle connectors, attachment plugs, personnel protection system, and all other fittings, devices, power outlets or apparatus installed specifically for the purpose of transferring energy between the premises wiring and the electric vehicle.

SECTION 5.105 DECONSTRUCTION AND REUSE OF EXISTING STRUCTURES
5.105.1 Scope. [BSC-CG] Effective July 1, 2024, alteration(s) to existing building(s) where the combined altered floor area is 100,000 square feet or greater shall comply with either Section 5.105.2, 5.409.2, or 5.409.3. Addition(s) to existing building(s) where the total floor area combined with the existing building(s) is 100,000 square feet or greater shall comply with either Section 5.105.2, Section 5.409.2, or Section 5.409.3. Effective January 1, 2026, the combined floor area shall be 50,000 square feet or greater.

[DSA-SS] Alteration(s) to existing building(s) where the combined altered floor area is 50,000 square feet or greater shall comply with either Section 5.105.2, 5.409.2, or 5.409.3. Addition(s) to existing building(s) where the total floor area combined with the existing building(s) is 50,000 square feet or greater shall comply with either Section 5.105.2, Section 5.409.2, or Section 5.409.3.

Exception [BSC-CG, DSA-SS]: Combined addition(s) to existing building(s) of two times the area or more of the existing building(s) is not eligible to meet compliance with Section 5.105.2.

☐ X **5.105.2 Reuse of existing building.** An alteration or addition to an existing building shall maintain at a minimum 45 percent combined of the existing building's primary structural elements (foundations; columns, beams, walls, and floors; and lateral elements) and existing building enclosure (roof framing, wall framing and exterior finishes). Window assemblies, insulation, portions of buildings deemed structurally unsound or hazardous, and hazardous materials that are remediated as part of the project shall not be included in the calculation.

5.105.2.1 Verification of compliance. Documentation shall be provided in the construction documents to demonstrate compliance with Section 5.105.2.

Note: Sample Worksheet WS-3 in Chapter 8 may be used to assist in documenting compliance with this section.

5.105.3 Deconstruction (Reserved).

Y	N/A	RESPON. PARTY
X	☐	C6

SECTION 5.106 SITE DEVELOPMENT
5.106.1 STORM WATER POLLUTION PREVENTION FOR PROJECTS THAT DISTURB LESS THAN ONE ACRE OF LAND. Newly constructed projects and additions which disturb less than one acre of land, and are not part of a larger common plan of development or sale, shall prevent the pollution of storm water runoff from the construction activities through one or more of the following measures:

5.106.1.1 Local ordinance. Comply with a lawfully enacted storm water management and/or erosion control ordinance.

5.106.1.2 Best Management Practices (BMPs). Prevent the loss of soil through wind or water erosion by implementing an effective combination of erosion and sediment control and good housekeeping BMPs.

1. Soil loss BMPs that should be considered for implementation as appropriate for each project include, but are not limited to, the following:
   a. Scheduling construction activity during dry weather, when possible.
   b. Preservation of natural features, vegetation, soil, and buffers around surface waters.
   c. Drainage swales or lined ditches to control stormwater flow.
   d. Mulching or hydroseeding to stabilize disturbed soils.
   e. Erosion control to protect slopes.
   f. Protection of storm drain inlets (gravel bags or catch basin inserts).
   g. Perimeter sediment control (perimeter silt fence, fiber rolls).
   h. Sediment trap or sediment basin to retain sediment on site.
   i. Stabilized construction exits.
   j. Wind erosion control.
   k. Other soil loss BMPs acceptable to the enforcing agency.
2. Good housekeeping BMPs to manage construction equipment, materials, non-stormwater discharges and wastes that should be considered for implementation as appropriate for each project include, but are not limited to, the following:
   a. Dewatering activities.
   b. Material handling and waste management.
   c. Building materials stockpile management.
   d. Management of washout areas (concrete, paints, stucco, etc.).
   e. Control of vehicle/equipment fueling to contractor's staging area.
   f. Vehicle and equipment cleaning performed off site.
   g. Spill prevention and control.
   h. Other housekeeping BMPs acceptable to the enforcing agency.

☐ X **5.106.2 STORMWATER POLLUTION PREVENTION FOR PROJECTS THAT DISTURB ONE OR MORE ACRES OF LAND.** Comply with all lawfully enacted stormwater discharge regulations for projects that (1) disturb one acre or more of land, or (2) disturb less than one acre of land but are part of a larger common plan of development sale.

Note: Projects that (1) disturb one acre or more of land, or (2) disturb less than one acre of land but are part of the larger common plan of development or sale must comply with the post-construction requirements detailed in the applicable National Pollutant Discharge Elimination System (NPDES) General permit for Stormwater Discharges Associated with Construction and Land Disturbance Activities issued by the State Water Resources Control Board or the Lahontan Regional Water Quality Control Board (for projects in the Lake Tahoe Hydrologic Unit).

The NPDES permits require postconstruction runoff (post-project hydrology) to match the preconstruction runoff (pre-project hydrology) with the installation of postconstruction stormwater management measures. The NPDES permits emphasize runoff reduction through on-site stormwater use, interception, evapotranspiration, and infiltration through nonstructural controls, such as Low Impact Development (LID) practices, and conversation design measures. Stormwater volume that cannot be addressed using nonstructural practices is required to be captured in structural practices and be approved by the enforcing agency.

Refer to the current applicable permits on the State Water Resources Control Board website at: www.waterboards.ca.gov/constructionstormwater. Consideration to the stormwater runoff management measures should be given during the initial design process for appropriate integration into site development.

5.106.4 BICYCLE PARKING. For buildings within the authority of California Building Standards Commission as specified in Section 103, comply with Section 5.106.4.1. For buildings within the authority of the Division of the State Architect pursuant to Section 105, comply with Section 5.106.4.2

X ☐ **5.106.4.1 Bicycle parking. [BSC-CG]** Comply with Sections 5.106.4.1.1 and 5.106.4.1.2; or meet the applicable local ordinance, whichever is stricter. A1.1, A1.2

5.106.4.1.1 Short-term bicycle parking. If the new project or an addition or alteration is anticipated to generate visitor traffic, provide permanently anchored bicycle racks within 200 feet of the visitors' entrance, readily visible to passers-by, for 5% of new visitor motorized vehicle parking spaces being added, with a minimum of one two-bike capacity rack.
Exception: Additions or alterations which add nine or less visitor vehicular parking spaces.

5.106.4.1.2 Long-term bicycle parking. For new buildings with tenant spaces that have 10 or more tenant-occupants, provide secure bicycle parking for 5 percent of the tenant-occupant vehicular parking spaces with a minimum of one bicycle parking facility.

5.106.4.1.3 For additions or alterations that add 10 or more tenant-occupant vehicular parking spaces, provide secure bicycle parking for 5 percent of the tenant vehicular parking spaces being added, with a minimum of one bicycle parking facility.

5.106.4.1.4 For new shell buildings in phased projects provide secure bicycle parking for 5 percent of the anticipated tenant-occupant vehicular parking spaces with a minimum of one bicycle parking facility.

5.106.4.1.5 Acceptable bicycle parking facility for Sections 5.106.4.1.2, 5.106.4.1.3, and 5.106.4.1.4 shall be convenient from the street and shall meet one of the following:

1. Covered, lockable enclosures with permanently anchored racks for bicycles;
2. Lockable bicycle rooms with permanently anchored racks; or
3. Lockable, permanently anchored bicycle lockers.

Note: Additional information on recommended bicycle accommodations may be obtained from Sacramento Area Bicycle Advocates.

☐ X **5.106.4.2 Bicycle parking. [DSA-SS]** For public schools and community colleges, comply with Sections 5.106.4.2.1 and 5.106.4.2.2

5.106.4.2.1 Student bicycle parking. Provide permanently anchored bicycle racks conveniently accessed with a minimum of four two-bike capacity racks per new building.
5.106.4.2.2 Staff bicycle parking. Provide permanent, secure bicycle parking conveniently accessed with a minimum of two staff bicycle parking spaces per new building. Acceptable bicycle parking facilities shall be convenient from the street or staff parking area and shall meet one of the following:

1. Covered, lockable enclosures with permanently anchored racks for bicycles;
2. Lockable bicycle rooms with permanently anchored racks; or
3. Lockable, permanently anchored bicycle lockers.

☐ X **5.106.5.3 Electric vehicle (EV) charging. [N] [BSC-CG]** Construction to provide electric vehicle infrastructure and facilitate electric vehicle charging shall comply with Section 5.106.5.3.1 EV capable spaces, Section 5.106.5.3.2 Electric vehicle charging stations and associated Table 5.106.5.3.1, or Section 5.106.5.3.6 Electric vehicle charging stations (EVCS)—Power allocation method and associated Table 5.106.5.3.6 and shall be provided in accordance with regulations in the *California Building Code* and the *California Electrical Code*.

Exceptions:
1. On a case-by-case basis where the local enforcing agency has determined compliance with this section is not feasible based upon one of the following conditions:
   a. Where there is no local utility power supply
   b. Where the local utility is unable to supply adequate power.
   c. Where there is evidence suitable to the local enforcement agency substantiating the additional local utility infrastructure design requirements, directly related to the implementation of Section 5.106.5.3, may adversely impact the construction cost of the project.
2. Parking spaces accessible only by automated mechanical car parking systems are not required to comply with this code section.

5.106.5.3.1 EV capable spaces. [N] EV capable spaces shall be provided in accordance with Table 5.106.5.3.1 and the following requirements:
1. Raceways complying with the California Electrical Code and no less that 1-inch (25 mm) diameter shall be provided and shall originate at a service panel or a subpanel(s) serving the area, and shall terminate in close proximity to the proposed location of the EV capable and into a suitable listed cabinet, box,enclosure or equivalent. A common raceway may be used to serve multiple EV charging spaces.
2. A service panel or subpanel (s) shall be provided with panel space and electrical load capacity for a dedicated 208/240 volt, 40-ampere minimum branch circuit for each EV capable space, with delivery of 30-ampere minimum to an installed EVSE at each EVCS.
3. The electrical system and any on-site distribution transformers shall have sufficient capacity to supply full rated amperage at each EV capable space.
4. The service panel or subpanel circuit directory shall identify the reserved overcurrent protective devices space(s) as "EV CAPABLE". The raceway termination location shall be permanently and visibly marked as "EV CAPABLE."

Note: A parking space served by electric vehicle supply equipment or designed as a future EV charging space shall count as at least one standard automobile parking space only for the purpose of complying with any applicable minimum parking space requirements established by an enforcement agency. See vehicle Code Section 22511.2 for further details.

Y	N/A	RESPON. PARTY
☐	X	

TABLE 5.106.5.3.1

TOTAL NUMBER OF ACTUAL PARKING SPACES	NUMBER OF REQUIRED EV CAPABLE SPACES	NUMBER OF EVCS (EV CAPABLE SPACES PROVIDED WITH EVSE)[1,2]
0-9	0	0
10-25	2	0
26-50	8	2
51-75	13	3
76-100	17	4
101-150	25	6
151-200	35	9
201 AND OVER	20 percent of actual parking spaces[1]	25 percent of EV capable spaces[1]

1. Calculation for spaces shall be rounded up to the nearest whole number.
2. The number of required EVCS (EV capable spaces provided with EVSE) in column 3 count toward the total number of required EV capable spaces shown in column 2.
3. At least one Level 2 EVSE shall be provided.

5.106.5.3.2 Electric vehicle charging stations (EVCS) EV capable spaces shall be provided with electric vehicle supply equipment (EVSE) to create EVCS in the number indicated in Table 5.106.5.3.1. The EVCS required by Table 5.106.5.3.1 shall be provided with Level 2 EVSE or DCFC as permitted in Section 5.106.5.3.2.1. At least one Level 2 EVSE shall be provided.

One EV charger with multiple connectors capable of charging multiple EVs simultaneously shall be permitted if the electrical load capacity required by Section 5.106.5.3.1 for each EV capable space is accumulatively supplied to the EV charger.

The installation of each DCFC EVSE shall be permitted to reduce the minimum number of required EV capable spaces without EVSE by five and reduce proportionally the required electrical load capacity to the service panel or subpanel.

5.106.5.3.2.1 The installation of each DCFC EVSE shall be permitted to reduce the minimum number of required EV capable spaces without EVSE or EVCS with Level 2 EVSE by five and reduce proportionally the required electrical load capacity to the service panel or subpanel.

5.106.5.3.2.2 The installation of two low power Level 2 EV charging receptacles shall be permitted to reduce the minimum number of required EV capable spaces without EVSE in Table 5.106.5.3.1 by one.

5.106.5.3.3 Use of automatic load management systems (ALMS).
ALMS shall be permitted for EVCS. When ALMS is installed, the required electrical load capacity specified in Section 5.106.5.3.1 for each EVCS may be reduced when serviced by an EVSE controlled by an ALMS. Each EVSE controlled by an ALMS shall deliver a minimum 30 amperes to an EV when charging one vehicle and shall deliver a minimum 3.3 kW while simultaneously charging multiple EVs.

5.106.5.3.4 Accessible EVCS.
When EVSE is installed, accessible EVSC shall be provided in accordance with the *California Building Code*, Chapter 11B, Section 11B-228.3.

Note: For EVCS signs, refer to Caltrans Traffic Operations Policy Directive 13-01 (Zero Emission Vehicle Signs and Pavement Markings) or its successor(s).

5.106.5.3.4 Accessible electric vehicle charging station (EVCS). When EVSE is installed, accessible EVCS shall be provided in accordance with the *California Building Code*, Chapter 11B, Section 11B-228.3.

5.106.5.3.5 Electric vehicle charging station signage. Electric vehicle charging stations shall be identified by signage or pavement markings in compliance with Caltrans Traffic Operations Policy Directive 13-01 (Zero Emission Vehicle Signs and Pavement Markings) or its successor(s).

Power allocation method shall include the following:
1. Use any kVA combination of EV capable spaces, low power Level 2, Level 2 or DCFC EVSEs.
2. At least one Level 2 EVSE shall be provided.

5.106.5.3.6 Electric vehicle charging stations (EVCS)—power allocation method. The power allocation method may be used as an alternative to the requirements in Section 5.106.5.3.1, Section 5.106.5.3.2 and associated Table 5.106.5.3.1. Use Table 5.106.5.3.6 to determine the total power in kVA required based on the total number of actual parking spaces.

TABLE 5.106.5.3.6

TOTAL NUMBER OF ACTUAL PARKING SPACES	MINIMUM TOTAL kVA @ 6.6 kVA	TOTAL kVA REQUIRED IN ANY COMBINATION OF EV CAPABLE,3,4 LOW POWER LEVEL 2, LEVEL 2, 1, 2 OR DCFC
0-9	0	0
10-25	26.4	26.4
26-50	52.8	52.8
51-75	85.8	85.8
76-100	112.2	112.2
101-150	165	165
151-200	231	231
201 AND OVER	20 percent of actual parking spaces x 6.6	Total required kVA = P × .20 × 6.6 Where P = Parking spaces in facility

1. Level 2 EVSE @ 6.6 kVA minimum.
2. At least one Level 2 EVSE shall be provided.
3. Maximum allowed kVA to be utilized for EV capable spaces is 75 percent.
4. If EV capable spaces are utilized, they shall meet the requirements of Section 5.106.5.3.1 EV capable spaces.

☐ X **5.106.5.4 Additions or alterations to existing buildings or parking facilities [A]. [BSC-CG]** Existing buildings or parking facilities being modified by one of the following shall comply with Section 5.106.5.4.1 or 5.106.5.4.2. When EVSE is installed, accessible EVCS shall be provided in accordance with the *California Building Code*, Chapter 11B, Section 11B-228.3.

1. When the scope of construction work includes an increase in power supply to an electric service panel as part of a parking facility addition or alteration.
2. When a new photovoltaic system is installed covering existing parking spaces.
3. When additions or alterations to existing buildings are triggered pursuant to code Section 301.3 and the scope of work includes an increase in power supply to an electric service panel.

Exceptions:
1. On a case-by-case basis where the local enforcing agency has determined compliance with this section is not feasible based upon one of the following conditions:
   a. Where there is no local utility power supply.
   b. Where the local utility is unable to supply adequate power.
   c. Where there is evidence suitable to the local enforcement agency substantiating that additional local utility infrastructure design requirements, directly related to the implementation of Section 5.106.5.3, may adversely impact the construction cost of the project.
   d. Where demonstrated as impracticable excluding local utility service or utility infrastructure issues.
2. Remote parking facilities that do not have access to the building service panel.
3. Parking area lighting upgrades where no trenching is part of the scope of work.
4. Emergency repairs, including but not limited to water line break in parking facilities, natural disaster repairs, etc.

5.106.5.4.1 Existing buildings or parking areas without previously installed EV capable infrastructure [A]. When EV capable infrastructure does not exist at an existing parking facility or building, and the parking facility or building undergoes an addition or alteration listed in Section 5.106.5.4, construction shall include electric vehicle charging in compliance with either Section 5.106.5.3 and associated Table 5.106.5.3.1, or Section 5.106.5.3.6 and associated Table 5.106.5.3.6 for the total number of actual parking spaces being added or altered.

5.106.5.4.2 Existing buildings or parking areas with previously installed EV capable infrastructure [A]. When EV capable infrastructure is available at an existing parking facility or building, and the parking facility or building is undergoing an addition or alteration listed in Section 5.106.5.4, construction shall include electric vehicle charging in compliance with either Section 5.106.5.3 and associated Table 5.106.5.3.1, or Section 5.106.5.3.6 and associated Table 5.106.5.3.6 utilizing the existing EV capable allocated power and infrastructure for the total number of actual parking spaces being added or altered. If the area being added or altered exceeds the existing EV capable capacity, allocated power and infrastructure, provide additional EV charging as needed to comply with this section.

Y	N/A	RESPON. PARTY
☐	X	

5.106.5.5 Electric vehicle (EV) charging: medium-duty and heavy-duty. [N] [BSG-CG] Construction shall comply with Section 5.106.5.5.1 to facilitate future installation of electric vehicle supply equipment (EVSE). Construction for warehouses, grocery stores and retail stores, office buildings, and manufacturing facilities with planned off-street loading spaces shall also comply with Section 5.106.5.5.1 for future installation of medium- and heavy-duty EVSE.

Exceptions:
1. On a case-by-case basis where the local enforcing agency has determined compliance with this section is not feasible based upon one of the following conditions:
   a. Where there is no local utility power supply.
   b. Where the local utility is unable to supply adequate power.
   c. Where there is evidence suitable to the local enforcing agency substantiating that additional local utility infrastructure design requirements, directly related to the implementation of Section 5.106.5.3, may adversely impact the construction cost of the project.

When EVSE(s) is/are installed, it shall be in accordance with the *California Building Code*, the *California Electrical Code* and as follows:

5.106.5.5.1 Electric vehicle charging readiness requirements for warehouses, grocery stores, office buildings, and manufacturing facilities and retail stores with planned off-street loading spaces. [N]

In order to avoid future demolition when adding EV supply and distribution equipment, spare raceway(s) or busway(s) and adequate capacity for transformer(s), service panel(s) or subpanel(s) shall be installed at the time of construction in accordance with the *California Electrical Code*. Construction plans and specifications shall include, but are not limited to, the following:

1. The transformer, main service equipment and subpanels shall meet the minimum power requirement in Table 5.106.5.5.1 to accommodate the dedicated branch circuits for the future installation of EVSE.

2. The construction documents shall indicate one or more location(s) convenient to the planned off-street loading space(s) reserved for medium- and heavy-duty ZEV charging cabinets and charging dispensers, and a pathway reserved for routing of conduit from the termination of the raceway(s) or busway(s) to the charging cabinet(s) and dispenser(s), as shown in Table 5.106.5.5.1.

3. Raceway(s) or busway(s) originating at a main service panel or a subpanel(s) serving the area where potential future medium- and heavy-duty EVSE will be located and shall terminate in close proximity to the potential future location of the charging equipment for medium- and heavy-duty vehicles.

4. The raceway(s) or busway(s) shall be of sufficient size to carry the minimum additional system load to the future location of the charging for medium- and heavy-duty ZEVs as shown in Table 5.106.5.5.1.

TABLE 5.106.5.5.1 RACEWAY CONDUIT AND PANEL POWER REQUIREMENTS FOR MEDIUM- AND HEAVY-DUTY EVSE [N]

BUILDING TYPE	BUILDING SIZE (SQ. FT.)	NUMBER OF OFF-STREET LOADING SPACES	ADDITIONAL CAPACITY REQUIRED (KVA) FOR RACEWAY & BUSWAY AND TRANSFORMER & PANEL
Grocery	10,000 to 90,000	1 or 2	200
		3 or Greater	400
	Greater than 90,000	1 or Greater	400
Manufacturing Facilities	10,000 to 50,000	1 or 2	200
	10,000 to 50,000	3 or Greater	400
	Greater than 50,000	1 or Greater	400
Office Buildings	10,000 to 135,000	1 or 2	200
	10,000 to 135,000	3 or Greater	400
	Greater than 135,000	1 or Greater	400
Retail	10,000 to 135,000	1 or 2	200
		3 or Greater	400
	Greater than 135,000	1 or Greater	400
Warehouse	20,000 to 256,000	1 or 2	200
		3 or Greater	400
	Greater than 256,000	1 or Greater	400

☐ X **5.106.5.6 Electric vehicle (EV) charging at public schools and community colleges. [DSA-SS]** Electric vehicle infrastructure and electric vehicle charging stations shall comply with Section 5.106.5.6 and shall be provided in accordance with regulations in the California Building Code and the California Electrical Code.

Exceptions:
1. On a case-by-case basis where compliance with this section has been demonstrated to be not feasible based upon one of the following conditions,and with concurrence by the Division of the State Architect (DSA), compliance with Section 5.106.5.6 shall not be required.
   a. Where there is no local utility power supply.
   b. Where the local utility is unable to supply adequate power.
   c. The installation of EVCS is impracticable.
2. Parking spaces accessible only by automated mechanical car parking systems are not required to comply with Section 5.106.5.6.

5.106.5.6.1 EV capable spaces. EV capable spaces shall be provided in accordance with Table 5.106.5.6.1 and the following requirements:

1. Raceways complying with the California Electrical Code and no less than 1-inch (25 mm) diameter shall be provided and shall originate at a service panel or a subpanel(s) serving the area and shall terminate in close proximity to the proposed location of the EV capable space and into a suitable listed cabinet, box, enclosure or equivalent. A common raceway may be used to serve multiple EV capable spaces.

2. A service panel or subpanel(s) shall be provided with panel space and electrical load capacity for a dedicated 208/240 volt, 40-ampere minimum branch circuit for each EV capable space, with delivery of 30-ampere minimum to an installed EVSE at each EVCS.

3. The electrical system and any on-site distribution transformers shall have sufficient capacity to supply full rated amperage at each EV capable space.

4. The service panel or subpanel circuit directory shall identify the reserved overcurrent protective device space(s) as "EV CAPABLE." The raceway termination location shall be permanently and visibly marked as "EV CAPABLE."

TABLE 5.106.5.6.1

TOTAL NUMBER OF ACTUAL PARKING SPACES	NUMBER OF REQUIRED EV CAPABLE SPACES	NUMBER OF REQUIRED EVCS[2]
0-9	0	0
10-25	4	1
26-50	8	2
51-75	13	3
76-100	17	4
101-150	25	6
151-200	35	9
201 AND OVER	20 percent of total spaces[1]	25 percent of EV capable spaces[1]

1. Calculation for spaces shall be rounded up to the nearest whole number.
2. Each EVCS shall reduce the number of required EV capable spaces by the same number.

5.106.5.6.2 Electric vehicle charging stations (EVCS). EV capable spaces shall be provided with EVSE to create EVCS in the number indicated in Table 5.106.5.6.1 and shall comply with Section 5.106.5.6.2. EVCS shall be serviced by Level 2 or Direct Current Fast Charging (DCFC) EVSE, or with EVSE in any combination of Level 2 and DCFC. Accessible EVCS shall be provided in accordance with *California Building Code* Chapter 11B.

DISCLAIMER: *THIS DOCUMENT IS PROVIDED AND INTENDED TO BE USED AS A MEANS TO INDICATE AREAS OF COMPLIANCE WITH THE CALIFORNIA GREEN BUILDING STANDARDS (CALGREEN) CODE. DUE TO THE VARIABLES BETWEEN BUILDING DEPARTMENT JURISDICTIONS, THIS CHECKLIST IS TO BE USED ON AN INDIVIDUAL PROJECT BASIS AND MAY BE MODIFIED BY THE END USER TO MEET THOSE INDIVIDUAL NEEDS. THE END USER ASSUMES ALL RESPONSIBILITY ASSOCIATED WITH THE USE OF THIS DOCUMENT, INCLUDING VERIFICATION WITH THE FULL CODE.*

PBK
ARCHITECT PBK Architects, Inc.
PBK.com
SAN LUIS OBISPO
408 Higuera Street, Ste 100
San Luis Obispo, CA 93401
805-329-3076

FIRE STATION #44
COASTSIDE FIRE PROTECTION DISTRICT
501 STETSON STREET
MOSS BEACH, CA 94038
PLAN CHECK 02 RESPONSE

BID SET

1ST 2ND
KEY PLAN
PLAN NORTH TRUE NORTH

CLIENT
COASTSIDE FIRE PROTECTION DISTRICT
PROJECT NUMBER
230137
DATE 03/13/2026
DRAWN BY: KF/OS CHKED BY: AD
REVISIONS

#	DESCRIPTION	DATE

This document is for plan review only

CHECKLISTS COMPLIANCE CALGREEN

G0.32

2022 CALIFORNIA GREEN BUILDING STANDARDS CODE
NONRESIDENTIAL MANDATORY MEASURES, SHEET 2 (July 2024 Supplement)

Y = YES
N/A = NOT APPLICABLE
RESPON. PARTY = RESPONSIBLE PARTY (ie: ARCHITECT, ENGINEER, OWNER, CONTRACTOR, INSPECTOR ETC.)

5.106.5.6.2.1 Reduced number of EV capable spaces. The installation of each DCFC EVSE shall be permitted to reduce the minimum number of required EV capable spaces indicated in Table 5.106.5.6.1 by five and reduce proportionally the required electrical load capacity to the service panel or subpanel.

5.106.5.6.2.2 Multiple connectors. EVSE with multiple vehicle connectors capable of charging multiple EVs simultaneously shall be permitted if the electrical load capacity required by Section 5.106.5.6.1 for each EV capable space is accumulatively supplied to the EVSE.

5.106.5.6.2.3 Use of automatic load management systems (ALMS). ALMS shall be permitted for EVCS installed in accordance with Section 5.105.5.6.2. When ALMS is installed, the required electrical load capacity specified in Section 5.106.5.6.1 for each EVCS may be reduced when serviced by an EVSE controlled by an ALMS. Each EVSE controlled by an ALMS shall deliver a minimum 30 amperes to an EV when charging one vehicle and shall deliver a minimum 3.3 kW while simultaneously charging multiple EVs.

5.106.5.6.3 EVCS alternative compliance. In lieu of compliance with Section 5.106.5.6.2, EVCS shall be provided with Level 1, low power Level 2, or Level 2, or any combination of Level 1, low power Level 2 or Level 2 EVSE such that the total power supplied by the combination of EVSE meets the minimum power indicated in Table 5.106.5.6.3, based on the total number of actual parking spaces in each parking facility.

TABLE 5.106.5.6.3

NUMBER OF PARKING SPACES IN A PARKING FACILITY	MINIMUM TOTAL POWER (KVA) REQUIRED FOR EVCS
0-9	0
10-25	7
26-50	14
51-75	20
76-100	27
101-150	40
151-200	60
201 AND OVER	Total required KVA = P × .05 × 6.6 Where P = Parking spaces in facility

5.106.5.6.4 EVCS for alterations of or additions to parking facilities. Alterations of or additions to parking facilities shall provide EVCS in compliance with Section 5.106.5.6.4. The installation of infrastructure for EV capable spaces required to be provided without EVSE shall not be required.

5.106.5.6.4.1 Alterations of and additions to parking facilities. EVCS shall be provided in accordance with the number indicated in Table 5.106.5.6.1 or minimum power indicated in Table 5.106.5.6.3 when the scope of work includes an increase in power supply to an electric panel serving light fixtures illuminating the parking area or when area containing parking spaces is added to a parking facility. The number of required EVCS shall be based on the total number of existing and new parking spaces in the parking facility.

5.106.5.6.4.2 Alterations consisting of the installation of photovoltaic systems. EVCS shall be provided in accordance with the number indicated in Table 5.106.5.6.1 or maximum power indicated in Table 5.106.5.6.3 when a new photovoltaic system is installed in an existing parking facility.

5.106.5.6.5 Requirement to install EVSE. Level 2 EVSE shall be provided in all existing EV capable spaces to create EVCS when a project is required by California Administrative Code Section 4-309 to be submitted for plan approval to the Division of the State Architect. When EVSE is installed in existing EV capable spaces, accessible EVCS shall be provided in accordance with *California Building Code* Chapter 11B.

Exception: Projects in which improvements in parking areas consist only of accessibility improvements are not required to comply with Section 5.106.5.6.5.

X ☐ C6, E0.3, E1.1, **5.106.8 LIGHT POLLUTION REDUCTION. [N].** I Outdoor lighting systems shall be designed and installed to comply with the following:

1. The minimum requirements in the California Energy Code for Lighting Zones 0-4 as defined in Chapter 10, Section 10-114 of the California Administrative Code; and
2. Backlight (B) ratings as defined in IES TM-15-11 (shown in Table A-1 in Chapter 8);
3. Uplight and Glare ratings as defined in California Energy Code (shown in Tables 130.2-A and 130.2-B in Chapter 8) and
4. Allowable BUG ratings not exceeding those shown in Table 5.106.8, [N] or Comply with a local ordinance lawfully enacted pursuant to Section 101.7, whichever is more stringent.

Exceptions: [N]

1. Luminaires that qualify as exceptions in Sections 130.2 (b) and 140.7 of the California Energy Code.
2. Emergency lighting.
3. Building facade meeting the requirements in Table 140.7-B of the California Energy Code, Part 6.
4. Custom lighting features as allowed by the local enforcing agency, as permitted by Section 101.8 Alternate materials, designs and methods of construction.
5. Luminaires with less than 6,200 initial luminaire lumens.

TABLE 5.106.8 [N] MAXIMUM ALLOWABLE BACKLIGHT, UPLIGHT AND GLARE (BUG) RATINGS 1,2

ALLOWABLE RATING	LIGHTING ZONE LZ0	LIGHTING ZONE LZ1	LIGHTING ZONE LZ2	LIGHTING ZONE LZ3	LIGHTING ZONE LZ4
MAXIMUM ALLOWABLE BACKLIGHT RATING 3					
Luminaire greater than 2 mounting heights (MH) from property line	N/A	No Limit	No Limit	No Limit	No Limit
Luminaire back hemisphere is 1-2 MH from property line	N/A	B2	B3	B4	B4
Luminaire back hemisphere is 0.5-1 MH from property line	N/A	B1	B2	B3	B3
Luminaire back hemisphere is less than 0.5 MH from property line	N/A	B0	B0	B1	B2
MAXIMUM ALLOWABLE UPLIGHT RATING (U)					
For area lighting 3	N/A	U0	U0	U0	U0
For all other outdoor lighting,including decorative luminaires	N/A	U1	U2	U3	UR
MAXIMUM ALLOWABLE GLARE RATING 3 (G)					
MAXIMUM ALLOWABLE GLARE RATING 3 (G)	N/A	G1	G2	G3	G4
MAXIMUM ALLOWABLE GLARE RATING 3 (G)	N/A	G0	G1	G1	G2
MAXIMUM ALLOWABLE GLARE RATING 3 (G)	N/A	G0	G0	G1	G1
MAXIMUM ALLOWABLE GLARE RATING 3 (G)	N/A	G0	G0	G0	G1

1. IESNA Lighting Zones 0 and 5 are not applicable; refer to Lighting Zones as defined in the *California Energy Code* and Chapter 10 of the *California Administrative Code*.

2. For property lines that abut public walkways, bikeways, plazas and parking lots, the property line may be considered to be 5 feet beyond the actual property line for purpose of determining compliance with this section. For property lines that abut public roadways and public transit corridors, the property line may be considered to be the centerline of the public roadway or public transit corridor for the purpose of determining compliance with this section.

3. General lighting luminaires in areas such as outdoor parking, sales or storage lots shall meet these reduced ratings. Decorative luminaries located in these areas shall meet *U*-value limits for "all other outdoor lighting"

☐ ☒ E1.1, **5.106.8.1 Facing- Backlight**
Luminaries within 2MH of a property line shall be oriented so that the nearest property line is behind the fixture, and shall comply with the backlight rating specified in Table 5.106.8 based on the lighting zone and distance to the nearest point of that property line.

Exception: Corners. If two property lines (or two segments of the same property line) have equidistant point to the luminaire, then the luminaire may be oriented so that the intersection of the two lines (the corner) is directly behind the luminaire. The luminaire shall still use the distance to the nearest points(s) on the property lines to determine the required backlight rating.

5.106.8.2 Facing-Glare.
For luminaires covered by 5.106.8.1, if a property line also exists within or extends into the front hemisphere within 2MH of the luminaire then the luminaire shall comply with the more stringent glare rating specified in Table 5.106.8 based on the lighting zone and distance to the nearest point on the nearest property line within the front hemisphere.

Note: [N]
1.See also *California Building Code*, Chapter 12, Section 1205.6 for college campus lighting requirements for parking facilities and walkways.
2.Refer to Chapter 8 (Compliance Forms, Worksheets and Reference Material) for IES TM-15-11 Table A-1, *California Energy Code* Tables 130.2-A and 130.2-B.
3. Refer to the *California Building Code* for requirements for additions and alterations.

5.106.10 GRADING AND PAVING. Construction plans shall indicate how site grading or a drainage system will manage all surface water flows to keep water from entering buildings. Examples of methods to manage surface water include, but are not limited to, the following:

1. Swales.
2. Water collection and disposal systems.
3. French drains.
4. Water retention gardens.
5. Other water measures which keep surface water away from buildings and aid in groundwater recharge.
   Exception: Additions and alterations not altering the drainage path.

☐ X **5.106.12 SHADE TREES [DSA-SS].** Shade Trees shall be planted to comply with Sections 5.106.12.1, 5.106.12.2, and 5.106.12.3. Percentages shown shall be measured at noon on the summer solstice. Landscape irrigation necessary to establish and maintain tree health shall comply with Section 5.304.6.

5.106.12.1 Surface parking areas. Shade tree plantings, minimum #10 container size or equal, shall be installed to provide shade over 50 percent of the parking area within 15 years.

Exceptions: Surface parking area covered by solar photovoltaic shade structures with roofing materials that comply with Table A5.106.11.2.2 in Appendix A5 shall be permitted in whole or in part in lieu of shade tree planting.

5.106.12.2 Landscape areas. Shade tress plantings, minimum #10 container size or equal shall be installed to provide shade of 20% of the landscape area within 15 years.

Exceptions: Playfields for organized sport activity are not included in the total area calculation.

5.106.12.3. Hardscape areas. Shade tree plantings, minimum #10 container size or equal shall be installed to provide shade over 20 percent of the hardscape area within 15 years.

Exceptions:
1. Walks, hardscape areas covered by solar photovoltaic shade structures or shade structures with roofing materials that comply with Table A5.106.11.2.2 in Appendix A5 shall be permitted in whole or in part in lieu of shade tree planting.
2. Designated and marked play areas of organized sport activity are not included in the total area calculation.

DIVISION 5.2 ENERGY EFFICIENCY

SECTION 5.201 GENERAL
5.201.1 Scope [BSC-CG]. *California Energy Code [DSA-SS].* For the purposes of mandatory energy efficiency standards in this code, the California Energy Commission will continue to adopt mandatory building standards.

DIVISION 5.3 WATER EFFICIENCY AND CONSERVATION

SECTION 5.301 GENERAL
5.301.1 Scope. The provisions of this chapter shall establish the means of conserving water use indoors, outdoors and in wastewater conveyance.

SECTION 5.302 DEFINITIONS
5.302.1 Definitions. The following terms are defined in Chapter 2 *(and are included here for reference)*

EVAPOTRANSPIRATION ADJUSTMENT FACTOR (ETAF) [DSA-SS]. An adjustment factor when applied to reference evapotranspiration that adjusts for plant factors and irrigation efficiency, which ae two major influences on the amount of water that needs to be applied to the landscape.

FOOTPRINT AREA [DSA-SS]. The total area of the furthest exterior wall of the structure projected to natural grade, not including exterior areas such as stairs, covered walkways, patios and decks.

METERING FAUCET. A self-closing faucet that dispenses a specific volume of water for each actuation cycle. The volume or cycle duration can be fixed or adjustable.

GRAYWATER. Pursuant to Health and Safety Code Section 17922.12, "graywater" means untreated wastewater that has not been contaminated by any toilet discharge, has not been affected by infectious, contaminated, or unhealthy bodily wastes, and does not present a threat from contamination by unhealthful processing, manufacturing, or operating wastes. "Graywater" includes, but is not limited to wastewater from bathtubs, showers, bathroom washbasins, clothes washing machines and laundry tubs, but does not include waste water from kitchen sinks or dishwashers.

MODEL WATER EFFICIENT LANDSCAPE ORDINANCE (MWELO). The California ordinance regulating landscape design, installation and maintenance practices that will ensure commercial, multifamily and other developer installed landscapes greater than 2500 square feet meet an irrigation water budget developed based on landscaped area and climatological parameters.

MODEL WATER EFFICIENT LANDSCAPE ORDINANCE (MWELO). [HCD] The California model ordinance (California Code of Regulations, Title 23, Division 2, Chapter 2.7), regulating landscape design, installation and maintenance practices. Local agencies are required to adopt the updated MWELO, or adopt a local ordinance at least as effective as the MWELO.

POTABLE WATER. Water that is drinkable and meets the U.S. Environmental Protection Agency (EPA) Drinking Water Standards. See definition in the California Plumbing Code, Part 5.

POTABLE WATER. [HCD] Water that is satisfactory for drinking, culinary, and domestic purposes, and meets the U.S. Environmental Protection Agency (EPA) Drinking Water Standards and the requirements of the Health Authority Having Jurisdiction.

RECYCLED WATER. Water which, as a result of treatment of waste, is suitable for a direct beneficial use or a controlled use that would not otherwise occur [Water Code Section 13050 (n)]. Simply put, recycled water is water treated to remove waste matter attaining a quality that is suitable to use the water again.

SUBMETER. [HCD 1] A secondary device beyond a meter that measures water consumption of an individual rental unit within a multiunit residential structure or mixed-use residential and commercial structure. (See Civic Code Section 1954.202 (g) and Water code Section 517 for additional details.)

WATER BUDGET. Is the estimated total landscape irrigation water use which shall not exceed the maximum applied water allowance calculated in accordance with the Department of Water Resources Model Efficient Landscape Ordinance (MWELO).

SECTION 5.303 INDOOR WATER USE
☐ ☒ **5.303.1 METERS.** Separate submeters or metering devices shall be installed for the uses described in Sections 503.1.1 and 503.1.2.

5.303.1.1 Buildings in excess of 50,000 square feet. Separate submeters shall be installed as follows:

1. For each individual leased, rented or other tenant space within the building projected to consume more than 100 gal/day (380 L/day), including, but not limited to, spaces used for laundry or cleaners, restaurant or food service, medical or dental office, laboratory, or beauty salon or barber shop.

2. Where separate submeters for individual building tenants are unfeasible, for water supplied to the following subsystems:
   a. Makeup water for cooling towers where flow through is greater than 500 gpm (30 L/s).
   b. Makeup water for evaporative coolers greater than 6 gpm (0.04 L/s).
   c. Steam and hot water boilers with energy input more than 500,000 Btu/h (147 kW).

5.303.1.2 Excess consumption. A separate submeter or metering device shall be provided for any tenant within a new building or within an addition that is projected to consume more than 1,000 gal/day.

☐ ☒ **5.303.3 WATER CONSERVING PLUMBING FIXTURES AND FITTINGS.** Plumbing fixtures (water closets and urinals) and fittings (faucets and showerheads) shall comply with the following:

5.303.3.1 Water Closets. The effective flush volume of all water closets shall not exceed 1.28 gallons per flush. Tank-type water closets shall be certified to the performance criteria of the U.S. EPA WaterSense Specification for Tank-Type toilets.

Note: The effective flush volume of dual flush toilets is defined as the composite, average flush volume of two reduced flushes and one full flush.

5.303.3.2 Urinals.
5.303.3.2.1 Wall-mounted Urinals. The effective flush volume of wall-mounted urinals shall not exceed 0.125 gallons per flush.

5.303.3.2.2 Floor-mounted Urinals. The effective flush volume of floor-mounted or other urinals shall not exceed 0.5 gallons per flush.

5.303.3.3 Showerheads. [BSC-CG]
5.303.3.3.1 Single showerhead. Showerheads shall have a maximum flow rate of not more than 1.8 gallons per minute at 80 psi. Showerheads shall be certified to the performance criteria of the U.S. EPA WaterSense Specification for Showerheads.

5.303.3.3.2 Multiple showerheads serving one shower. When a shower is served by more than one showerhead, the combined flow rate of all the showerheads and/or other shower outlets controlled by a single valve shall not exceed 1.8 gallons per minute at 80 psi, or the shower shall be designed to allow only one shower outlet to be in operation at a time.
Note: A hand-held shower shall be considered a showerhead.

5.303.3.3 Showerheads. [BSC-CG]
5.303.3.3.1 Single showerhead. Showerheads shall have a maximum flow rate of not more than 1.8 gallons per minute at 80 psi. Showerheads shall be certified to the performance criteria of the U.S. EPA WaterSense Specification for Showerheads.

5.303.3.3.2 Multiple showerheads serving one shower. When a shower is served by more than one showerhead, the combined flow rate of all the showerheads and/or other shower outlets controlled by a single valve shall not exceed 1.8 gallons per minute at 80 psi, or the shower shall be designed to allow only one shower outlet to be in operation at a time.
Note: A hand-held shower shall be considered a showerhead.

5.303.3.4 Faucets and fountains.
5.303.3.4.1 Nonresidential Lavatory faucets. Lavatory faucets shall have a maximum flow rate of not more than 0.5 gallons per minute at 60 psi.

5.303.3.4.2 Kitchen faucets. Kitchen faucets shall have a maximum flow rate of not more than 1.8 gallons per minute at 60 psi. Kitchen faucets may temporarily increase the flow above the maximum rate, but not to exceed 2.2 gallons per minute at 60 psi, and must default to a maximum flow rate of 1.8 gallons per minute at 60 psi.

5.303.3.4.3 Wash fountains. Wash fountains shall have a maximum flow rate of not more than1.8 gallons per minute/20 [rim space (inches) at 60 psi].

5.303.3.4.4 Metering faucets. Metering faucets shall not deliver more than 0.20 gallons per cycle.

5.303.3.4.5 Metering faucets for wash fountains. Metering faucets for wash fountains shall have a maximum flow rate of not more than 0.20 gallons per minute/20 [rim space (inches) at 60 psi].

Note: Where complying faucets are unavailable, aerators or other means may be used to achieve reduction.

5.303.3.4.6 Pre-rinse spray value
When installed, shall meet the requirements in the *California Code of Regulations*, Title 20 (Appliance Efficiency Regulations), Section 1605.1 (h)(4) Table H-2, Section 1605.3 (h)(4)(A), and Section 1607 (d)(7), and shall be equipped with an integral automatic shutoff.

FOR REFERENCE ONLY: The following table and code section have been reprinted from the *California Code of Regulations*, Title 20 (Appliance Efficiency Regulations), Section 1605.1 (h)(4) and Section 1605.3 (h)(4)(A).

TABLE H-2

STANDARDS FOR COMMERCIAL PRE-RINSE SPRAY VALUES MANUFACTURED ON OR AFTER JANUARY 28, 2019

PRODUCT CLASS [spray force in ounce force (ozf)]	MAXIMUM FLOW RATE (gpm)
Product Class 1 (≤ 5.0 ozf)	1.00
Product Class 2 (> 5.0 ozf and ≤ 8.0 ozf)	1.20
Product Class 3 (> 8.0 ozf)	1.28

☐ ☒ **5.303.4 COMMERCIAL KITCHEN EQUIPMENT.**

5.303.4.1 Food Waste Disposers. Disposers shall either modulate the use of water to no more than 1 gpm when the disposer is not in use (not actively grinding food waste/no-load) or shall automatically shut off after no more than 10 minutes of inactivity. Disposers shall use no more than 8 gpm of water.
Note: This code section does not affect local jurisdiction authority to prohibit or require disposer installation.

5.303.5 AREAS OF ADDITION OR ALTERATION. For those occupancies within the authority of the California Building Standards Commission as specified in Section 103, the provisions of Section 5.303.3 and 5.303.4 shall apply to new fixtures in additions or areas of alteration to the building.

5.303.6 STANDARDS FOR PLUMBING FIXTURES AND FITTINGS. Plumbing fixtures and fittings shall be installed in accordance with the *California Plumbing Code*, and shall meet the applicable standards referenced in Table 1701.1 of the *California Plumbing Code* and in Chapter 6 of this code.

SECTION 5.304 OUTDOOR WATER USE
5.304.1 OUTDOOR POTABLE WATER USE IN LANDSCAPE AREAS. Nonresidential developments shall comply with a local water efficient landscape ordinance or the current California Department of Water Resources' Model Water Efficient Landscape Ordinance (MWELO), whichever is more stringent.

X ☐ L2.0

Notes:
1. The Model Water Efficient Landscape Ordinance (MWELO) is located in the California Code of Regulations, Title 23, Chapter 2.7, Division 2.
2. MWELO and supporting documents, including a water budget calculator, are available at: https://www.water.ca.gov/.

☐ ☒ **5.304.6 OUTDOOR POTABLE WATER USE IN LANDSCAPE AREAS.** For public schools and community colleges, landscape projects as described in Sections 5.304.6.1 and 5.304.6.2 shall comply with the California Department of Water Resources Model Water Efficient Landscape Ordinance (MWELO) commencing with Section 490 of Chapter 2.7, Division 2, Title 23, *California Code of Regulations*, except that the evapotranspiration adjustment factor (ETAF) shall be 0.65 with an additional water allowance for special landscape areas (SLA) of 0.35.

Exception: Any project with an aggregate landscape area of 2,500 square feet or less may comply with the prescriptive measures contained in Appendix D of the MWELO.

5.304.6.1 Newly constructed landscapes. New construction projects with an aggregate landscape area equal to or greater than 500 square feet.

5.304.6.2 Rehabilitated landscapes. Rehabilitated landscape projects with an aggregate landscape area equal to or greater than 1,200 square feet.

DIVISION 5.4 MATERIAL CONSERVATION AND RESOURCE EFFICIENCY

SECTION 5.401 GENERAL
5.401.1 SCOPE. The provisions of this chapter specify the requirements of achieving material conservation, resource efficiency, and greenhouse gas (GHG) emission reduction through protection of buildings from exterior moisture, construction waste diversion, employment of techniques to reduce pollution through recycling of materials, the installation of products with lower GHG emissions and building commissioning or testing and adjusting.

SECTION 5.402 DEFINITIONS
5.402.1 DEFINITIONS. The following terms are defined in Chapter 2 *(and are included here for reference)*

ADJUST. To regulate fluid flow rate and air patterns at the terminal equipment, such as to reduce fan speed or adjust a damper.

BALANCE. To proportion flows within the distribution system, including sub-mains, branches and terminals, according to design quantities.

BUILDING COMMISSIONING. A systematic quality assurance process that spans the entire design and construction process, including verifying and documenting that building systems and components are planned, designed, installed, tested, operated and maintained to meet the owner's project requirements.

BUY CLEAN CALIFORNIA ACT (BCCA). The Buy Clean California Act (BCCA) (Public Contract Code Sections 3500-3505) targets carbon emissions associated with the production of structural steel (hot-rolled sections, hollow structural sections, and plate), concrete reinforcing steel, flat glass, and mineral wool board insulation. The maximum acceptable global warming potential (GWP) limits are established by the Department of General Services (DGS), in consultation with the California Air Resources Board (CARB).

CRADLE-TO-GRAVE. Activities associated with a product or building's life cycle from the extraction stage through disposal stage, and covering modules A1 through C4 in accordance with ISO Standards 14025 and 21930.

ORGANIC WASTE. Food waste, green waste, landscape and pruning wste, nonhazardous wood waste, and food soiled paper waste that is mixed in with food waste.

REFERENCE STUDY PERIOD. The period of use for the building, in years, that will be assumed for life cycle assessment.

TEST. A procedure to determine quantitative performance of a system or equipment

TYPE III ENVIRONMENTAL PRODUCT DECLARATION (EPD). A third-party verified report that summarizes how a product impacts the environment. Type III EPDs can be either product-specific, factory-specific, or industry-wide EPDs. See "Cradle-to-Gate."

FACTORY-SPECIFIC EPD. A product-specific Type III EPD in which the environmental impacts can be attributed to a single manufacturer and manufacturing facility.

INDUSTRY-WIDE EPD (IW-EPD). A Type III EPD in which the environmental impacts are an average of the typical manufacturing impacts for a range of products within the same product category for a group of manufacturers.

PRODUCT-SPECIFIC EPD. A Type III EPD in which the environmental impacts can be attributed to a product design and manufacturer across multiple facilities.

SECTION 5.407 WATER RESISTANCE AND MOISTURE MANAGEMENT
X ☐ L2.0 **5.407.1 WEATHER PROTECTION.** Provide a weather-resistant exterior wall and foundation envelope as required by California Building Code Section 1402.2 (Weather Protection), manufacturer's installation instructions or local ordinance, whichever is more stringent.

5.407.2 MOISTURE CONTROL. Employ moisture control measures by the following methods.

5.407.2.1 Sprinklers. Design and maintain landscape irrigation systems to prevent spray on structures.

5.407.2.2 Entries and openings. Design exterior entries and/or openings subject to foot traffic or wind-driven rain to prevent water intrusion into buildings as follows:

5.407.2.2.1 Exterior door protection. Primary exterior entries shall be covered to prevent water intrusion by using nonabsorbent floor and wall finishes within at least 2 feet around and perpendicular to such openings plus at least one of the following:

1. An installed awning at least 4 feet in depth.
2. The door is protected by a roof overhang at least 4 feet in depth.
3. The door is recessed at least 4 feet.
4. Other methods which provide equivalent protection.

5.407.2.2.2 Flashing. Install flashings integrated with a drainage plane.

SECTION 5.408 CONSTRUCTION WASTE REDUCTION, DISPOSAL AND RECYCLING
5.408.1 CONSTRUCTION WASTE MANAGEMENT. Recycle and/or salvage for reuse a minimum of 65% of the non-hazardous construction and demolition waste in accordance with Section 5.408.1.1, 5.408.1.2 or 5.408.1.3; or meet a local construction and demolition waste management ordinance, whichever is more stringent.

5.408.1.1 Construction waste management plan. Where a local jurisdiction does not have a construction and demolition waste management ordinance, submit a construction waste management plan that:

1. Identifies the construction and demolition waste materials to be diverted from disposal by efficient usage, recycling, reuse on the project or salvage for future use or sale.
2. Determines if construction and demolition waste materials will be sorted on-site (source-separated) or bulk mixed (single stream).
3. Identifies diversion facilities where construction and demolition waste material collected will be taken.
4. Specifies that the amount of construction and demolition waste materials diverted shall be calculated by weight or volume, but not by both.

5.408.1.2 Waste Management Company. Utilize a waste management company that can provide verifiable documentation that the percentage of construction and demolition waste material diverted from the landfill complies with this section.

Note: The owner or contractor shall make the determination if the construction and demolition waste material will be diverted by a waste management company.

Exceptions to Sections 5.408.1.1 and 5.408.1.2:

1. Excavated soil and land-clearing debris.
2. Alternate waste reduction methods developed by working with local agencies if diversion or recycle facilities capable of compliance with this item do not exist.
3. Demolition waste meeting local ordinance or calculated in consideration of local recycling facilities and markets.

5.408.1.3 Waste stream reduction alternative. The combined weight of new construction disposal that does not exceed two pounds per square foot of building area may be deemed to meet the 65% minimum requirement as approved by the enforcing agency.

5.408.1.4 Documentation. Documentation shall be provided to the enforcing agency which demonstrates compliance with Sections 5.408.1.1, through 5.408.1.3. The waste management plan shall be updated as necessary and shall be accessible during construction for examination by the enforcing agency.

Notes:

1. Sample forms found in "A Guide to the California Green Building Standards Code (Nonresidential)" located www.dgs.ca.gov/BSC/Resources/Page-Content/Building-Standards-Commission-Resources-List-Folder/CALGreen may be used to assist in documenting compliance with the waste management plan.
2. Mixed construction and demolition debris processors can be located at the California Department of Resources Recycling and Recovery (CalRecycle).

☐ ☒ **5.408.2 UNIVERSAL WASTE. [A]** Additions and alterations to a building or tenant space that meet the scoping provisions in Section 301.3 for nonresidential additions and alterations, shall require verification that Universal Waste items such as fluorescent lamps and ballast and mercury containing thermostats as well as other California prohibited Universal Waste materials are disposed of properly and are diverted from landfills. A list of prohibited Universal Waste materials shall be included in the construction documents.

Note: Refer to the Universal Waste Rule link at: http://www.dtsc.ca.gov/universalwaste/

☒ ☐ DIV. 1 **5.408.3 EXCAVATED SOIL AND LAND CLEARING DEBRIS.** 100 percent of trees, stumps, rocks and associated vegetation and soils resulting primarily from land clearing shall be reused or recycled. For a phased project, such material may be stockpiled on site until the storage site is developed.

Exception: Reuse, either on or off-site, of vegetation or soil contaminated by disease or pest infestation.

Notes:

1. If contamination by disease or pest infestation is suspected, contact the County Agricultural Commissioner and follow its direction for recycling or disposal of the material.
2. For a map of know pest and/or disease quarantine zones, consult with the California Department of Food and Agriculture. (www.cdfa.ca.gov)

SECTION 5.409 LIFE CYCLE ASSESSMENT
5.409.1 SCOPE. [BSC-CG] Effective July 1, 2024, projects consisting of newly constructed building(s) with a combined floor area of 100,000 square feet or greater shall comply with either Section 5.409.2 or Section 5.409.3. Alteration(s) to existing building(s) where the combined altered floor area is 100,000 square feet or greater shall comply with either Section 5.105.2, 5.409.2, or 5.409.3. Addition(s) to existing building(s) where the total floor area combined with the existing building(s) is 100,000 square feet or greater shall comply with either Section 5.105.2, Section 5.409.2, or Section 5.409.3. Effective January 1, 2026, the combined floor area shall be 50,000 square feet or greater.

[DSA-SS] Projects consisting of newly constructed building(s) with a combined floor area of 50,000 square feet or greater shall comply with either Section 5.409.2 or Section 5.409.3. Alteration(s) to existing building(s) where the combined altered floor area is 50,000 square feet or greater shall comply with either Section 5.105.2, 5.409.2, or 5.409.3. Addition(s) to existing building(s) where the total floor area combined with the existing building(s) is 50,000 square feet or greater shall comply with either Section 5.105.2, Section 5.409.2, or Section 5.409.3.

DISCLAIMER: *THIS DOCUMENT IS PROVIDED AND INTENDED TO BE USED AS A MEANS TO INDICATE AREAS OF COMPLIANCE WITH THE CALIFORNIA GREEN BUILDING STANDARDS (CALGREEN) CODE. DUE TO THE VARIABLES BETWEEN BUILDING DEPARTMENT JURISDICTIONS, THIS CHECKLIST IS TO BE USED ON AN INDIVIDUAL PROJECT BASIS AND MAY BE MODIFIED BY THE END USER TO MEET THOSE INDIVIDUAL NEEDS. THE END USER ASSUMES ALL RESPONSIBILITY ASSOCIATED WITH THE USE OF THIS DOCUMENT, INCLUDING VERIFICATION WITH THE FULL CODE.*

PBK
ARCHITECT PBK Architects, Inc.
PBK.com
SAN LUIS OBISPO
408 Higuera Street, Ste 100
San Luis Obispo, CA 93401
805-329-3076

FIRE STATION #44
COASTSIDE FIRE PROTECTION DISTRICT
501 STETSON STREET
MOSS BEACH, CA 94038
PLAN CHECK 02 RESPONSE

BID SET

1ST 2ND
KEY PLAN
PLAN NORTH TRUE NORTH

CLIENT
COASTSIDE FIRE PROTECTION DISTRICT
PROJECT NUMBER
230137
DATE 03/13/2026
DRAWN BY: KF/OS CHKED BY: AD
REVISIONS

#	DESCRIPTION	DATE

This document is for plan review only

CHECKLISTS
COMPLIANCE
CALGREEN

G0.33

5/29/2026 4:36:03 PM

2022 CALIFORNIA GREEN BUILDING STANDARDS CODE
NONRESIDENTIAL MANDATORY MEASURES, SHEET 3 (July 2024 Supplement)

Y = YES
N/A = NOT APPLICABLE
RESPON. PARTY = RESPONSIBLE PARTY (ie: ARCHITECT, ENGINEER, OWNER, CONTRACTOR, INSPECTOR ETC.)

Y	N/A	RESPON. PARTY
☐	X	

5.409.2 Whole building life cycle assessment. Projects shall conduct a cradle-to-grave whole building life cycle assessment performed in accordance with ISO 14040 and ISO 14044, excluding operating energy, and demonstrating a minimum 10-percent reduction in global warming potential (GWP) as compared to a reference baseline building of similar size, function, complexity, type of construction, material specification, and location that meets the requirements of the California Energy Code currently in effect. Software used to conduct the whole building life cycle assessment, including reference baseline building, shall have a data set compliant with ISO 14044, and ISO 21930 or EN 15804, and the software shall conform to ISO 21931 and/or EN 15978. The software tools and data sets shall be the same for evaluation of both the baseline building and the proposed building.

Notes:
1. Software for calculating whole building life cycle assessment is available for free at Athena Sustainable Materials Institute (https://calculatelca.com/software/impact-estimator/) and OneClick LCA-Planetary (www.oneclicklca.com/planetary). Paid versions include, but are not limited to, Sphera GaBi Solutions (gabi.sphera.com), SimaPro (simapro.com), One-Click LCA (www.oneclicklca.com) and Tally for Revit (apps.autodesk.com).

2. ASTM E2921-22 "Standard Practice for Minimum Criteria for Comparing Whole Building Life Cycle Assessments for Use with Building Codes, Standards, and Rating Systems" may be consulted for the assessment.

3. In addition to the required documentation specified in Section 5.409.2.3, Worksheet WS-9 may be required by the enforcing entity to demonstrate compliance with the requirements.

5.409.2.1 Building components. Building enclosure components included in the assessment shall be limited to glazing assemblies, insulation, and exterior finishes. Primary and secondary structural members included in the assessment shall be limited to footings and foundations, and structural columns, beams, walls, roofs, and floors.

5.409.2.2 Reference study period. The reference study period of the proposed building shall be equal to the reference baseline building and shall be 60 years.

5.409.2.3 Verification of compliance. A summary of the GWP analysis produced by the software and Worksheet WS-4 signed by the design professional of record shall be provided in the construction documents as documentation of compliance. A copy of the whole building life cycle assessment which includes the GWP analysis produced by the software, in addition to maintenance and training information, shall be included in the operation and maintenance manual and shall be provided to the owner at the close of construction. The enforcing agency may require inspection and inspection reports in accordance with Sections 702.2 and 703.1 during and at completion of construction to demonstrate substantial conformance. Inspection shall be performed by the design professional of record or third party acceptable to the enforcing agency.

Y	N/A	RESPON. PARTY
X	☐	M0.2

5.409.3 Product GWP compliance—prescriptive path. Each product that is permanently installed and listed in Table 5.409.3 shall have a Type III environmental product declaration (EPD), either product-specific or factory-specific.

TABLE 5.409.3
PRODUCT GWP LIMITS

BUY CLEAN CALIFORNIA MATERIALS PRODUCT CATEGORY[1]	MAXIMUM ACCEPTABLE GWP VALUE (unfabricated) ($GWP_{allowed}$)	UNIT OF MEASUREMENT
Hot-rolled structural steel sections	1.77	MT CO_2e/MT
Hollow structural sections	3.00	MT CO_2e/MT
Steel plate	2.61	MT CO_2e/MT
Concrete reinforcing steel	1.56	MT CO_2e/MT
Flat glass	2.50	MT CO_2e/MT [4]
Light-density mineral wool board insulation	5.83	kg CO_2e/MT
Heavy-density mineral wool board insulation	14.28	kg CO_2e/MT
Concrete, Ready-Mixed[2], [3]		
CONCRETE PRODUCT CATEGORY	**MAXIMUM GWP ALLOWED VALUE ($GWP_{allowed}$)**	**UNIT OF MEASUREMENT**
up to 2499 psi	450	kg CO_2e/m^3
2500~3499 psi	489	kg CO_2e/m^3
3500~4499 psi	566	kg CO_2e/m^3
4500~5499 psi	661	kg CO_2e/m^3
5500~6499 psi	701	kg CO_2e/m^3
6500 psi and greater	799	kg CO_2e/m^3
Concrete, Lightweight Ready-Mixed[2]		
CONCRETE PRODUCT CATEGORY	**MAXIMUM GWP ALLOWED VALUE ($GWP_{allowed}$)**	**UNIT OF MEASUREMENT**
up to 2499 psi	875	kg CO_2e/m^3
2500~3499 psi	956	kg CO_2e/m^3
3500~4499 psi	1039	kg CO_2e/m^3

1. The GWP values of the products listed in Table 5.409.3 are based on 175 percent of Buy Clean California Act (BCCA) GWP values, except for concrete products which are not included in the BCCA.
2. For concrete, 175 percent of the National Ready Mixed Concrete Association (NRMCA) 2022 version 3 Pacific Southwest regional benchmark values are used for the GWP allowed, except for High Early Strength.
3. Concrete High Early Strength ready-mixed shall be calculated at 130 percent of the ready-mixed concrete GWP allowed values for each product category.
4. The GWP unit for flat glass has been adjusted to correct an error in the express terms. With the revised unit (MT CO2e/MT), reported GWP values will align with industry data as published in the CLF North American Material Baselines (2023).

5.409.3.1 Products shall not exceed the maximum GWP value specified in Table 5.409.3.

Exception: Concrete may be considered one product category to meet compliance with this section. A weighted average of the maximum GWP for all concrete mixes installed in the project shall be less than the weighted average maximum GWP allowed per Table 5.409.3 using Exception Equation 5.409.3.1. Calculations shall be performed with consistent units of measurement for the material quantity and the GWP value.

For the purposes of this exception, industry-wide EPDs are acceptable.

Exception EQUATION 5.409.3.1

$GWP_n < GWP_{allowed}$
where
$GWP_n = \Sigma\ (GWP_n)(v_n)$
and
$GWP_{allowed} = \Sigma\ (GWP_{allowed})(v_n)$
and
$_n$ = each concrete mix installed in the project
GWP_n = the GWP for concrete mix $_n$ per concrete mix EPD, in kg CO2e/m3
$GWP_{allowed}$ = the GWP potential allowed for concrete mix $_n$ per Table 5.409.3
v_n = the volume of concrete mix $_n$ installed in the project, in m3

Y	N/A	RESPON. PARTY
X	☐	A1.1

5.409.3.2 Verification of compliance. Calculations to demonstrate compliance, Type III EPDs for products required to comply, if included in the project, and Worksheet WS-5 signed by the design professional of record shall be provided on the construction documents. Updated EPDs for products used in construction shall be provided to the owner at the close of construction and to the enforcement entity upon request. The enforcing agency may require inspection and inspection reports in accordance with Sections 702.2 and 703.1 during and at completion of construction to demonstrate substantial conformance. Inspection shall be performed by the design professional of record or third party acceptable to the enforcing agency.

SECTION 5.410 BUILDING MAINTENANCE AND OPERATIONS

5.410.1 RECYCLING BY OCCUPANTS. Provide readily accessible areas that serve the entire building and are identified for the depositing, storage and collection of non-hazardous materials for recycling, including (at a minimum) paper, corrugated cardboard, glass, plastics, organic waste, and metals or meet a lawfully enacted local recycling ordinance, if more restrictive.

Y	N/A	RESPON. PARTY
☐	X	

Exception: Rural jurisdictions that meet and apply for the exemption in Public Resources Code 42649.82 (a)(2)(A) et seq. shall also be exempt from the organic waste portion of this section.

5.410.1.1 Additions. All additions conducted within a 12-month period under single or multiple permits, resulting in an increase of 30% or more in floor area, shall provide recycling areas on site.

Exception: Additions within a tenant space resulting in less than a 30% increase in the tenant space floor area.

5.410.1.2 Sample ordinance. Space allocation for recycling areas shall comply with Chapter 18, Part 3, Division 30 of the *Public Resources Code*. Chapter 18 is known as the California Solid Waste Reuse and Recycling Access Act of 1991 (Act).

Note: A sample ordinance for use by local agencies may be found in Appendix A of the document at the CalRecycle's web site.

5.410.2 COMMISSIONING. [N] New buildings 10,000 square feet and over. For new buildings 10,000 square feet and over, building commissioning shall be included in the design and construction processes of the building project to verify that the building systems and components meet the owner's or owner representative's project requirements. Commissioning shall be performed in accordance with this section by trained personnel with experience on projects of comparable size and complexity. For I-occupancies that are not regulated by OSHPD or for I-occupancies and L-occupancies that are not regulated y the California Energy Code Section 100.0 Scope, all requirements in Sections 5.410.2 through 5.410.2.6 shall apply.

Note: For energy-related systems under the scope (Section 100) of the California Energy Code, including heating, ventilation, air conditioning (HVAC) systems and controls, indoor lighting systems and controls, as well as water heating systems and controls, refer to California Energy Code Section 120.8 for commissioning requirements

Commissioning requirements shall include:

1. Owner's or Owner representative's project requirements.
2. Basis of design.
3. Commissioning measures shown in the construction documents.
4. Commissioning plan.
5. Functional performance testing.
6. Documentation and training.
7. Commissioning report.

Exceptions:

1. Unconditioned warehouses of any size.
2. Areas less than 10,000 square feet used for offices or other conditioned accessory spaces within unconditioned warehouses.
3. Tenant improvements less than 10,000 square feet as described in Section 303.1.1.
4. Open parking garages of any size, or open parking garage areas, of any size, within a structure.

Note: For the purposes of this section, unconditioned shall mean a building, area or room which does not provide heating and/or air conditioning.

Informational Notes:

1. . Functional performance testing for heating, ventilation, air conditioning systems and lighting controls must be performed in compliance with the *California Energy Code*.

5.410.2.1 Owner's or Owner Representative's Project Requirements (OPR). [N] The expectations and requirements of the building appropriate to its phase shall be documented before the design phase of the project begins. This documentation shall include the following:
1. Environmental and sustainability goals.
2. Building sustainable goals.
3. Indoor environmental quality requirements.
4. Project program, including facility functions and hours of operation, and need for after hours operation.
5. Equipment and systems expectations.
6. Building occupant and operation and maintenance (O&M) personnel expectations.

5.410.2.2 Basis of Design (BOD). [N] A written explanation of how the design of the building systems meets the OPR shall be completed at the design phase of the building project. The Basis of Design document shall cover the following systems:

1. Renewable energy systems.
2. Landscape irrigation systems.
3. Water reuse system.

5.410.2.3 Commissioning plan. [N] Prior to permit issuance a commissioning plan shall be completed to document how the project will be commissioned. The commissioning plan shall include the following:
1. General project information.
2. Commissioning goals.
3. Systems to be commissioned. Plans to test systems and components shall include:
   a. An explanation of the original design intent.
   b. Equipment and systems to be tested, including the extent of tests.
   c. Functions to be tested.
   d. Conditions under which the test shall be performed.
   e. Measurable criteria for acceptable performance.
4. Commissioning team information.
5. Commissioning process activities, schedules and responsibilities. Plans for the completion of commissioning shall be included.

5.410.2.4 Functional performance testing. [N] Functional performance tests shall demonstrate the correct installation and operation of each component, system and system-to-system interface in accordance with the approved plans and specifications. Functional performance testing reports shall contain information addressing each of the building components tested, the testing methods utilized, and include any readings and adjustments made.

5.410.2.5 Documentation and training. [N] A Systems Manual and Systems Operations Training are required, including Occupational Safety and Health Act (OSHA) requirements in *California Code of Regulations* (CCR), Title 8, Section 5142, and other related regulations.

5.410.2.5.1 Systems manual. [N] Documentation of the operational aspects of the building shall be completed within the systems manual and delivered to the building owner or representative. The systems manual shall include the following:
1. Site information, including facility description, history and current requirements.
2. Site contact information.
3. Basic operations and maintenance, including general site operating procedures, basic troubleshooting, recommended maintenance requirements, site events log.
4. Major systems.
5. Site equipment inventory and maintenance notes.
6. A copy of verifications required by the enforcing agency or this code.
7. Other resources and documentation, if applicable.

5.410.2.5.2 Systems operations training. [N] A program for training of the appropriate maintenance staff for each equipment type and/or system shall be developed and documented in the commissioning report and shall include the following:
1. System/equipment overview (what it is, what it does and with what other systems and/or equipment it interfaces).
2. Review and demonstration of servicing/preventive maintenance.
3. Review of the information in the Systems Manual.
4. Review of the record drawings on the system/equipment.

5.410.2.6 Commissioning report. [N] A report of commissioning process activities undertaken through the design and construction phases of the building project shall be completed and provided to the owner or representative.

Y	N/A	RESPON. PARTY
X	☐	M0.2

5.410.4 TESTING AND ADJUSTING. New buildings less than 10,000 square feet. Testing and adjusting of systems shall be required for new buildings less than 10,000 square feet or new systems to serve an addition or alteration subject to Section 303.1.

Y	N/A	RESPON. PARTY

5.410.4.2 (Reserved)

Note: For energy-related systems under the scope (Section 100) of the California Energy Code, including heating, ventilation, air conditioning (HVAC) systems and controls, indoor lighting system and controls, as well as water heating systems and controls, refer to California Energy Code Section 120.8 for commissioning requirements and Sections 120.5, 120.6, 130.4, and 140.9(b)3 for additional testing requirements of specific systems.

5.410.4.2 Systems. Develop a written plan of procedures for testing and adjusting systems. Systems to be included for testing and adjusting shall include at a minimum, as applicable to the project:

1. Renewable energy systems.
2. Landscape irrigation systems.
3. Water reuse systems.

5.410.4.3 Procedures. Perform testing and adjusting procedures in accordance with manufacturer's specifications and applicable standards on each system.

5.410.4.3.1 HVAC balancing. In addition to testing and adjusting, before a new space-conditioning system serving a building or space is operated for normal use, the system shall be balanced in accordance with the procedures defined by the Testing Adjusting and Balancing Bureau National Standards; the National Environmental Balancing Bureau Procedural Standards; Associated Air Balance Council National Standards or as approved by the enforcing agency.

5.410.4.4 Reporting. After completion of testing, adjusting and balancing, provide a final report of testing signed by the individual responsible for performing these services.

5.410.4.5 Operation and maintenance (O & M) manual. Provide the building owner or representative with detailed operating and maintenance instructions and copies of guaranties/warranties for each system. O & M instructions shall be consistent with OSHA requirements in CCR, Title 8, Section 5142, and other related regulations.

5.410.4.5.1 Inspections and reports. Include a copy of all inspection verifications and reports required by the enforcing agency.

DIVISION 5.5 ENVIRONMENTAL QUALITY

SECTION 5.501 GENERAL

5.501.1 SCOPE. The provisions of this chapter shall outline means of reducing the quantity of air contaminants that are odorous, irritating, and/or harmful to the comfort and well-being of a building's installers, occupants and neighbors.

SECTION 5.502 DEFINITIONS

5.502.1 DEFINITIONS. The following terms are defined in Chapter 2 *(and are included here for reference)*

ARTERIAL HIGHWAY. A general term denoting a highway primarily for through traffic usually on a continuous route.

A-WEIGHTED SOUND LEVEL (dBA). The sound pressure level in decibels as measured on a sound level meter using the internationally standardized A-weighting filter or as computed from sound spectral data to which A-weighting adjustments have been made.

1 BTU/HOUR. British thermal units per hour, also referred to as Btu. The amount of heat required to raise one pound of water one degree Fahrenheit per hour, a common measure of heat transfer rate. A ton of refrigeration is 12,000 Btu, the amount of heat required to melt a ton (2,000 pounds) of ice at 32^{0} Fahrenheit.

COMMUNITY NOISE EQUIVALENT LEVEL (CNEL). A metric similar to the day-night average sound level (Ldn), except that a 5 decibel adjustment is added to the equivalent continuous sound exposure level for evening hours (7pm to 10pm) in addition to the 10 dB nighttime adjustment used in the Ldn.

COMPOSITE WOOD PRODUCTS. Composite wood products include hardwood plywood, particleboard and medium density fiberboard. "Composite wood products" does not include hardboard, structural plywood, structural panels, structural composite lumber, oriented strand board, glued laminated timber, timber, prefabricated wood I–joists or finger–jointed lumber, all as specified in California Code of Regulations (CCR), Title 17, Section 93120.1(a).

Note: See CCR, Title 17, Section 93120.1.

DAY-NIGHT AVERAGE SOUND LEVEL (Ldn). The A-weighted equivalent continuous sound exposure level for a 24-hour period with a 10 dB adjustment added to sound levels occurring during nighttime hours (10p.m. to 7 a.m.).

DECIBEL (db). A measure on a logarithmic scale of the magnitude of a particular quantity (such as sound pressure, sound power, sound intensity) with respect to a reference quantity.

ELECTRIC VEHICLE (EV). An automotive-type vehicle for on-road use, such as passenger automobiles, buses, trucks, vans, neighborhood electric vehicles, electric motorcycles, and the like, primarily powered by an electric motor that draws current from a rechargeable storage battery, fuel cell, photovoltaic array, or other source of electric current. Plug-in hybrid electric vehicles (PHEV) are considered electric vehicles. For purposes of the *California Electrical Code*, off-road, self-propelled electric vehicles, such as industrial trucks, hoists, lifts, transports, golf carts, airline ground support equipment, tractors, boats, and the like, are not included.

ELECTRIC VEHICLE CHARGING STATION(S) (EVCS)). One or more spaces intended for charging electric vehicles.

ELECTRIC VEHICLE SUPPLY EQUIPMENT (EVSE). The conductors, including the ungrounded, grounded, and equipment grounding conductors and the electric vehicle connectors, attachment plugs, and all other fittings, devices, power outlets, or apparatus installed specifically for the purpose of transferring energy between the premises wiring and the electric vehicle.

ENERGY EQUIVALENT (NOISE) LEVEL (Leq). The level of a steady noise which would have the same energy as the fluctuating noise level integrated over the time of period of interest.

EXPRESSWAY. An arterial highway for through traffic which may have partial control of access, but which may or may not be divided or have grade separations at intersections.

FREEWAY. A divided arterial highway with full control of access and with grade separations at intersections.

GLOBAL WARMING POTENTIAL (GWP). The radiative forcing impact of one mass-based unit of a given greenhouse gas relative to an equivalent unit of carbon dioxide over a given period of time. Carbon dioxide is the reference compound with a GWP of one.

GLOBAL WARMING POTENTIAL VALUE (GWP VALUE). A 100-year GWP value published by the Intergovernmental Panel on Climate Change (IPCC) in either its Second Assessment Report (SAR) (IPCC, 1995); or its Fourth Assessment A-3 Report (AR4) (IPCC, 2007). The SAR GWP values are found in column "SAR (100-yr)" of Table 2.14.; the AR4 GWP values are found in column "100 yr" of Table 2.14.

HIGH-GWP REFRIGERANT. A compound used as a heat transfer fluid or gas that is: (a) a chlorofluorocarbon, a hdrochlorofluorocarbon, a hydrofluorocarbon, a perfluorocarbon, or any compound or blend of compounds, with a GWP value equal to or greater than 150, or (B) any ozone depleting substance as defined in Title 40 of the Code of Federal Regulations, Part 82, sec.82.3 (as amended March 10, 2009).

LONG RADIUS ELBOW. Pipe fitting installed between two lengths of pipe or tubing to allow a change of direction, with a radius 1.5 times the pipe diameter.

LOW-GWP REFRIGERANT. A compound used as a heat transfer fluid or gas that: (A) has a GWP value less than 150, and (B) is not an ozone depleting substance as defined in Title 40 of the Code of Federal Regulations, Part 82, sec.82.3 (as amended March 10, 2009).

MERV. Filter minimum efficiency reporting value, based on ASHRAE 52.2–1999.

MAXIMUM INCREMENTAL REACTIVITY (MIR). The maximum change in weight of ozone formed by adding a compound to the "Base REactive Organic Gas (ROG) Mixture" per weight of compound added, expressed to hundreths of a gram (g O^3/g ROC).

PRODUCT-WEIGHTED MIR (PWMIR). The sum of all weighted-MIR for all ingredients in a product subject to this article. The PWMIR is the total product reactivity expressed to hundredths of a gram of ozone formed per gram of product (excluding container and packaging).

PSIG. Pounds per square inch, guage.

REACTIVE ORGANIC COMPOUND (ROC). Any compound that has the potential, once emitted, to contribute to ozone formation in the troposphere.

SCHRADER ACCESS VALVES. Access fittings with a valve core installed.

SHORT RADIUS ELBOW. Pipe fitting installed between two lengths of pipe or tubing to allow a change of direction, with a radius 1.0 times the pipe diameter.

SUPERMARKET. For the purposes of Section 5.508.2, a supermarket is any retail food facility with 8,000 square feet or more conditioned area, and that utilizes either refrigerated display cases, or walk-in coolers or freezers connected to remote compressor units or condensing units.

VOC. A volatile organic compound broadly defined as a chemical compound based on carbon chains or rings with vapor pressures greater than 0.1 millimeters of mercury at room temperature. These compounds typically contain hydrogen and may contain oxygen, nitrogen and other elements. See CCR Title 17, Section 94508(a).

Note: Where specific regulations are cited from different agencies such as SCAQMD, ARB, etc., the VOC definition included in that specific regulation is the one that prevails for the specific measure in question.

Y	N/A	RESPON. PARTY
☐	X	

SECTION 5.503 FIREPLACES

5.503.1 FIREPLACES. Install only a direct-vent sealed-combustion gas or sealed wood-burning fireplace, or a sealed woodstove or pellet stove, and refer to residential requirements in the California Energy Code, Title 24, Part 6, Subchapter 7, Section 150. Woodstoves, pellet stoves and fireplaces shall comply with applicable local ordinances.

5.503.1.1 Woodstoves. Woodstoves and pellet stoves shall comply with U.S. EPA New Source Performance Standards (NSPS) emission limits as applicable, and shall have a permanent label indicating they are certified to meet the emission limits.

SECTION 5.504 POLLUTANT CONTROL

Y	N/A	RESPON. PARTY
X	☐	M0.1

5.504.1 TEMPORARY VENTILATION. The permanent HVAC system shall only be used during construction if necessary to condition the building or areas of addition or alteration within the required temperature range for material and equipment installation. If the HVAC system is used during construction, use return air filters with a Minimum Efficiency Reporting Value (MERV) of 8, based on ASHRAE 52.2-1999, or an average efficiency of 30% based on ASHRAE 52.1-1992. Replace all filters immediately prior to occupancy, or, if the building is occupied during alteration, at the conclusion of construction.

Y	N/A	RESPON. PARTY
X	☐	M0.1

5.504.3 Covering of duct openings and protection of mechanical equipment during construction. At the time of rough installation and during storage on the construction site until final startup of the heating, cooling and ventilation equipment, all duct and other related air distribution component openings shall be covered with tape, plastic, sheetmetal or other methods acceptable to the enforcing agency to reduce the amount of dust, water and debris which may enter the system.

Y	N/A	RESPON. PARTY
X	☐	DIV. 1

5.504.4 FINISH MATERIAL POLLUTANT CONTROL. Finish materials shall comply with Sections 5.504.4.1 through 5.504.4.6.

5.504.4.1 Adhesives, sealants and caulks. Adhesives, sealants, and caulks used on the project shall meet the requirements of the following standards:
1. Adhesives, adhesive bonding primers, adhesive primers, sealants, sealant primers and caulks shall comply with local or regional air pollution control or air quality management district rules where applicable, or SCAQMD Rule 1168 VOC limits, as shown in Tables 5.504.4.1 and 5.504.4.2. Such products also shall comply with the Rule 1168 prohibition on the use of certain toxic compounds (*chloroform, ethylene dichloride, methylene chloride, perchloroethylene, and trichloroethylene*), except for aerosol products as specified in subsection 2, below.

2. Aerosol adhesives, and smaller unit sizes of adhesives, and sealant or caulking compounds (in units of product, less packaging, which do not weigh more than one pound and do not consist of more than 16 fluid ounces) shall comply with statewide VOC standards and other requirements, including prohibitions on use of certain toxic compounds, of *California Code of Regulations*, Title 17, commencing with Section 94507.

TABLE 5.504.4.1 - ADHESIVE VOC LIMIT[1,2]
Less Water and Less Exempt Compounds in Grams per Liter

ARCHITECTURAL APPLICATIONS	CURRENT VOC LIMIT
INDOOR CARPET ADHESIVES	50
CARPET PAD ADHESIVES	50
OUTDOOR CARPET ADHESIVES	150
WOOD FLOORING ADHESIVES	100
RUBBER FLOOR ADHESIVES	60
SUBFLOOR ADHESIVES	50
CERAMIC TILE ADHESIVES	65
VCT & ASPHALT TILE ADHESIVES	50
DRYWALL & PANEL ADHESIVES	50
COVE BASE ADHESIVES	50
MULTIPURPOSE CONSTRUCTION ADHESIVES	70
STRUCTURAL GLAZING ADHESIVES	100
SINGLE-PLY ROOF MEMBRANE ADHESIVES	250
OTHER ADHESIVES NOT SPECIFICALLY LISTED	50
SPECIALTY APPLICATIONS	
PVC WELDING	510
CPVC WELDING	490
ABS WELDING	325
PLASTIC CEMENT WELDING	250
ADHESIVE PRIMER FOR PLASTIC	550
CONTACT ADHESIVE	80
SPECIAL PURPOSE CONTACT ADHESIVE	250
STRUCTURAL WOOD MEMBER ADHESIVE	140
TOP & TRIM ADHESIVE	250
SUBSTRATE SPECIFIC APPLICATIONS	
METAL TO METAL	30
PLASTIC FOAMS	50
POROUS MATERIAL (EXCEPT WOOD)	50
WOOD	30
FIBERGLASS	80

1. IF AN ADHESIVE IS USED TO BOND DISSIMILAR SUBSTRATES TOGETHER, THE ADHESIVE WITH THE HIGHEST VOC CONTENT SHALL BE ALLOWED.

2. FOR ADDITIONAL INFORMATION REGARDING METHODS TO MEASURE THE VOC CONTENT SPECIFIED IN THIS TABLE, SEE SOUTH COAST AIR QUALITY MANAGEMENT DISTRICT RULE 1168, www.arb.ca.gov/DRDB/SC/CURHTML/R1168.PDF

TABLE 5.504.4.2 - SEALANT VOC LIMIT
Less Water and Less Exempt Compounds in Grams per Liter

SEALANTS	CURRENT VOC LIMIT
ARCHITECTURAL	250
MARINE DECK	760
NONMEMBRANE ROOF	300
ROADWAY	250
SINGLE-PLY ROOF MEMBRANE	450
OTHER	420
SEALANT PRIMERS	
ARCHITECTURAL	
NONPOROUS	250
POROUS	775
MODIFIED BITUMINOUS	500
MARINE DECK	760
OTHER	750

NOTE: FOR ADDITIONAL INFORMATION REGARDING METHODS TO MEASURE THE VOC CONTENT SPECIFIED IN THESE TABLES, SEE SOUTH COAST AIR QUALITY MANAGEMENT DISTRICT RULE 1168.

DISCLAIMER: *THIS DOCUMENT IS PROVIDED AND INTENDED TO BE USED AS A MEANS TO INDICATE AREAS OF COMPLIANCE WITH THE CALIFORNIA GREEN BUILDING STANDARDS (CALGREEN) CODE. DUE TO THE VARIABLES BETWEEN BUILDING DEPARTMENT JURISDICTIONS, THIS CHECKLIST IS TO BE USED ON AN INDIVIDUAL PROJECT BASIS AND MAY BE MODIFIED BY THE END USER TO MEET THOSE INDIVIDUAL NEEDS. THE END USER ASSUMES ALL RESPONSIBILITY ASSOCIATED WITH THE USE OF THIS DOCUMENT, INCLUDING VERIFICATION WITH THE FULL CODE.*

PBK
ARCHITECT PBK Architects, Inc.
PBK.com
SAN LUIS OBISPO
408 Higuera Street, Ste 100
San Luis Obispo, CA 93401
805-329-3076

FIRE STATION #44
COASTSIDE FIRE PROTECTION DISTRICT
501 STETSON STREET
MOSS BEACH, CA 94038
PLAN CHECK 02 RESPONSE

BID SET

1ST 2ND
KEY PLAN
PLAN NORTH TRUE NORTH

CLIENT
COASTSIDE FIRE PROTECTION DISTRICT
PROJECT NUMBER
230137
DATE 03/13/2026
DRAWN BY: KF/OS CHKED BY: AD
REVISIONS

#	DESCRIPTION	DATE

This document is for plan review only

CHECKLISTS COMPLIANCE CALGREEN

G0.34

2022 CALIFORNIA GREEN BUILDING STANDARDS CODE
NONRESIDENTIAL MANDATORY MEASURES, SHEET 4 (July 2024 Supplement)

Y = YES
N/A = NOT APPLICABLE
RESPON. PARTY = RESPONSIBLE PARTY (ie: ARCHITECT, ENGINEER, OWNER, CONTRACTOR, INSPECTOR ETC.)

5.504.4.3 Paints and coatings. Architectural paints and coatings shall comply with VOC limits in Table 1 of the ARB Architectural Coatings Suggested Control Measure, as shown in Table 5.504.4.3, unless more stringent local limits apply. The VOC content limit for coatings that do not meet the definitions for the specialty coatings categories listed in Table 5.504.4.3 shall be determined by classifying the coating as a Flat, Nonflat or Nonflat-High Gloss coating, based on its gloss, as defined in Subsections 4.21, 4.36 and 4.37 of the 2007 California Air Resources Board Suggested Control Measure, and the corresponding Flat, Nonflat or Nonflat-High Gloss VOC limit in Table 5.504.4.3 shall apply.

5.504.4.3.1 Aerosol Paints and coatings. Aerosol paints and coatings shall meet the PWMIR Limits for ROC in Section 94522(a)(3) and other requirements, including prohibitions on use of certain toxic compounds and ozone depleting substances, in Sections 94522(c)(2) and (d)(2) of *California Code of Regulations,* Title 17, commencing with Section 94520; and in areas under the jurisdiction of the Bay Area Air Quality Management District additionally comply with the percent VOC by weight of product limits of Regulation 8 Rule 49.

TABLE 5.504.4.3 - VOC CONTENT LIMITS FOR ARCHITECTURAL COATINGS[2,3]

GRAMS OF VOC PER LITER OF COATING, LESS WATER & LESS EXEMPT COMPOUNDS

COATING CATEGORY	CURRENT VOC LIMIT
FLAT COATINGS	50
NONFLAT COATINGS	100
NONFLAT HIGH GLOSS COATINGS	150
SPECIALTY COATINGS	
ALUMINUM ROOF COATINGS	400
BASEMENT SPECIALTY COATINGS	400
BITUMINOUS ROOF COATINGS	50
BITUMINOUS ROOF PRIMERS	350
BOND BREAKERS	350
CONCRETE CURING COMPOUNDS	350
CONCRETE/MASONRY SEALERS	100
DRIVEWAY SEALERS	50
DRY FOG COATINGS	150
FAUX FINISHING COATINGS	350
FIRE RESISTIVE COATINGS	350
FLOOR COATINGS	100
FORM-RELEASE COMPOUNDS	250
GRAPHIC ARTS COATINGS (SIGN PAINTS)	500
HIGH-TEMPERATURE COATINGS	420
INDUSTRIAL MAINTENANCE COATINGS	250
LOW SOLIDS COATINGS[1]	120
MAGNESITE CEMENT COATINGS	450
MASTIC TEXTURE COATINGS	100
METALLIC PIGMENTED COATINGS	500
MULTICOLOR COATINGS	250
PRETREATMENT WASH PRIMERS	420
PRIMERS, SEALERS, & UNDERCOATERS	100
REACTIVE PENETRATING SEALERS	350
RECYCLED COATINGS	250
ROOF COATINGS	50
RUST PREVENTATIVE COATINGS	250
SHELLACS:	
CLEAR	730
OPAQUE	550
SPECIALTY PRIMERS, SEALERS & UNDERCOATERS	100
STAINS	250
STONE CONSOLIDANTS	450
SWIMMING POOL COATINGS	340
TRAFFIC MARKING COATINGS	100
TUB & TILE REFINISH COATINGS	420
WATERPROOFING MEMBRANES	250
WOOD COATINGS	275
WOOD PRESERVATIVES	350
ZINC-RICH PRIMERS	340

1. GRAMS OF VOC PER LITER OF COATING, INCLUDING WATER & EXEMPT COMPOUNDS
2. THE SPECIFIED LIMITS REMAIN IN EFFECT UNLESS REVISED LIMITS ARE LISTED IN SUBSEQUENT COLUMNS IN THE TABLE.
3. VALUES IN THIS TABLE ARE DERIVED FROM THOSE SPECIFIED BY THE CALIFORNIA AIR RESOURCES BOARD, ARCHITECTURAL COATINGS SUGGESTED CONTROL MEASURE, FEB. 1, 2008. MORE INFORMATION IS AVAILABLE FROM THE AIR RESOURCES BOARD.

5.504.4.3.2 Verification. Verification of compliance with this section shall be provided at the request of the enforcing agency. Documentation may include, but is not limited to, the following:
1. Manufacturer's product specification
2. Field verification of on-site product containers

5.504.4.4 Carpet Systems.
All carpet installed in the building interior shall meet the requirements of the California Department of Public Health, "Standard Method for the Testing and Evaluation of Volatile Organic Chemical Emissions from Indoor Sources Using Environmental Chambers." Version 1.2, January 2017 (Emission testing method for California Specifications 01350).

See California Department of Public Health's website for certification programs and testing labs. https://www.cdph.ca.gov/Programs/CCDPHP/DEODC/EHLB/IAQ/Pages/VOC.aspx#material

5.504.4.4.1 Carpet cushion. All carpet cushion installed in the building interior shall meet the requirements of the California Department of Public Health,"Standard Method for the Testing and Evaluation of Volatile Organic Chemical Emissions from Indoor Sources Using Environmental Chambers,"Version 1.2, January 2017 (Emission testing method for California Specifications 01350).

See California Department of Public Health's website for certification programs and testing labs. https://www.cdph.ca.gov/Programs/CCDPHP/DEODC/EHLB/IAQ/Pages/VOC.aspx#material

5.504.4.4.2 Carpet adhesive. All carpet adhesive shall meet the requirements of Table 5.504.4.1.

Y	N/A	RESPON. PARTY

5.504.4.5 Composite wood products. Hardwood plywood, particleboard and medium density fiberboard composite wood products used on the interior or exterior of the buildings shall meet the requirements for formaldehyde as specified in ARB's Air Toxics Control Measure (ATCM) for Composite Wood (17 CCR 93120 et seq.). Those materials not exempted under the ATCM must meet the specified emission limits, as shown in Table 5.504.4.5.

5.504.4.5.3 Documentation. Verification of compliance with this section shall be provided as requested by the enforcing agency. Documentation shall include at least one of the following:
1. Product certifications and specifications.
2. Chain of custody certifications.
3. Product labeled and invoiced as meeting the Composite Wood Products regulation (see CCR, Title 17, Section 93120, et seq.).
4. Exterior grade products marked as meeting the PS-1 or PS-2 standards of the Engineered Wood Association, the Australian AS/NZS 2269 or European 636 3S standards.
5. Other methods acceptable to the enforcing agency.

TABLE 5.504.4.5 - FORMALDEHYDE LIMITS[1]

MAXIMUM FORMALDEHYDE EMISSIONS IN PARTS PER MILLION

PRODUCT	CURRENT LIMIT
HARDWOOD PLYWOOD VENEER CORE	0.05
HARDWOOD PLYWOOD COMPOSITE CORE	0.05
PARTICLE BOARD	0.09
MEDIUM DENSITY FIBERBOARD	0.11
THIN MEDIUM DENSITY FIBERBOARD[2]	0.13

1. VALUES IN THIS TABLE ARE DERIVED FROM THOSE SPECIFIED BY THE CALIFORNIA AIR RESOURCES BOARD, AIR TOXICS CONTROL MEASURE FOR COMPOSITE WOOD AS TESTED IN ACCORDANCE WITH ASTM E 1333. FOR ADDITIONAL INFORMATION, SEE CALIFORNIA CODE OF REGULATIONS, TITLE 17, SECTIONS 93120 THROUGH 93120.12.
2. THIN MEDIUM DENSITY FIBERBOARD HAS A MAXIMUM THICKNESS OF 5/16 INCHES (8 MM).

5.504.4.6 Resilient flooring systems. Where resilient flooring is installed, at least 80 percent of floor area receiving resilient flooring shall meet the requirements of the California Department of Public Health,"Standard Method for the Testing and Evaluation of Volatile Organic Chemical Emissions from Indoor Sources Using Environmental Chambers," Version 1.2, January 2017 (Emission testing method for California Specifications 01350)

See California Department of Public Health's website for certification programs and testing labs. https://www.cdph.ca.gov/Programs/CCDPHP/DEODC/EHLB/IAQ/Pages/VOC.aspx#material

5.504.4.6.1 Verification of compliance. Documentation shall be provided verifying that resilient flooring materials meet the pollutant emission limits.

5.504.4.7 Thermal insulation
Comply with the requirements of the California Department of Public Health, "Standard Method of the Testing and Evaluation of Volatile Organic Chemical Emissions from Indoor Sources Using Environmental Chambers, "Version 1.2, January 2017 (Emission testing method for California Specification 01350).
See California Department of Public Health's website for certification programs and testing labs. https://www.cdph.ca.gov/Programs/CCDPHP/DEODC/EHLB/IAQ/Pages/VOC.aspx#material

5.504.4.7.1 Verification of compliance.
Documentation shall be provided verifying that thermal insulation materials meet the pollutant emission limits.

5.504.4.8 Acoustical ceiling and wall panels.
Comply with the requirements of the California Department of Public Health, "Standard Method for the Testing and Evaluation of Volatile Organic Chemical Emissions from Indoor Sources Using Environmental Chambers, " Version 1.2, January 2017 (Emission testing method for California Specification 01350).
See California Department of Public Health's website for certification programs and testing labs.

5.504.4.8.1 Verification of compliance. Documentation shall be provided verifying that acoustical finish materials meet the pollutant emission limits.

5.504.5.3 Filters. In mechanically ventilated buildings, provide regularly occupied areas of the building with air filtration media for outside and return air that provides at least a Minimum Efficiency Reporting Value (MERV) of 13. MERV 13 filters shall be installed prior to occupancy, and recommendations for maintenance with filters of the same value shall be included in the operation and maintenance manual.

Exceptions: Existing mechanical equipment.

5.504.5.3.1 Labeling. Installed filters shall be clearly labeled by the manufacturer indicating the MERV rating.

Y	N/A	RESPON. PARTY

GENERAL NOTES:

1. ALL GENERAL NOTES, SHEET NOTES, AND LEGEND FOUND IN THESE DOCUMENTS SHALL APPLY TYPICALLY THROUGHOUT. IF INCONSISTENCIES ARE FOUND IN THE VARIOUS NOTATIONS, NOTIFY THE ENGINEER IMMEDIATELY IN WRITING REQUESTING CLARIFICATION.

2. THESE PLANS HAVE BEEN CHECKED BY THE SAN MATEO COUNTY AND/OR ITS AUTHORIZED REPRESENTATIVE, BUT SUCH CHECKING AND/OR APPROVAL DOES NOT RELIEVE THE DEVELOPER FROM HIS RESPONSIBILITY TO CORRECT ERRORS, OMISSIONS OR MAKE CHANGES REQUIRED BY CONDITIONS DISCOVERED IN THE FIELD DURING THE COURSE OF CONSTRUCTION.

3. CONTRACTOR SHALL CONFINE HIS OPERATIONS AND ACTIVITIES WITHIN THE PROJECT LIMITS, CONSISTING OF ROAD RIGHT-OF-WAY, RIGHTS OF ENTRY AND/OR PROJECT CONFORMS, AS SHOWN ON THE PLANS AND AS DIRECTED BY THE ENGINEER.

4. CONTINUOUS DUST CONTROL SHALL BE PROVIDED AS DIRECTED BY THE ENGINEER. ALL AREAS UNDERGOING GRADING, AND ALL OTHER CONSTRUCTION ACTIVITIES SHALL BE WATERED, OR OTHER DUST-PALLIATIVE MEASURES USED, TO PREVENT DUST, AS CONDITIONS WARRANT. WATER TRUCKS SHALL BE AVAILABLE AT ALL TIMES.

5. LOCATIONS AND DEPTHS OF EXISTING UTILITIES SHOWN ON THE PLANS ARE APPROXIMATE ONLY. CONTRACTOR SHALL BE RESPONSIBLE FOR CONTACTING THE UTILITIES TO DETERMINE EXACT LOCATIONS AND DEPTHS. CONTRACTOR SHALL CALL USA NORTH 811 (USA) UNDERGROUND SERVICE ALERT A MINIMUM OF FORTY-EIGHT (48) HOURS IN ADVANCE OF ANY EXCAVATION OR TRENCHING WORK. USA MAY BE CONTACTED EITHER ON-LINE AT USANORTH811.ORG OR BY PHONE BY DIALING (800) 227-2600 OR 811. WHEN CALLING, BE PREPARED TO GIVE LOCATION AND NATURE OF WORK, START DATE, COMPANY NAME, ADDRESS AND TELEPHONE NUMBER.

6. EXISTING UTILITIES SHALL NOT BE INTERRUPTED UNTIL THE UTILITY COMPANY HAS PROVIDED ALTERNATIVE SERVICE FACILITIES. THE CONTRACTOR SHALL COOPERATE AND COORDINATE HIS WORK WITH THE APPROPRIATE AGENCIES AND UTILITY COMPANIES.

7. PLANS MAY NOT SHOWN ALL EXISTING WATER, GAS, OR SANITARY SEWER LATERALS. CONTRACTOR SHALL BE RESPONSIBLE FOR VERIFICATION AND PRESERVATION OF ALL SUCH FACILITIES WHICH ARE NOT TO BE RELOCATED.

8. CONTRACTOR IS ADVISED THAT EXCAVATION MAY CONFLICT WITH SANITARY SEWER LATERALS, GAS LINES, WATER LINES AND OTHER UNDERGROUND UTILITIES. ANY DAMAGE TO EXISTING FACILITIES CAUSED BY THE CONTRACTOR SHALL BE REPAIRED AT THE CONTRACTOR'S EXPENSE.

9. DRIVEWAY OPENINGS AND CONFORM LOCATIONS SHOWN ARE APPROXIMATE ONLY. EXACT LOCATIONS WILL BE DETERMINED IN THE FIELD BY THE ENGINEER. SURFACED SHOULDER CONFORM LIMITS AREA AS INDICATED AT 3 FEET FROM OUTSIDE EDGE OF THE GUTTER, UNLESS DIRECTED OTHERWISE BY THE ENGINEER OR OTHERWISE NOTED ON THE PLANS.

10. NO TREES SHALL BE REMOVED UNLESS THEY ARE SHOWN AND NOTED TO BE REMOVED ON THE IMPROVEMENT PLANS. ALL TREES CONFLICTING WITH GRADING, UTILITIES, OR OTHER IMPROVEMENTS, OR OVERHANGING THE SIDEWALK OR PAVEMENT TO FORM A NUISANCE OR HAZARD, SHALL BE TRIMMED AND PROPERLY TREATED AND SEALED. THE DRIP LINE OF TREES TO BE SAVED WILL BE FENCED, AND NO GRADING SHALL TAKE PLACE WITHIN THIS FENCED AREA.

11. THE CONTRACTOR'S ATTENTION IS DIRECTED TO THE STANDARD SPECIFICATIONS. THE SURVEY AND ASSOCIATED STAKING SHALL BE IN CONFORMANCE WITH THE SPECIFICATIONS AND CONSTRUCTION STAKING.

12. WHEN DIRECTED BY THE ENGINEER, CUT AND FILL SLOPE RATIOS SHALL BE VARIED TO AVOID TREES OR OTHER EXISTING IMPROVEMENTS.

13. CONTRACTOR SHALL EXERCISE CARE WHEN EXCAVATING NEAR TREES AND ROOTS OF TREES TO REMAIN. SEE SPECIFICATIONS.

14. ALL REVISIONS TO THIS PLAN MUST BE REVIEWED BY THE COUNTY ENGINEER PRIOR TO CONSTRUCTION AND SHALL BE ACCURATELY SHOWN ON REVISED PLANS STAMPED AND SIGNED BY THE COUNTY PRIOR TO THE INSTALLATION OF THE IMPROVEMENTS.

15. IF A CONFLICT OCCURS BETWEEN THE COUNTY OF SAN MATEO DESIGN AND CONSTRUCTION STANDARDS AND THE RECOMMENDATIONS BY THE DESIGN ENGINEER AND/OR SOILS ENGINEER, THE MORE STRINGENT SHALL APPLY AS DIRECTED BY THE COUNTY ENGINEER.

16. FINAL PAVEMENT WORK SHALL NOT OCCUR WITHIN THE COUNTY RIGHT-OF-WAY PRIOR TO COMPLETION OF UTILITY RELOCATION WITHOUT THE SPECIFIC APPROVAL OF THE COUNTY ENGINEER.

17. ALL UTILITY TRENCHES IN EXISTING ROADWAY SHALL BE BACKFILLED AND OPENED TO PUBLIC TRAFFIC FOR A MINIMUM OF TWO WEEKS PRIOR TO PLACING PERMANENT PAVEMENT.

18. ALL CONSTRUCTION STAKING FOR GRADING, CURB, AND GUTTER, SIDEWALK, SANITARY SEWER, STORM DRAINS, WATER LINES, RECYCLED WATER, FIRE HYDRANTS, ELECTROLIERS, ETC. SHALL BE DONE BY A REGISTERED CIVIL ENGINEER OR A LICENSED LAND SURVEYOR.

19. PRIOR TO RECEIVING/TAKING ANY WATER FROM THE COUNTY OF SAN MATEO WATER SYSTEM THE CONTRACTOR SHALL ACQUIRE A COUNTY WATER METER OR COUNTY FIRE HYDRANT METER. ALL WATER USAGE SHALL BE METERED.

20. ALL LINES ABANDONED DURING CONSTRUCTION SHALL BE REMOVED UNLESS OTHERWISE NOTED ON THE PLANS.

21. PRIOR TO TRENCHING FOR ANY SEWER, WATER, RECYCLED WATER, OR STORM DRAIN PIPE, THE CONTRACTOR SHALL VERIFY, IN THE FIELD, THE SIZE AND THE LOCATION OF THE EXISTING PIPE AT THE POINT OF CONNECTION. ANY DEVIATION FROM THE PLANS SHALL BE RESOLVED BY THE DESIGN ENGINEER PRIOR TO TRENCHING. ANY DAMAGE CAUSED BY TRENCHING TO EXISTING UNDERGROUND UTILITIES SHALL BE THE SOLE RESPONSIBILITY OF THE CONTRACTOR

22. ALL TRENCHES SHALL BE BACKFILLED IN ACCORDANCE WITH COUNTY OF SAN MATEO STANDARD DETAILS. COMPACTION SHALL BE ACHIEVED BY MECHANICAL MEANS. NO FLOODING, PONDING, OR JETTING SHALL BE PERMITTED.

23. TESTING:
   - 23.1. ALL INDEPENDENT LABORATORY INSPECTIONS CALLED FOR BY THE COUNTY ENGINEER WILL BE PAID FOR BY THE DEVELOPER OR CONTRACTOR.
   - 23.2. ROADWAY SUB-GRADE, SUB-BASE, BASE, AND TRENCH BACKFILL COMPACTION TESTING SHALL BE PERFORMED BY A SOILS LAB CONTRACTING WITH THE COUNTY OF SAN MATEO AT THE DEVELOPER'S EXPENSE.
   - 23.3. R-VALUE TESTING OF THE PAVEMENT SUB-GRADE SHALL BE PERFORMED PRIOR TO THE INSTALLATION OF BASE ROCK, OR AS REQUIRED BY THE COUNTY ENGINEER.
   - 23.4. A MINIMUM OF 48 HOURS NOTICE IS REQUIRED TO SCHEDULE ALL SPECIAL INSPECTION/TESTING SERVICES.

24. EXISTING CURB, GUTTER AND SIDEWALKS WITHIN THE PROJECT LIMITS THAT ARE DAMAGED OR DISPLACED, SHALL BE REPAIRED OR REPLACED BY THE CONTRACTOR PER THE COUNTY OF SAN MATEO DESIGN AND CONSTRUCTION STANDARDS.

25. BASIS OF ELEVATION DATUM SHALL BE PROVIDED (IF COUNTY BENCHMARK, GIVE NUMBER, LOCATION AND ELEVATION).

26. BENCHMARKS SHALL BE FURNISHED AND INSTALLED BY THE CONTRACTOR AT LOCATIONS SHOWN. THE DEVELOPER'S ENGINEERS SHALL STAMP THE BENCHMARKS PER STANDARD DETAIL D-10 AND FURNISH THE COUNTY ENGINEER WITH THE BENCHMARK ELEVATION DATA.

27. TRAFFIC CONTROL DEVICES AND INSTALLATIONS SHALL BE IN CONFORMANCE WITH CALIFORNIA MANUAL ON UNIFORM TRAFFIC CONTROL DEVICES, AND MUST MEET THE UDC STANDARDS (IF APPLICABLE).

28. ALL STREET MONUMENTS, LOT CORNER, BENCHMARKS AND OTHER PERMANENT PIPE OR MONUMENTS DISTURBED DURING THE PROCESS OF CONSTRUCTION SHALL BE REPLACED BY A LICENSED CIVIL ENGINEER OR SURVEYOR PRIOR TO ACCEPTANCE OF IMPROVEMENTS BY THE COUNTY.

29. ESCPS MUST BE PREPARED CONSISTENT TO THE COUNTY'S DESIGN AND CONSTRUCTION STANDARDS AND ORDINANCES. SWPPPS MUST BE PREPARED BY A QUALIFIED SWPPP DEVELOPER AND BE COMPLIANT WITH THE STATE'S CONSTRUCTION GENERAL PERMIT. EROSION AND SEDIMENT CONTROL MEASURES MUST BE IN PLACE AT ALL TIMES DURING THE CONSTRUCTION PROJECT UNTIL FINAL SITE STABILIZATION IS ACHIEVED. THE PERSON RESPONSIBLE FOR THE DAILY MAINTENANCE OF THE FACILITIES IS <INSERT NAME> AND CAN BE REACHED 24 HOURS A DAY AT 209-239-6229. THESE FACILITIES SHALL CONTROL AND CONTAIN EROSION-CAUSED SEDIMENT DEPOSITS AND PROVIDE FOR THE SAFE DISCHARGE OF SEDIMENT-FREE STORM WATER INTO EXISTING STORM DRAIN FACILITIES.

30. IF THE PROJECT IS APPLICABLE TO THE STATE'S CONSTRUCTION GENERAL PERMIT, A NOTICE OF INTENT (NOI) TO COMPLY WITH THE NPDES GENERAL PERMIT FOR STORMWATER RUN-OFF ASSOCIATED WITH CONSTRUCTION ACTIVITY SHALL BE SUBMITTED TO THE SWRCB VIA THE STATE'S SMARTS SYSTEM. THE WDID# SHOULD BE INDICATED ON THE PLANS. A STORMWATER POLLUTION PREVENTION PLAN (SWPPP) SHALL BE SUBMITTED FOR APPROVAL BY THE COUNTY ENGINEER.

31. IF, DURING CONSTRUCTION, ARCHAEOLOGICAL REMAINS ARE ENCOUNTERED, CONSTRUCTION IN THE VICINITY SHALL BE HALTED, AN ARCHAEOLOGIST CONSULTED AND THE COUNTY COMMUNITY DEVELOPMENT DEPARTMENT NOTIFIED. IF, IN THE OPINION OF THE ARCHAEOLOGIST, THE REMAINS ARE SIGNIFICANT, MEASURES, AS MAY BE REQUIRED BY THE COMMUNITY DEVELOPMENT DIRECTOR, SHALL BE TAKEN TO PROTECT THEM.

32. WORK SHALL BE RESTRICTED TO WEEKDAYS BETWEEN 8:00 AM TO 5:00 PM AND WEEKENDS BY COUNTY APPROVAL. WORK WHICH REQUIRES ANY TRAFFIC LANE CLOSURES OR RESTRICTING OF THE TRAVELED WAY SHALL BE LIMITED TO 9:00 AM TO 3:30 PM IN THE COMMUTE DIRECTION AND 8:00 AM TO 4:30 PM IN THE NON-COMMUTE DIRECTION.

33. THE OVERTIME COST FOR INSPECTING WORK PERFORMED BEFORE 8:00 AM, AFTER 5:00 PM, WEEKENDS, AND HOLIDAYS, THAT REQUIRE COUNTY INSPECTION, SHALL BE PRE-PAID BY THE CONTRACTOR OR DEVELOPER BEFORE THE WORK IS AUTHORIZED.

34. CONSTRUCTION EQUIPMENT WHICH OPERATES AT A NOISE LEVEL IN EXCESS OF 85 DECIBELS (MEASURED ON THE A-WEIGHTED SCALE DEFINED IN ANSI S-1.4) AT A DISTANCE OF 100 FEET FROM THE EQUIPMENT IS PROHIBITED.

35. THE CONTRACTOR SHALL KEEP EXCAVATIONS FREE FROM WATER DURING CONSTRUCTION. THE STATIC WATER LEVEL SHALL BE DRAWN DOWN A MINIMUM OF 2 FEET BELOW BOTTOM OF EXCAVATIONS TO MAINTAIN AN UNDISTURBED STATE OF NATURAL SOILS AND ALLOW PLACEMENT OF FILL TO THE SPECIFIED DENSITY. DISPOSAL OF WATER SHALL NOT DAMAGE PROPERTY OR CREATE A PUBLIC NUISANCE. CONTRACTOR SHALL DETERMINE METHOD OF DEWATERING AND LOCATION FOR DISCHARGE/DISPOSAL.

36. DISPOSAL OF WATER INTO THE COUNTY SANITARY SEWER SYSTEM IS STRICTLY PROHIBITED.

37. DISPOSAL OF WATER INTO THE EXISTING STORM DRAIN SYSTEM MUST BE APPROVED IN WRITING BY THE COUNTY ENGINEER PRIOR TO DISPOSAL.

38. CONTRACTOR SHALL MAINTAIN ALL STREETS, SIDEWALKS, AND ALL OTHER PUBLIC RIGHT-OF-WAYS IN A CLEAN, SAFE, AND USABLE CONDITION THROUGHOUT THE COURSE OF CONSTRUCTION. ALL SPILLAGE OF SOIL, ROCK, CONSTRUCTION DEBRIS, ETC., SHALL BE REMOVED IMMEDIATELY FROM PUBLICLY OWNED PROPERTY. ALL ADJACENT PROPERTY, PRIVATE OR PUBLIC, SHALL BE MAINTAINED IN A CLEAN, SAFE, AND USABLE CONDITION. THE CONTRACTOR SHALL PROVIDE FOR SAFE, UNOBSTRUCTED ACCESS TO PRIVATE PROPERTY ADJACENT TO WORK THROUGHOUT THE PERIOD OF CONSTRUCTION. CONTRACTOR SHALL PROVIDE TO THE PUBLIC WORKS DEPARTMENT THE NAME AND TELEPHONE NUMBER OF THE RESPONSIBLE PERSON AVAILABLE 24 HOURS A DAY IF ANY PROBLEMS OR CONDITIONS ARE NOT MET.

39. ALL TRASH, CONSTRUCTION DEBRIS AND MATERIALS SHALL BE CONTAINED WITHIN PROPER CONTAINERS AND REMOVED ON A WEEKLY BASIS.

40. THE CONTRACTOR SHALL KEEP ADJOINING PUBLIC STREETS AND PARKING AREAS FREE AND CLEAN OF PROJECT DIRT, MUD, AND MATERIALS DURING THE CONSTRUCTION PERIOD. THE CONTRACTOR SHALL BE RESPONSIBLE FOR CORRECTIVE MEASURES AS DIRECTED BY THE PUBLIC WORKS INSPECTOR AT NO EXPENSE TO THE COUNTY.

41. A BUILDING PERMIT IS REQUIRED FOR CONSTRUCTION OF ALL RETAINING WALLS OVER 4 FEET IN HEIGHT MEASURED FROM THE BOTTOM OF THE FOOTING TO THE TOP OF THE WALL. PRIOR TO ACCEPTANCE OF THE IMPROVEMENTS AS COMPLETE, VERIFICATION THAT BUILDING INSPECTION HAS SIGNED OFF ON THE PERMIT SHALL BE PROVIDED TO THE PUBLIC WORKS INSPECTOR. ALL WOOD IN CONTACT WITH THE GROUND SHALL BE PRESSURE-TREATED, WHETHER A CONSTRUCTION PERMIT IS REQUIRED OR NOT.

42. THE MANNER OF BRACING AND SHORING EXCAVATIONS SHALL BE AS SET FORTH IN THE RULES, ORDERS AND REGULATIONS OF THE STATE OF CALIFORNIA CONSTRUCTION SAFETY ORDERS, DIVISION OF INDUSTRIAL SAFETY.

43. CONTRACTORS MAY BE REQUIRED AT THE DISCRETION OF THE COUNTY ENGINEER TO PROVIDE DRAWINGS OR CALCULATIONS BY A REGISTERED ENGINEER FIVE (5) WORKING DAYS PRIOR TO BEGINNING CONSTRUCTION FOR SPECIALLY DESIGNED BRACING AND SHORING OF AN EXCAVATION WHERE STANDARD PRE-MANUFACTURED BRACING OR SHORING CANNOT BE USED.

44. CONTRACTORS SHALL SUBMIT A COPY OF THEIR CURRENT ANNUAL EXCAVATION PERMIT ISSUED BY THE STATE OF CALIFORNIA DIVISION OF INDUSTRIAL SAFETY (CAL-OSHA) ALONG WITH THE CONTRACTOR'S OWN TRENCH SAFETY PLAN PRIOR TO THE START OF CONSTRUCTION.

45. PRIOR TO ANY WORK BEING PERFORMED, THE CONTRACTOR SHALL ATTEND A PRE-CONSTRUCTION MEETING WITH THE COUNTY OF SAN MATEO. THE CONTRACTOR SHALL PROVIDE THE COUNTY OF SAN MATEO 72 HOURS' NOTICE TO SCHEDULE THE PRE-CONSTRUCTION MEETING. THE CONTRACTOR SHALL ALSO NOTIFY THE BELOW LISTED PROJECT CONTACTS A MINIMUM OF 72 HOURS IN ADVANCE OF SAID MEETING.

STORM DRAIN NOTES:

1. ALL PUBLIC STORM DRAIN LINES SHALL BE CLASS III OR HIGHER CLASS RCP OR POLYPROPYLENE PIPE TYPE "S" UP TO 36 UNLESS OTHERWISE SPECIFIED ON THE PLANS.
   - 1.1. ALL PRE-CAST RCP SHALL BE OF WET CAST TYPE CONSTRUCTION. USE RUBBER GASKETED JOINTS CONFORMING TO THE REQUIREMENTS OF ASTM DESIGNATIONS C-76 AND C-443 AND SECTION 3 OF THE DESIGN AND CONSTRUCTION STANDARDS. ALTERNATIVE PIPE MATERIALS WILL BE EVALUATED ON A CASE-BY-CASE BASIS AND MUST BE PRE-APPROVED.
   - 1.2. ALL POLYPROPYLENE PIPE SHALL BE DUAL WALL, TYPE "S" UP TO 36" MATERIAL FOR 12" – 36" PIPE AND FITTING PRODUCTION SHALL BE AN IMPACT MODIFIED COPOLYMER MEETING THE MATERIAL REQUIREMENTS OF ASTM F2764. FITTINGS SHALL BE BELL-AND-SPIGOT MEETING WATERTIGHT JOINT PERFORMANCE AND SHALL MEET REQUIREMENTS OF ASTM D3212. GASKETED BELL & SPIGOT CONNECTIONS SHALL UTILIZE A SPUN-ON, WELDED OR INTEGRAL BELL AND SPIGOT WITH GASKET MEETING ASTM F477.

2. INSTALLATION: POLYPROPYLENE PIPE SHALL MEET STANDARD DETAIL B-15 FOR STORM DRAIN FLEXIBLE PIPE. FITTINGS SHALL BE LAID TO FORM A CLOSED CONCENTRIC JOINT WITH ADJOINING PIPE TO AVOID SUDDEN OFFSETS OF THE FLOW LINE. PIPE SECTIONS SHALL BE JOINED IN A WAY THAT THEY MEET OR EXCEED PERFORMANCE STANDARDS FOUND IN ASTM F2764.

3. BACKFILL AND COMPACTION: FOLLOW STANDARD PLAN B-15 AND B-16 FOR FLEXIBLE PIPE FOR STORM DRAINAGE APPLICATIONS. APPROPRIATE COMPACTION METHODS SHALL BE UTILIZED IN ORDER TO UNIFORMLY COMPACT BACKFILL TO SPECIFIED DENSITIES. INAPPROPRIATE OR EXCESSIVE COMPACTION MAY DAMAGE THE PIPE AND DISTURB LINE AND GRADE. EACH LAYER SHALL BE UNIFORMLY COMPACTED WITH MECHANICAL MEANS AND GUIDELINES FOR FLEXIBLE PIPE. BEDDING, SHADING AND HAUNCH FOR FLEXIBLE PIPE SHALL BE 3/8 X DUST OR ALTERNATIVE APPROVED BY SENIOR CONSTRUCTION MANAGER.

4. STORAGE AND HANDLING: STORE PIPES AND FITTINGS IN A WAY THAT PROTECTS GASKETS FROM WEATHER. PROTECT THE BELL END OF PIPES FROM DAMAGE. IF STACKED, TAKE MEASURES TO ENSURE LOWER PIPES ARE NOT DAMAGED FROM EXCESSIVE WEIGHT. COVER PIPES TO PROVIDE TEMPORARY SUN BLOCK, DO NOT STORE GASKETS NEAR ELECTRICAL OR EXHAUST HEAT SOURCES.

5. THE COUNTY WILL REJECT PIPES WITH CRACKS OR SPLITS GASKETS.

6. ALL STORM DRAIN INLETS SHALL BE LABELED "NO DUMPING – FLOWS TO RIVER" USING AN APPROVED METHOD.

7. STORM DRAIN CONSTRUCTION, MATERIALS AND WORKMANSHIP SHALL BE IN ACCORDANCE WITH THE COUNTY OF SAN MATEO DESIGN AND CONSTRUCTION STANDARDS.

8. THE CONTRACTOR IS TO BE RESPONSIBLE FOR ALL TESTING OF STORM DRAIN FACILITIES. CONTRACTOR SHALL CLEAN, FLUSH AND PROVIDE VIDEO INSPECTION OF ALL STORM DRAIN LINES TO THE SATISFACTION OF THE PUBLIC WORKS INSPECTOR.

STREET NOTES:

1. PRIOR TO PLACING CURB AND GUTTER, SIDEWALK, ASPHALT CONCRETE, SUBBASE, OR BASE MATERIAL, ALL UNDERGROUND FACILITIES WITHIN THE RIGHT-OF-WAY SHALL BE INSTALLED, BACKFILL COMPLETED, AND THE PUBLIC WORKS DEPARTMENT CONSTRUCTION INSPECTION DIVISION NOTIFIED THAT THE UTILITY INSTALLATION HAS SATISFACTORILY PASSED ACCEPTANCE TESTS BY EACH OF THE UTILITY COMPANIES HAVING FACILITIES WITHIN THE WORK AREAS.

2. WHEN WIDENING THE PAVEMENT ON AN EXISTING ROAD, THE EXISTING PAVEMENT SHALL BE SAW CUT TO A NEAT LINE, NOT LOCATED IN THE WHEEL PATH OF VEHICLE TRAFFIC, AND REMOVED BACK TO AN EXISTING SOUND STRUCTURAL SECTION AS DETERMINED BY THE COUNTY ENGINEER. AN EXPLORATORY TRENCH, OR POTHOLING, MAY BE REQUIRED TO DETERMINE THE LIMITS OF PAVEMENT REMOVAL.

3. STREET STRIPING SHALL INCLUDE STOP BARS, CENTERLINE STRIPING OR MARKERS, CROSSWALKS AND ALL OTHER MARKINGS REQUIRED BY THE COUNTY ENGINEER. ALL STRIPING SHALL BE DONE WITH THERMOPLASTIC AND REFLECTIVE MARKERS. ALL STRIPING SHALL BE CAT-TRACKED PRIOR TO FINAL INSTALLATION. FINAL INSTALLATION OF STRIPING WILL BE ALLOWED ONLY AFTER APPROVAL OF THE STRIPING LAYOUT BY THE CONSTRUCTION INSPECTOR.

4. THE THICKNESS OF SUBBASE, BASE, AND SURFACING SHALL BE AS APPROVED ON THESE PLANS.

5. FOG SEAL OF ASPHALTIC CONCRETE. THE TYPE OF FOG SEAL USED SHALL BE PER SECTION 37 OF CALTRANS STANDARD SPECIFICATIONS LATEST EDITION AND APPROVED BY THE COUNTY OF SAN MATEO PRIOR TO USE.

6. ALL MANHOLE RIMS, LAMPHOLES, VALVES, AND MONUMENT BOXES, ETC. SHALL BE ADJUSTED TO FINISH GRADE AFTER STREET PAVING BY THE UNDERGROUND CONTRACTOR AFTER THE FINAL PAVING COURSE IS PLACED, UNLESS OTHERWISE NOTED. COST FOR THIS WORK SHALL BE INCLUDED IN THE UNIT PRICES FOR MANHOLES.

7. THE CONTRACTOR SHALL PROTECT ALL EXISTING MONUMENTS AND HAVE THE ENGINEER/LAND SURVEYOR TIE OUT BEFORE THE SETTING OF ALL NEW MONUMENTS. ALL SURVEY MONUMENT WELLS SHALL BE FURNISHED AND INSTALLED BY THE CONTRACTOR AT LOCATIONS SHOWN. DEVELOPER'S ENGINEER/LAND SURVEYOR SHALL SET AND STAMP ALL MONUMENTS AND FURNISH THE COUNTY ENGINEER WITH A COPY OF A TIE PLAT FOR EACH MONUMENT.

8. THE CONTRACTOR SHALL BE RESPONSIBLE FOR THE PROTECTION OF ALL EXISTING MONUMENTS AND/OR OTHER SURVEY MONUMENTS AND SHALL NOTIFY THE COUNTY ENGINEER OF ANY DAMAGED OR REMOVED CITY, COUNTY, STATE OR FEDERAL MONUMENTS.

9. UTILITY BOXES SET IN PAVED STREETS SHALL HAVE H-20 TRAFFIC RATING LIDS.

SANITARY SEWER NOTES:

1. SANITARY SEWER CONSTRUCTION, MATERIALS AND WORKMANSHIP SHALL BE IN ACCORDANCE WITH SAN MATEO COUNTY SEWER AND SANITATION DISTRICT STANDARDS AND SPECIFICATIONS AND THE STANDARD DETAILS.

2. SEWER SERVICE LATERALS SHALL BE 4-INCHES MINIMUM INSIDE DIAMETER.

3. ALL SANITARY SEWER MAINS BEING CONSTRUCTED SHALL PASS A LOW PRESSURE AIR TEST IN CONFORMANCE WITH SECTION C, SAN MATEO COUNTY SEWER AND SANITATION DISTRICTS STANDARD SPECIFICATIONS, OF THE SAN MATEO PUBLIC WORKS STANDARD DRAWINGS FOR IMPROVEMENTS, FLUSHED WITH AN APPROVED SEWER BALL, MANDREL TESTED AND TELEVISION INSPECTED (TAPES OR OTHER APPROVED MEDIA SHALL BE GIVEN TO THE COUNTY ENGINEER) PRIOR TO ACCEPTANCE BY THE COUNTY. ALL TESTING SHALL BE PERFORMED AFTER THE COMPACTION FOR STREET BASE ROCK AND PRIOR TO PAVING.

4. PRIOR TO ANY WORK ON THE SANITARY SEWER LINES, A QUALITY CONTROL PLAN SHALL BE APPROVED IN WRITING BY THE COUNTY ENGINEER. THE PLAN MAY INCLUDE SPECIAL TESTING BY AN INDEPENDENT LABORATORY AND CONTINUOUS INSPECTION OF THE SEWER PIPE CONSTRUCTION.

5. ALL SANITARY SEWER MANHOLES SHALL BE VACUUM TESTED PRIOR TO BACKFILL PER ASTM C-1244.

WATER NOTES:

1. WATER LINES SHALL BE LOCATED A MINIMUM OF 10 FEET HORIZONTALLY FROM SEWER MAINS. CROSSING SHALL MEET STATE HEALTH STANDARDS. SEWER LINE NEEDS TO BE ONE (1) FOOT BELOW WATER LINE.

2. THE CONTRACTOR IS TO BE RESPONSIBLE FOR ALL TESTING AND DISINFECTING OF WATER LINES IN CONFORMANCE WITH THE REQUIREMENTS OF THE COUNTY OF SAN MATEO PRIOR TO FINAL ACCEPTANCE. ALL WATER LINES SHALL BE PRESSURE-TESTED, DISINFECTED, FLUSHED, AND TESTED FOR BACTERIA PRIOR TO FINAL ACCEPTANCE BY THE COUNTY. THE MAXIMUM LENGTH OF PIPELINE TO BE TESTED AT A TIME SHALL BE LIMITED TO 5,000 FEET. ALL NEW VALVES SHALL BE EXERCISED DURING THE PRESSURE TEST.

3. ACTUAL CONNECTIONS TO EXISTING COUNTY OF SAN MATEO WATER LINES WILL NOT BE PERMITTED PRIOR TO COMPLETION OF STERILIZATION AND TESTING OF THE WATER MAINS. ALL EXISTING WATER VALVES ARE TO BE OPERATED UNDER THE DIRECTION OF AUTHORIZED COUNTY OF SAN MATEO PERSONNEL ONLY. WATER SERVICES SHALL BE AS PER SAN MATEO COUNTY WATER STANDARDS.

4. ALL CONSTRUCTION WATER SHALL BE PURCHASED FROM THE COUNTY OF SAN MATEO AND SHALL BE METERED BY USE OF A COUNTY HYDRANT METER.

5. ALL DEAD ENDS, CAPPED OR FLANGED, INCLUDING FUTURE SERVICE STUBS, TEES, ELBOW BENDS AND BLOW-OFFS, TEMPORARY OR PERMANENT, SHALL HAVE THRUST BLOCKS INSTALLED AS PER SAN MATEO COUNTY WATER STANDARDS, AND PER STANDARD DETAILS FOR WATER, OTHERWISE MEGALUG□ JOINT RESTRAINTS MUST BE PROVIDED.

6. FIRE HYDRANTS TEES ARE TO BE PLACED AT LOCATIONS APPROVED BY THE FIRE DISTRICT OR AS SHOWN ON THE PLANS.

7. FLANGE JOINTS ARE REQUIRED WHEN INSTALLING FOUR INCH (4") AND LARGER LINE VALVES IN STEEL PIPE. NO OTHER TYPE OF JOINT SHALL BE USED WITHOUT SPECIFIC APPROVAL OF THE COUNTY ENGINEER.

8. ALL CONNECTIONS AND SERVICE TAPS TO EXISTING SAN MATEO COUNTY MAINS SHALL BE MADE WITHOUT DEPRESSURIZING THE MAIN, UNLESS PRIOR APPROVAL IS GIVEN BY THE COUNTY ENGINEER.

9. FIRE HYDRANTS SHALL BE FURNISHED AND INSTALLED BY THE CONTRACTOR IN ACCORDANCE WITH THE SAN MATEO COUNTY WATER STANDARDS AND STANDARD DETAILS FOR WATER.

10. ALL NUT/BOLT KITS TO BE INSTALLED BELOW GRADE SHALL BE 316 GRADE STAINLESS STEEL.

11. ALL HYDRANTS SHALL BE NUMBERED ON THE PLANS USING NOMENCLATURE APPROVED BY THE PUBLIC WORKS DIRECTOR.

SPECIAL NOTES:

1. EXISTING STREETS THAT REQUIRE RECONSTRUCTION AS A RESULT OF THE CONSTRUCTION TRAFFIC SHALL REMAIN OPEN AT ALL TIMES WITH ADEQUATE DETOURS DURING RECONSTRUCTION. RECONSTRUCTION OF EXISTING STREETS SHALL INCLUDE UPGRADING THE AFFECTED PAVEMENT AREA TO MEET ORIGINAL STANDARDS TO PROVIDE A SOUND STRUCTURAL SECTION. THE COUNTY ENGINEER SHALL APPROVE ALL IMPROVEMENTS.

2. ANY DAMAGE, AS A RESULT OF THE CONTRACTOR'S OPERATION, TO PAVEMENT AND BASE MATERIAL THAT IS TO REMAIN SHALL BE REPAIRED, OR REMOVED AND REPLACED WITH THE SAME TYPE OF MATERIAL OR APPROVED EQUAL, AS DIRECTED BY THE ENGINEER, AND AT THE SOLE EXPENSE OF THE CONTRACTOR. THE ENGINEER SHALL BE THE SOLE JUDGE OF THE ADEQUACY OF THE COMPLETED REMEDIAL WORK.

3. DEVELOPER/CONTRACTORS WORK SHALL BE IN ACCORDANCE WITH THE SMAPCD GUIDELINES, INCLUDED SMAPCD REGULATION VIII AND IMPLEMENT CONTROL MEASURES BASED ON SMAPCD COMPLIANCE ASSISTANCE BULLETIN FOR SHORT TERM IMPACTS, SMAPCD SHALL BE CONTACTED TO DISCUSS MITIGATION MEASURES AND IMPLEMENT MEASURES FROM TABLE 6-4 OF THE GUIDE FOR ASSESSING AND MITIGATION AIR QUALITY IMPACTS.

4. ALL PRESSURIZED PLASTIC PIPES SHALL HAVE TRACE WIRES.

5. DEWATERING PLANS FOR ALL TRENCHES SHALL BE SUBMITTED FOR APPROVAL BY THE COUNTY ENGINEER.

6. ALL IRRIGATION SYSTEMS WITH THE COUNTY'S RIGHT-OF-WAYS OR PARKS SHALL BE DESIGNED USING "CALSENSE" CONTROLLERS AS APPROVED BY THE COUNTY ENGINEER.

7. ALL DUCTILE IRON PIPE AND FITTINGS SHALL BE WRAPPED IN POLYWRAP.

ABBREVIATIONS:

AB	AGGREGATE BASE
AC	ASPHALT CONCRETE
ACO	ACO DRAIN SYSTEM
APN	ASSESSOR PARCEL NUMBER
ASTM	AMERICAN SOCIETY FOR TESTING AND MATERIALS
BMP	BEST MANAGEMENT PRACTICE
BOT	BOTTOM
C / CONC	CONCRETE
CB	CATCH BASIN
CBC	CALIFORNIA BUILDING CODE
CLR	CLEAR
CO	CLEANOUT
CW	COLD WATER
DIA	DIAMETER
DMA	DRAINAGE MANAGEMENT AREA
EP	EDGE OF PAVEMENT
EX / (E)	EXISTING
FD	FRENCH DRAIN
FH	FIRE HYDRANT
FL	FLOWLINE
FS	FINISHED SURFACE
FT	FEET
FW	FIRE WATER
G	GROUND / GAS
GB	GRADE BREAK
HDPE	HIGH DENSITY POLYETHYLENE
HWL	HIGH WATER LEVEL
IMP	IMPERVIOUS
INV	INVERT
LF	LINEAR FEET
LIP	LIP OF GUTTER
MA	MATCH
MAX	MAXIMUM
MH	MANHOLE
MIN	MINIMUM
MWSD	MONTARA WATER AND SANITARY DISTRICT
NOI	NOTICE OF INTENT
NPDES	NATIONAL POLLUTANT DISCHARGE ELIMINATION SYSTEM
NTS	NOT TO SCALE
OC	ON CENTER
P	PAVEMENT
PCC	PORTLAND CEMENT CONCRETE
PERF	PERFORATED
PL	PROPERTY LINE
PR	PROPOSED
POC	POINT OF CONNECTION
PVC	POLYVINYL CHLORIDE / POINT OF VERTICAL CURVE
PVT	POINT OF VERTICAL TANGENCY
R	RADIUS
RCP	REINFORCED CONCRETE PIPE
RDL	ROOF DRAIN LEADER
ROW	RIGHT OF WAY
S	SLOPE
SD	STORM DRAIN
SDCB	STORM DRAIN CATCH BASIN
SDMH	STORM DRAIN MANHOLE
SF	SQUARE FEET
SMC	SAN MATEO COUNTY
SS	SANITARY SEWER
SSCO	SANITARY SEWER CLEANOUT
SSMH	SANITARY SEWER MANHOLE
STD	STANDARD
SWPPP	STORMWATER POLLUTION PREVENTION PLA

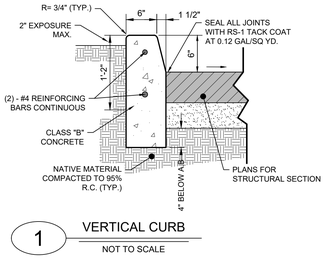

1 VERTICAL CURB

NOT TO SCALE

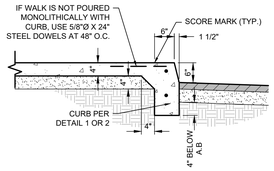

2 CURB & SIDEWALK

NOT TO SCALE

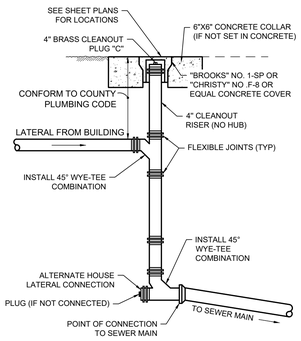

4 CLEAN-OUT

NOT TO SCALE

NOTES:
1. PRECAST CONCRETE M.H. UNITS SHALL CONFORM TO A.S.T.M. C-478.
2. PIPE JOINT SHALL BE WITHIN 6 INCHES OF OUTER WALLS OF MANHOLE.
3. MANHOLE BASE TO BE TROWELED SMOOTH INSIDE.
3. SHORT CONE TO BE USED ONLY WHEN MANHOLE DEPTH JUSTIFIES.
5. COLLAR SHALL BE CLASS "B" CONCRETE AND CONSTRUCTED 2 1/2 INCHES BELOW FINISHED GRADE.

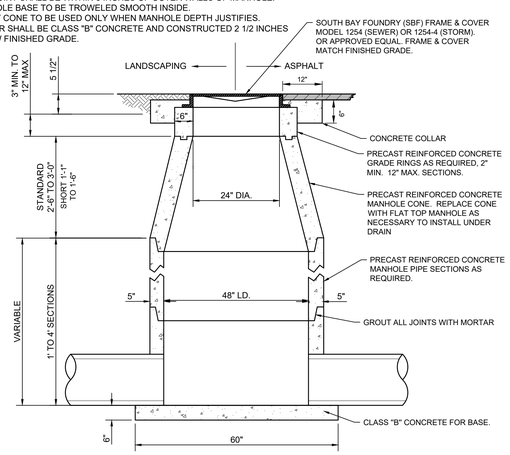

3 MAINTENANCE HOLE

NOT TO SCALE

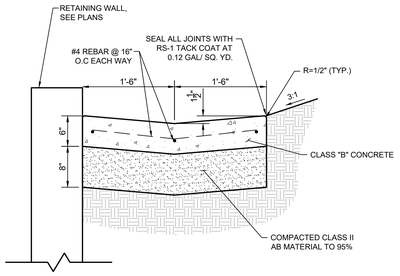

5 VALLEY GUTTER @ TOP OF WALL

NOT TO SCALE

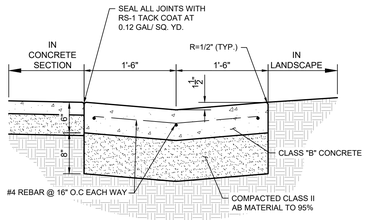

7 VALLEY GUTTER (ONSITE)

NOT TO SCALE

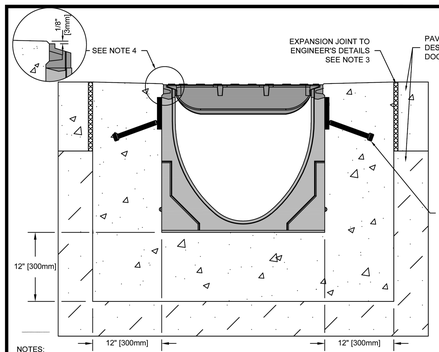

NOTES:
1. IT IS NECESSARY TO ENSURE MINIMUM DIMENSIONS SHOWN ARE SUITABLE FOR EXISTING GROUND CONDITIONS. *ENGINEERING ADVICE MAY BE REQUIRED.*
2. MINIMUM CONCRETE STRENGTH OF 4,000 PSI IS RECOMMENDED. CONCRETE SHOULD BE VIBRATED TO ELIMINATE AIR POCKETS.
3. EXPANSION AND CONTRACTION CONTROL JOINTS AND REINFORCEMENT ARE RECOMMENDED TO PROTECT CHANNEL AND CONCRETE SURROUND. *ENGINEERING ADVICE MAY BE REQUIRED.*
4. THE FINISHED LEVEL OF THE CONCRETE SURROUND MUST BE APPROX. 1/8" [3mm] ABOVE THE TOP OF THE CHANNEL EDGE.
5. CONCRETE BASE THICKNESS SHOULD MATCH SLAB THICKNESS. ENGINEERING ADVICE MAY BE REQUIRED TO DETERMINE PROPER LOAD CLASS.
6. REFER TO ACO'S LATEST INSTALLATION INSTRUCTIONS FOR FURTHER DETAILS.
7. ACO, INC. RECOMMENDS USING THE POWERDRAIN CONCRETE ANCHORS (PART #97496) FOR LOAD CLASS F APPLICATIONS. TWO ANCHORS REQUIRED PER HALF METER LENGTH.

SPECIFICATION CLAUSE

S300K POWERDRAIN - LOAD CLASS F

GENERAL
THE SURFACE DRAINAGE SYSTEM SHALL BE POLYMER CONCRETE S300K CHANNEL SYSTEM WITH DUCTILE IRON EDGE RAILS AS MANUFACTURED BY ACO, INC.

MATERIALS
CHANNELS SHALL BE MANUFACTURED FROM POLYESTER RESIN POLYMER CONCRETE WITH AN INTEGRALLY CAST-IN DUCTILE IRON EDGE RAIL. MINIMUM PROPERTIES OF POLYMER CONCRETE WILL BE AS FOLLOWS:

COMPRESSIVE STRENGTH:	14,000 PSI
FLEXURAL STRENGTH:	4,000 PSI
TENSILE STRENGTH:	1,500 PSI
WATER ABSORPTION:	0.07%
FROST PROOF	YES
DILUTE ACID AND ALKALI RESISTANT	YES
B117 SALT SPRAY TEST COMPLIANT	YES

THE SYSTEM SHALL BE 12" (300mm) NOMINAL INTERNAL WIDTH WITH A 14.2" (390mm) OVERALL WIDTH AND A BUILT-IN SLOPE OF 0.5%. CHANNEL INVERT SHALL HAVE DEVELOPED "V" SHAPE. ALL CHANNELS SHALL BE INTERLOCKING WITH A MALE/FEMALE JOINT.

THE COMPLETE DRAINAGE SYSTEM SHALL BE BY ACO, INC. ANY DEVIATION OR PARTIAL SYSTEM DESIGN AND/OR IMPROPER INSTALLATION WILL VOID ANY AND ALL WARRANTIES PROVIDED BY ACO, INC.

CHANNEL SHALL WITHSTAND LOADING TO PROPER LOAD CLASS AS OUTLINED BY EN 1433. GRATE TYPE SHALL BE APPROPRIATE TO MEET THE SYSTEM LOAD CLASS SPECIFIED AND INTENDED APPLICATION. GRATES SHALL BE SECURED USING EITHER THE 'POWERLOK' BOLTLESS LOCKING SYSTEM OR THE 4 BOLT LOCKING OPTION. CHANNEL AND GRATE SHALL BE CERTIFIED TO MEET THE SPECIFIED EN 1433 LOAD CLASS. THE SYSTEM SHALL BE INSTALLED IN ACCORDANCE WITH THE MANUFACTURER'S INSTRUCTIONS AND RECOMMENDATIONS.

SK3-F-ECP
DATE: 12/12/16

POWERDRAIN - S300K - LOAD CLASS: F
W/ OPTIONAL CONCRETE ANCHORS
Exposed Concrete Pavement

INSTALLATION DRAWING - ACO DRAIN

ACO, Inc.

625 W. Beechcraft St Casa Grande, AZ 85122 Tel: 520-421-9988 Fax: 520-421-9899	9470 Pinecone Dr Mentor, OH 44060 Tel: 440-639-7230 Fax: 440-639-7235	4211 Pleasant Rd. Fort Mill, SC 29708 Tel: 440-639-7230 Fax: 803-802-1063

Arizona Tel: 888-490-9552 e-mail: sales@acousa.com Ohio Tel: 800-543-4764 www.acousa.com South Carolina Tel: 800-543-4764

NOTE: GRATE TYPE SHALL BE THE 4-BOLT DUCTILE IRON GRATE WITH LOAD CLASS F TO WITHSTAND HEAVY DUTY TRAFFIC.

6 ACO POWER DRAIN - S300K

NOT TO SCALE

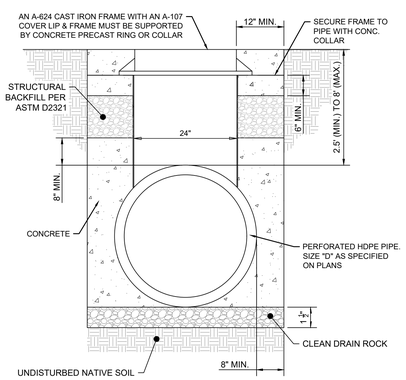

SD1 24" RISER TEE DETAIL

NOT TO SCALE

COUNTY OF SAN MATEO DEPARTMENT OF PUBLIC WORKS
REDWOOD CITY CALIFORNIA

DRAWN BY: A.Z.
CHECKED BY: K.L.
APPROVED BY: A.M.S.
SCALE: NONE
DATE: 2-2022
REVISED: 2-2022

TABLE A			
Curb Type	Normal Curb Height	Curb Batter	b
A1-6	6"	1 1/2"	12 1/2"
A1-8	8"	2"	12
B	6"	4"	10
Dike	6"	3"	11

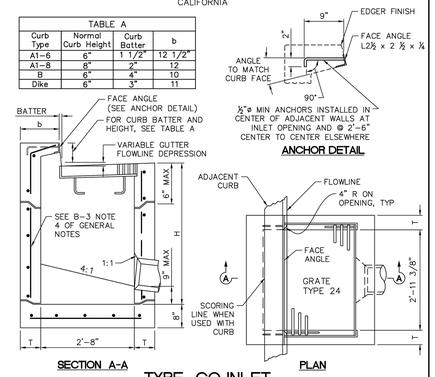

SECTION A-A PLAN

TYPE GO INLET

TABLE B. CATCH BASIN QUANTITY				
	H=3'-0" TO 8'-0" (T=6")		H=8'-1" TO 20'-0" (T=8")	
	H=3'-0" (CY)	ADDITIONAL PCC PER FT (CY)	H=8'-1" (CY)	ADDITIONAL PCC PER FT (CY)
GO	1.26	0.245	4.90	0.506

TABLE B BASED ON 8" FLOOR SLAB, NO DEDUCTION FOR PIPE OPENINGS, AND CURB TYPE GIVING HIGHEST QUANTITY OF CONCRETE. NO DEDUCTIONS OR ADJUSTMENTS ARE TO BE MADE TO THESE QUANTITIES BECAUSE OF PIPE OPENINGS, DIFFERENT FLOOR ALTERNATIVES OR DIFFERENT CURB TYPE.

B-1

COUNTY OF SAN MATEO DEPARTMENT OF PUBLIC WORKS
REDWOOD CITY CALIFORNIA

DRAWN BY: A.Z.
CHECKED BY: K.L.
APPROVED BY: A.M.S.
SCALE: NONE
DATE: 2-2022
REVISED: 2-2022

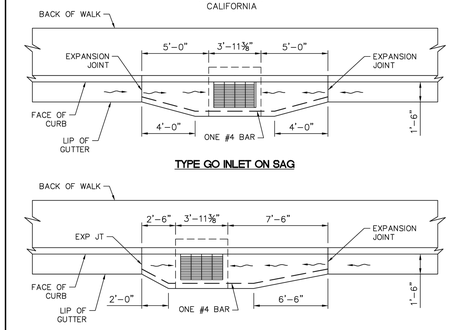

QUANTITY OF PCC FOR APRONS (CUBIC YARD)		
INLET	ON GRADE	IN SAG
GO	0.3843	0.3880

NOTE:
1. EXPANSION JOINT FILLER MUST COMPLY WITH ASTM D1751. NO FOAM OR OTHER MATERIALS. FILLER MUST BE ¼" TO ½" MAX THICKNESS.

APRON DETAILS

B-1A

B-1 TYPE GO INLET & APRON DETAILS

NOT TO SCALE

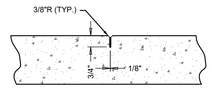

NOTES:
1. MAX SPACING OF WEAKENED PLANE JOINTS ARE 10 FEET SQUARE OR AS SHOWN ON PLANS.

J1 WEAKENDED PLANE JOINT

NOT TO SCALE

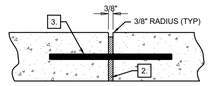

NOTES:
1. CONSTRUCT EXPANSION JOINTS PER AGENCY REQUIREMENTS AT BEGINNING & ENDS OF CURBS, EACH SIDE OF CATCH BASINS, AND OTHER FIXED OBJECTS.
2. PREFORMED FIBER EXPANSION JOINT FILLER CONFORMING TO ASTM D-1751.
3. #4 X 24" STEEL DOWELS TO BE USED AT ALL UNREINFORCED CURB EXPANSION JOINTS. REINFORCED CURB SHALL BE CONTACT LAP SPLICED LENGTH OF (50 X BAR DIAMETER).
4. MAXIMUM SPACING OF EXPANSION JOINTS ARE 80 FEET FOR CURBS AND 100 FEET SQUARE FOR FLATWORK, OR AS SHOWN ON PLANS

J2 CONCRETE CURB EXPANSION JOINT

NOT TO SCALE

COUNTY OF SAN MATEO DEPARTMENT OF PUBLIC WORKS
REDWOOD CITY CALIFORNIA

DRAWN BY: A.Z.
CHECKED BY: K.L.
APPROVED BY: A.M.S.
SCALE: NONE
DATE: 2-2022
REVISED: 2-2022

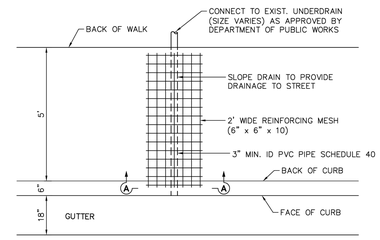

PLAN

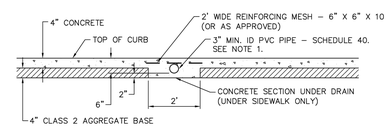

SECTION A-A

NOTE:
1. EDGE OF PIPES SHALL HAVE A 6" MIN. CLEARANCE FOR MULTIPLE PIPES.

DRAINAGE UNDER SIDEWALK

D-6

D-6 DRAINAGE UNDER SIDEWALK

NOT TO SCALE

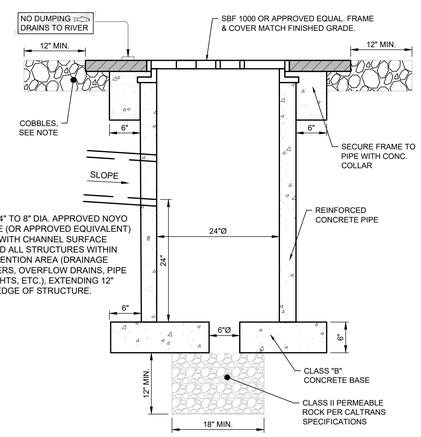

NOTE:
PLACE 4" TO 8" DIA. APPROVED NOYO COBBLE (OR APPROVED EQUIVALENT) FLUSH WITH CHANNEL SURFACE AROUND ALL STRUCTURES WITHIN BIORETENTION AREA (DRAINAGE BUBBLERS, OVERFLOW DRAINS, PIPE DAYLIGHTS, ETC.), EXTENDING 12" FROM EDGE OF STRUCTURE.

SD2 24"Ø STORM DRAIN BUBBLE UP STRUCTURE

NOT TO SCALE

Not for permitting or construction

PBK

ARCHITECT PBK Architects, Inc.
PBK.com
SAN LUIS OBISPO
1327 Archer Street, Suite 110
San Luis Obispo, CA 93401
805-529-3076

FIRE STATION #44
COASTSIDE FIRE PROTECTION DISTRICT
501 STETSON STREET
MOSS BEACH, CA 94038
BID SET

BID SET

KEY PLAN
PLAN NORTH
TRUE NORTH

REGISTERED PROFESSIONAL ENGINEER
MARSHALL T. SWIFT
No. C047437
CIVIL
STATE OF CALIFORNIA

CLIENT
COASTSIDE FIRE PROTECTION DISTRICT
PROJECT NUMBER
230137
DATE 9/17/2026
DRAWN BY: BS CHKED BY: MS

REVISIONS

#	DESCRIPTION	DATE

CONSTRUCTION DETAILS

This document is for plan review only

C1.1

REVISIONS				
ZONE	REV	DESCRIPTION	DATE	APPROVED
	1	REVISION 1	MAY 2011	TY
	2	REVISION 2	OCT 2011	TY
	3	REVISION 3	MAR 2018	TY

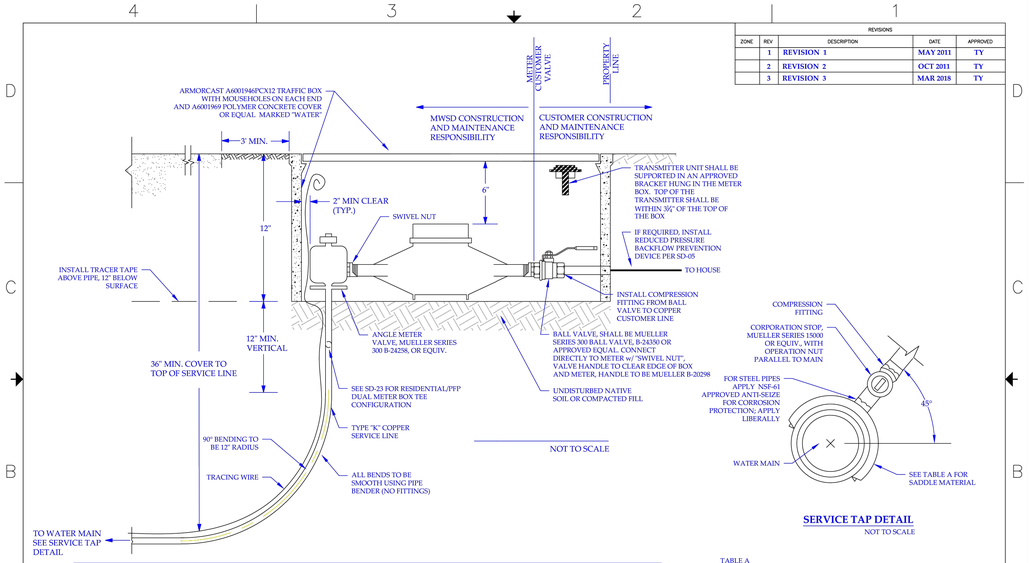

SERVICE TAP DETAIL

NOT TO SCALE

TABLE A

PIPE MATERIAL	SADDLE MATERIAL	MODEL
STEEL	BRONZE	ROMAC 202 BS OR APPROVED EQUIVALENT
AC, PVC, DI, CI	BRONZE	MUELLER BR2S & BR2W SERIES OR APPROVED EQUIVALENT

NOTES:

1. ⅝"x¾" SERVICES: MWSD WILL SUPPLY AND INSTALL BADGER METER MODEL 25, RTR REGISTERED WITH PRE-WIRED ORION TRANSMITTER WITH PROFILE READING, READ IN CU-FT
2. ¾"x¾" SERVICES: MWSD WILL SUPPLY AND INSTALL BADGER METER MODEL 35, RTR REGISTERED WITH PRE-WIRED ORION TRANSMITTER WITH PROFILE READING, READ IN CU-FT
3. 1" SERVICES: MWSD WILL SUPPLY AND INSTALL BADGER METER MODEL 70, RTR REGISTERED WITH PRE-WIRED ORION TRANSMITTER WITH PROFILE READING, READ IN CU-FT
5. ALL PIPING SHALL BE TYPE "K" COPPER
6. ALL FITTINGS AND VALVES SHALL BE BRONZE, AND SHALL BE CONNECTED USING COMPRESSION FITTINGS
7. BRONZE THREADED BUSHINGS SHALL BE USED FOR A REDUCERS

MONTARA WATER AND SANITARY DISTRICT

⅝" TO 1" METERED SERVICE INSTALLATION (FOR DOMESTIC SERVICE CONNECTION ONLY)

SIZE | FSCM NO. | DWG NO. SD-01 | REV

SCALE NONE | DATE: DEC 2006 | SHEET

REVISIONS				
ZONE	REV	DESCRIPTION	DATE	APPROVED
	1	REVISION 1	MAY 2011	TY
	2	REVISION 2	OCT 2011	TY
	3	REVISION 3	MAR 2018	TY

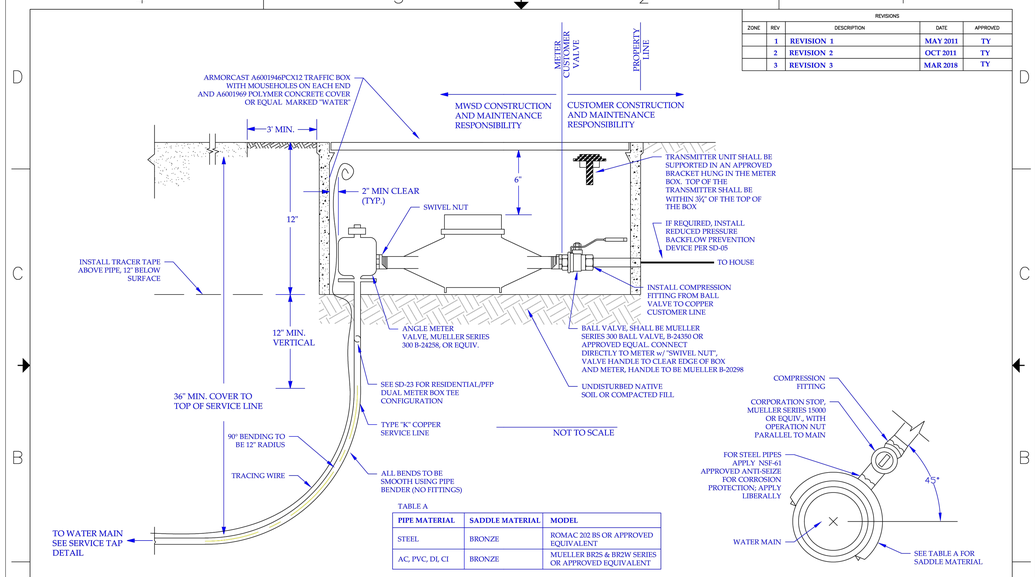

TABLE A

PIPE MATERIAL	SADDLE MATERIAL	MODEL
STEEL	BRONZE	ROMAC 202 BS OR APPROVED EQUIVALENT
AC, PVC, DI, CI	BRONZE	MUELLER BR2S & BR2W SERIES OR APPROVED EQUIVALENT

SERVICE TAP DETAIL

NOT TO SCALE

NOTES:

1. 1-½" SERVICES: MWSD WILL SUPPLY AND INSTALL BADGER METER MODEL 120, RTR REGISTERED, PRE-WIRED ORION TRANSMITTER WITH PROFILE READING, READ IN CU-FT.
2. 2" SERVICES: MWSD WILL SUPPLY AND INSTALL BADGER METER MODEL 170, RTR REGISTERED, PRE-WIRED ORION TRANSMITTER WITH PROFILE READING, READ IN CU-FT.
3. ALL PIPING SHALL BE TYPE "K" COPPER.
4. ALL FITTINGS AND VALVES SHALL BE BRONZE, AND SHALL BE CONNECTED USING COMPRESSION FITTINGS.
5. BRONZE THREADED BUSHINGS SHALL BE USED FOR A REDUCERS.

MONTARA WATER AND SANITARY DISTRICT

1-½" & 2" METERED SERVICE INSTALLATION (FOR DOMESTIC SERVICE CONNECTION ONLY)

SIZE | FSCM NO. | DWG NO. SD-02 | REV

SCALE NONE | DATE: DEC 2006 | SHEET

REVISIONS				
ZONE	REV	DESCRIPTION	DATE	APPROVED
	1	REVISION 1	MAY 2011	TY
	2	REVISION 2	OCT 2011	TY
	3	REVISION 3	MAR 2018	TY

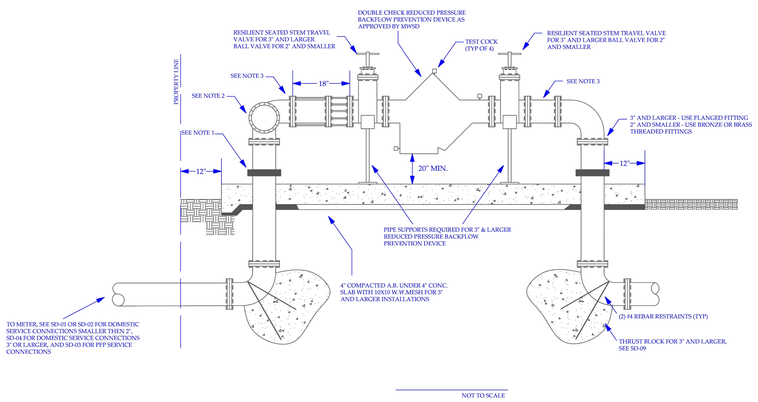

NOT TO SCALE

NOTES

1. FOR 2" AND SMALLER, INSTALL UNION JOINTS ON BRASS RISER PIPE.
2. INSTALL 90° ELBOW FOR SINGLE PURPOSE BACKFLOW PREVENTION DEVICE INSTALLATION AND INSTALL TEE FOR DUAL PURPOSE BACKFLOW PREVENTION DEVICE INSTALLATION.
3. INSTALL FLANGED COUPLING ADAPTER AND SPOOL PIECE IF REQUIRED FOR FIELD INSTALLATION.
4. GATE VALVES OR BALL VALVES NORMALLY COME AS PART OF BACKFLOW PREVENTION DEVICE, READY FOR INSTALLATION FROM MANUFACTURER.
5. THE APPROVED BACKFLOW PREVENTION DEVICE IS TO BE INSTALLED AS CLOSE AS POSSIBLE TO THE WATER METER WITH NO CROSS CONNECTIONS BETWEEN THE WATER METER AND BACKFLOW PREVENTION DEVICE.

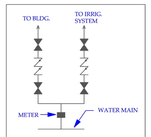

DUAL PURPOSE BACKFLOW PREVENTION DEVICE SCHEMATIC

MONTARA WATER AND SANITARY DISTRICT

BACKFLOW PREVENTION DEVICE INSTALLATION DETAIL

SIZE | FSCM NO. | DWG NO. SD-05 | REV

SCALE NONE | DATE: DEC 2006 | SHEET

REVISIONS				
ZONE	REV	DESCRIPTION	DATE	APPROVED
	1	REVISION 1	MAY 2011	TY
	2	REVISION 2	MAR 2018	TY

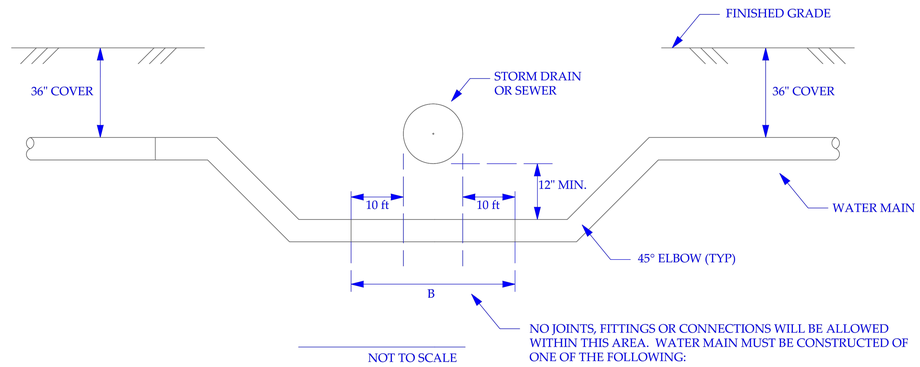

NOT TO SCALE

NO JOINTS, FITTINGS OR CONNECTIONS WILL BE ALLOWED WITHIN THIS AREA. WATER MAIN MUST BE CONSTRUCTED OF ONE OF THE FOLLOWING:

1. HDPE PIPE WITH FUSION-WELDED JOINTS (PER AWWA C906-99)
2. DUCTILE IRON PIPE WITH HOT DIP BITUMINOUS COATING
3. DIPPED AND WRAPPED ONE-FOURTH-INCH-THICK WELDED STEEL PIPE
4. CLASS 200 PRESSURE RATED PVC WATER PIPE (DR 14 PER AWWA C900-97)
5. REINFORCED CONCRETE PRESSURE PIPE, STEEL CYLINDER TYPE, PER AWWA (C300-97 OR C301-99 OR C303-95)

NOTE

AT CONTRACTORS DISCRETION THE WATER MAIN TRENCH CAN BE EXCAVATED ON A SLOPE TO INSTALL WATER MAIN INSTEAD OF USING FITTINGS. THE 12" MINIMUM SEPARATION AND "B" MEASUREMENT MUST BE MAINTAINED IN EITHER METHOD OF INSTALLATION.

REFERENCE:
DEPT. OF HEALTH SERVICES "WATER MAIN SEPARATION" 2015.
SECTION 64572, TITLE 22, CALIFORNIA ADMINISTRATIVE CODE.

MONTARA WATER AND SANITARY DISTRICT

WATER MAIN INSTALLATION UNDER STORM DRAIN AND SEWER

SIZE | FSCM NO. | DWG NO. SD-19 | REV

SCALE NONE | DATE: DEC 2006 | SHEET

Not for permitting or construction

PBK

ARCHITECT PBK Architects, Inc.

SAN LUIS OBISPO
1327 Archer Street, Suite 110
San Luis Obispo, CA 93401
805-529-3076
PBK.com

FIRE STATION #44
COASTSIDE FIRE PROTECTION DISTRICT

501 STETSON STREET
MOSS BEACH, CA 94038

BID SET

KEY PLAN

PLAN NORTH | TRUE NORTH

REGISTERED PROFESSIONAL ENGINEER
MARSHALL T. SWITT
No. C87439
CIVIL
STATE OF CALIFORNIA

CLIENT
COASTSIDE FIRE PROTECTION DISTRICT

PROJECT NUMBER
230137

DATE 9/17/2026

DRAWN BY: BS | CHKED BY: MS

REVISIONS

#	DESCRIPTION	DATE

MWSD CONSTRUCTION STANDARD DETAILS

This document is for plan review only

C1.2

REVISIONS				
ZONE	REV	DESCRIPTION	DATE	APPROVED
	1	REVISION 1	MAY 2011	TY
	2	REVISION 2	MAR 2018	TY

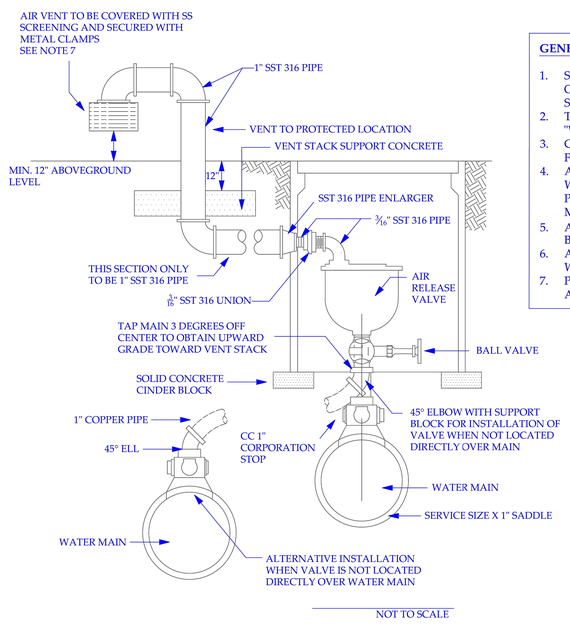

GENERAL NOTES

1. STANDARD CHRISTY B-9 METER BOX MANUFACTURED BY OLDCASTLE ENCLOSURE SOLUTIONS TO BE LOCATED BEHIND SIDEWALK.
2. TRAFFIC MODEL METER BOX WITH METAL LID MARKED "WATER" TO BE INSTALLED WHEN SUBJECT TO TRAFFIC AREA.
3. CORPORATION STOP AND/OR SADDLE TO BE AT LEAST 2 FT. FROM END OF WATER MAIN.
4. ALTERNATIVE INSTALLATION (DASHED LINES) TO BE USED WHEN VALVE IS NOT LOCATED DIRECTLY OVER WATER MAIN. PIPE FROM WATER MAIN MUST ALWAYS GO UPHILL FROM MAIN TO AIR RELEASE VALVE.
5. APCO 1" 200a VALVE WITH 3/16" ORIFICE OR APPROVED EQUAL TO BE INSTALLED.
6. APCO 1" 143C OR 145C COMBINATION VALVE TO BE INSTALLED WHEN AIR RELEASE AND VACUUM VALVE IS SPECIFIED.
7. PROVIDE SECURED ENCLOSURE APPROVED BY MWSD, IF THE AIR VENT IS LOCATED IN PUBLIC ACCESS AREA.

MONTARA WATER AND SANITARY DISTRICT

AIR RELEASE VALVE INSTALLATION

SIZE | FSCM NO. | DWG NO. SD-08 | REV

SCALE NONE | DATE: DEC 2006 | SHEET

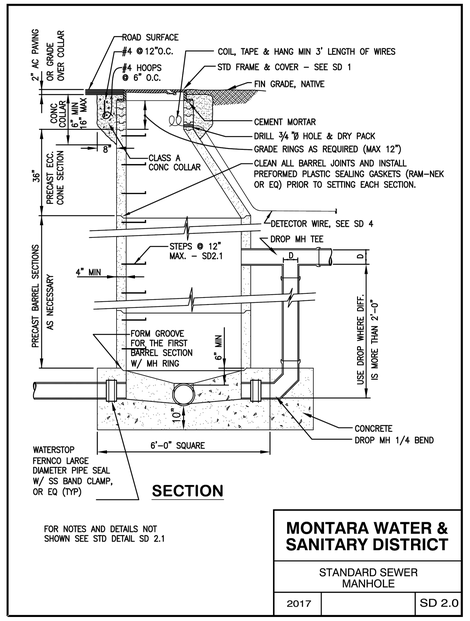

SECTION

FOR NOTES AND DETAILS NOT SHOWN SEE STD DETAIL SD 2.1

MONTARA WATER & SANITARY DISTRICT

STANDARD SEWER MANHOLE

2017 | SD 2.0

NOTES

1. MANHOLE BASE SHALL BE CLASS A (6-sack) CONCRETE AND SHALL BE POURED AGAINST CRUSHED ROCK BEDDING.
2. PRECAST CONCRETE CONE, BARREL AND GRADE RINGS SHALL CONFORM TO A.S.T.M. Spec C-478, EXCEPT THAT TYPE II Modified PORTLAND CEMENT SHALL BE USED.
3. STEPS SHALL BE POLYPROPYLENE REINFORCED WITH 1/2" GRADE 60 STEEL BAR AS DETAILED BELOW, #PS 2-PF AS MANUFACTURED BY M.A. INDUSTRIES OR EQ.
4. FRAME AND COVER MAY BE ADJUSTED TO GRADE LEVEL EITHER BEFORE OR AFTER PAVING, BUT FINAL GRADE SHALL CONFORM TO ADJACENT FINISH PAVEMENT GRADE WITHIN 1/8".
5. ECCENTRIC CONE SECTION SHALL BE POSITIONED AS DIRECTED BY THE DISTRICT.
6. WHERE FRAME AND COVER IS SET AFTER PAVING, THE CONCRETE COLLAR SHALL BE BROUGHT TO FINISH GRADE AND THE EXPOSED CONCRETE SURFACE SHALL BE COLORED WITH LAMPBLACK.
7. RECESS IN MANHOLE BASE SHALL BE FORMED WITH AN APPROVED METAL FORMING RING TO RECEIVE PRECAST MANHOLE JOINT. PREFORMED PLASTIC SEAL GASKET SHALL BE INSTALLED BEFORE PLACING FIRST BARREL SECTION.
8. PRECAST MANHOLE BASES ARE NOT ALLOWED.

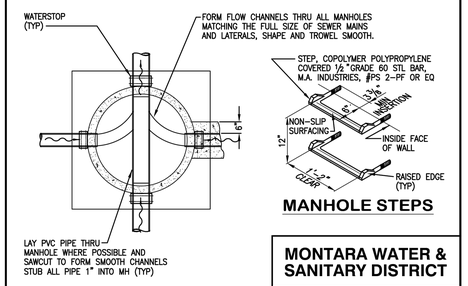

PLAN AT MH BOTTOM

MANHOLE STEPS

MONTARA WATER & SANITARY DISTRICT

STANDARD SEWER MANHOLE

2017 | SD 2.1

REQUIRED SEPARATION BETWEEN WATER MAINS AND SANITARY SEWERS

REVISIONS				
ZONE	REV	DESCRIPTION	DATE	APPROVED
	1	REVISION 1	MAY 2011	TY

BASIC SEPARATION REQUIREMENTS:

WATER MAIN AND SEWERS SHOULD BE SEPARATED AS FAR AS IS REASONABLE IN BOTH THE HORIZONTAL AND VERTICAL DIRECTIONS WITH SEWERS ALWAYS LOWER THEN WATER MAINS.

PARALLEL CONSTRUCTION: THE HORIZONTAL DISTANCE BETWEEN WATER MAINS AND SEWERS SHALL BE AT LEAST 10 FEET.

PERPENDICULAR CONSTRUCTION (CROSSING): WATER MAINS SHALL BE AT LEAST 1 FOOT ABOVE SANITARY SEWERS WHERE THESE LINES MUST CROSS. PIPE SHALL BE INSTALLED AS TO MAXIMIZE DISTANCES BETWEEN THE WATER AND SEWER PIPE JOINTS.

PARALLEL CONSTRUCTION

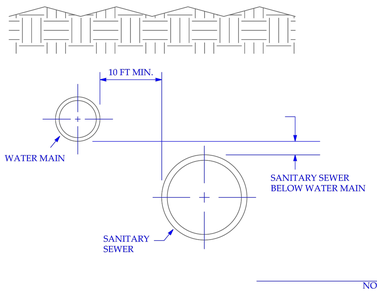

PERPENDICULAR CONSTRUCTION

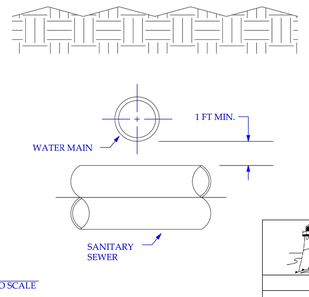

MONTARA WATER AND SANITARY DISTRICT

REQUIRED SEPARATION BETWEEN WATER MAINS AND SANITARY SEWERS

SIZE | FSCM NO. | DWG NO. SD-20 | REV

SCALE NONE | DATE: DEC 2006 | SHEET

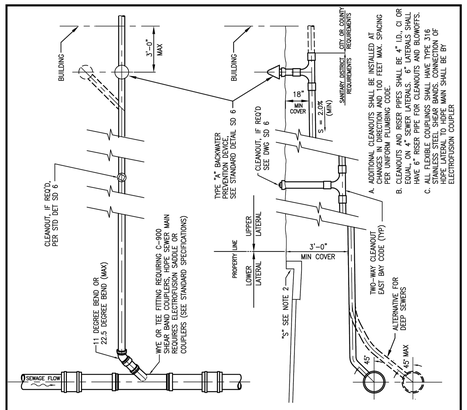

NOTES:

1. WHEN A LATERAL SEWER IS INSTALLED IN ADVANCE OF THE BUILDING SEWER, IT SHALL BE TERMINATED AT OR NEAR THE PROPERTY LINE. THE END OF THE LATERAL SHALL BE MARKED WITH A 4" x 4" REDWOOD STAKE, PAINTED GREEN, FROM THE TOP OF THE PIPE TO A MINIMUM OF 6" ABOVE THE FINISHED GROUND SURFACE.
2. WHERE CONCRETE CURBS AND GUTTERS EXIST OR ARE TO BE A PART OF AN IMPROVEMENT, EACH SIDE SEWER SHALL BE PERMANENTLY LOCATED BY IMPRINTING OR CHISELING AN "S" (3" size) IN THE FACE OF THE CURB VERTICALLY ABOVE THE SEWER PIPE.
3. BACKFILL SHALL NOT BE PLACED UNTIL PIPE INSTALLATION HAS BEEN INSPECTED AND APPROVED BY THE DISTRICT. PIPE BEDDING 3" AROUND PIPE ON PRIVATE PROPERTY MAY BE SAND WHERE REQUIRED BY COUNTY BUILDING PERMIT.
4. TYPE A BACKWATER PREVENTION DEVICE (CONTRA COSTA RELIEF VALVE, ALSO KNOWN AS MUSHROOM CAP) SHALL BE INSTALLED ON A 4" MINIMUM RISER PIPE NOT MORE THAN 2' FROM BUILDING WALL, PER STANDARD DETAIL SD6.
5. TYPE A BACKWATER PREVENTION DEVICE MAY BE INSTALLED TO LEFT OR RIGHT SIDE OF LATERAL IN GARAGE OR STEP AREAS.
6. LATERAL TRENCHES IN AREA OF PUBLIC STREET CURB, GUTTER AND SIDEWALK SHALL BE COMPACTED THE SAME AS TYPICAL TRENCH DETAIL SD 4. AREAS AROUND NEW CONCRETE CLEAN-OUT BOXES SHALL BE SOILS TESTED TO 90% COMPACTED. CONTRACTOR IS TO USE WHATEVER MEANS NECESSARY TO ACHIEVE 90% COMPACTION.

MONTARA WATER & SANITARY DISTRICT

TYPICAL SIDE SEWER DETAILS

2017 | SD 5

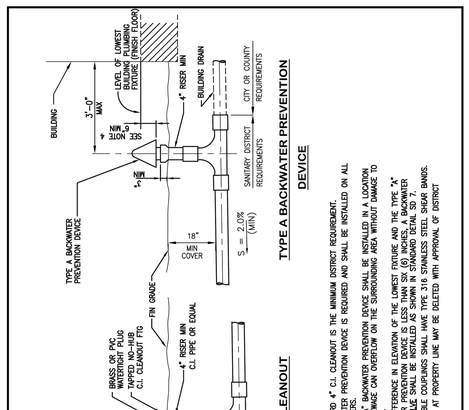

CLEANOUT BOXES IF REQUIRED:

CLEANOUTS LOCATED UNDER PAVED DRIVEWAYS, WALKWAYS, OR PARKING AREAS TO GRADE AND INSTALLED IN PRECAST CONC METER BOXES FLUSH FITTED TO PAVING W/ CONC COLLAR, TRAFFIC RATED WITH TRAFFIC LIDS MARKED "SEWER". CHRISTY B9 W/ 61015 LID, OR EQUAL, AS DIRECTED BY THE DISTRICT. PLACE 1 CU. FT. OF PEA GRAVEL AS BELOW AND DRAIN ROCK TO PREVENT RODENT INTRUSION.

STANDARD CLEANOUT

TYPE A BACKWATER PREVENTION DEVICE

NOTES:

1. A STANDARD 4" C.I. CLEANOUT IS THE MINIMUM DISTRICT REQUIREMENT.
2. A BACKWATER PREVENTION DEVICE IS REQUIRED AND SHALL BE INSTALLED ON ALL SIDE SEWERS.
3. A TYPE "A" BACKWATER PREVENTION DEVICE SHALL BE INSTALLED IN A LOCATION WHERE SEWAGE CAN OVERFLOW ON THE SURROUNDING AREA WITHOUT DAMAGE TO PROPERTY.
4. IF THE DIFFERENCE IN ELEVATION OF THE LOWEST FIXTURE AND THE TYPE "A" BACKWATER PREVENTION DEVICE IS LESS THAN SIX (6) INCHES, A BACKWATER CHECK VALVE SHALL BE INSTALLED AS SHOWN IN STANDARD DETAIL SD 7.
5. ALL FLEXIBLE COUPLINGS SHALL HAVE TYPE 316 STAINLESS STEEL SHEAR BANDS.
6. CLEANOUT AT PROPERTY LINE MAY BE DELETED WITH APPROVAL OF DISTRICT ENGINEER.

MONTARA WATER & SANITARY DISTRICT

STANDARD CLEANOUT AND BACKWATER PREVENTION DEVICE

2017 | SD 6

Not for permitting or construction

PBK

ARCHITECT PBK Architects, Inc.
PBK.com
SAN LUIS OBISPO
1327 Archer Street, Suite 110
San Luis Obispo, CA 93401
805-529-3076

FIRE STATION #44
COASTSIDE FIRE PROTECTION DISTRICT

501 STETSON STREET
MOSS BEACH, CA 94038

BID SET

BID SET

KEY PLAN

PLAN NORTH | TRUE NORTH

REGISTERED PROFESSIONAL ENGINEER
MARSHALL T. SWITT
No. C87439
CIVIL
STATE OF CALIFORNIA

CLIENT
COASTSIDE FIRE PROTECTION DISTRICT

PROJECT NUMBER
230137

DATE 9/17/2026

DRAWN BY: BS | CHKED BY: MS

REVISIONS

#	DESCRIPTION	DATE

This document is for plan review only

MWSD CONSTRUCTION STANDARD DETAILS

C1.3

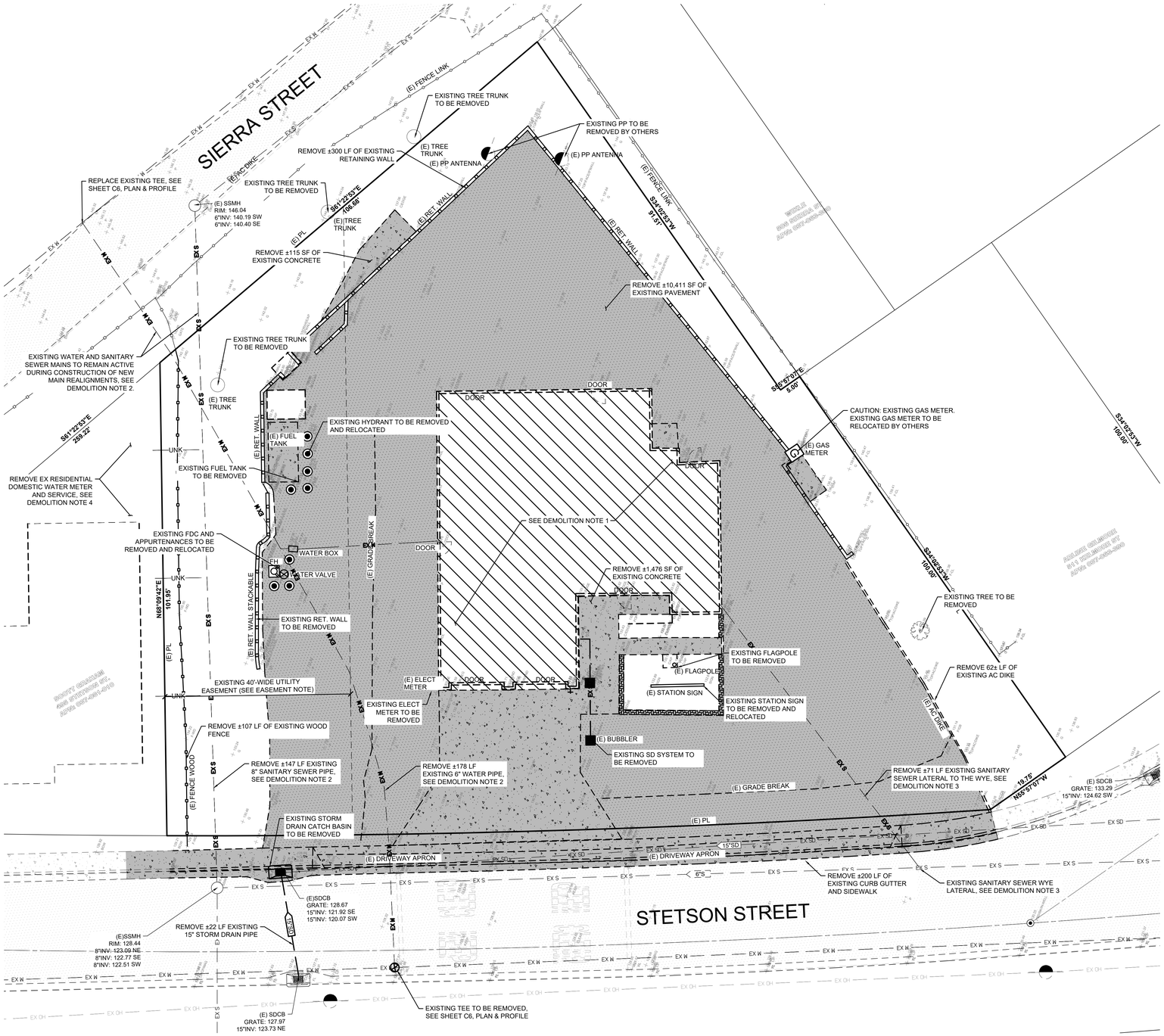

TOPO NOTES:

1. THE LOCATION OF EXISTING UTILITIES ARE SHOWN FROM RECORD DRAWINGS & FIELD SURVEY INFORMATION. PRIOR TO CONSTRUCTION THE CONTRACTOR SHALL VERIFY THE LOCATION OF ALL UTILITIES INCLUDING THOSE NOT SHOWN ON THESE PLANS. NOTIFY THE ENGINEER OF ANY DISCREPANCIES OR CONFLICTS AS SOON AS ENCOUNTERED. POT HOLE EXISTING UTILITIES PRIOR TO CONSTRUCTION. CONTRACTOR SHALL COORDINATE WITH DISTRICT STAFF TO DETERMINE IF UTILITIES CAN BE REMOVED OR IF THEY NEED TO BE RE-ROUTED.
2. UNLESS OTHERWISE IDENTIFIED ALL EXISTING FACILITIES SHOWN IN THE TOPOGRAPHIC AND DEMO PLAN ARE TO BE PRESERVED AND PROTECTED DURING CONSTRUCTION. CONTACT DESIGN ENGINEER IF FACILITIES SHOWN TO REMAIN COME IN CONFLICT WITH PROPOSED IMPROVEMENTS.
3. ALL EXISTING UTILITIES WERE PLOTTED FROM RECORD INFORMATION AND FIELD TOPOGRAPHY. ACTUAL LOCATIONS MAY VARY AND ADDITIONAL CROSSINGS MAY EXIST IN THE FIELD. IT IS IMPERATIVE THAT "U.S.A." LOCATION SERVICES ARE LOCATED AND MARKED PRIOR TO START OF EXCAVATION.
4. THE CONTRACTOR SHALL USE EXTREME CAUTION WHEN EXPOSING EXISTING UTILITY CROSSINGS AND SERVICES.
5. ANY DAMAGE TO EXISTING UTILITIES WILL BE SOLE RESPONSIBILITY OF THE CONTRACTOR.
6. ANY DAMAGE TO EXISTING SIDEWALK, CURB OR GUTTER WILL BE SOLE RESPONSIBILITY OF THE CONTRACTOR, WITH REPLACEMENT TO BE DETERMINED BY THE ENGINEER.
7. CONTRACTOR SHALL ADJUST EXISTING MANHOLE RIMS, WATER VALVES, AND MONUMENT BOXES TO FINISH GRADE.
8. ALL SAWCUTS SHALL BE MADE AT EXISTING EXPANSION OR WEAKENED PLANE JOINTS WITH APPROVAL PENDING CITY REPRESENTATIVE.
9. CONTRACTOR TO CHECK WHAT KIND OF OIL IS IN THE EXISTING ONSITE OIL PIT AND APPLY FOR SAN MATEO COUNTY ENVIRONMENTAL HEALTH PERMIT TO REMOVE IF APPLICABLE.

DEMOLITION NOTES:

1. EXISTING SEWER AND WATER LATERALS WERE NOT LOCATED DURING FIELD SURVEY. CONTRACTOR TO REMOVE ALL EXISTING APPURTENANCES INCLUDING, BUT NOT LIMITED TO, WATER VALVES, CHECK VALVES, BACKFLOW PREVENTERS, FIRE HYDRANTS AND SEWER TAP/WYE FITTINGS. CONTRACTOR REQUIRED TO CUT AND PROVIDE A SEALED PIPE CAP AND A 4X4 POST PAINTED GREEN INSTALLED SOLIDLY AND VISIBLE OVER THE PIPE END CAP PER MONTARA WASTE AND SANITARY DISTRICT (MWSD) CODE. CONTRACTOR SHALL NOTIFY THE ENGINEER OF ANY DISCREPANCIES.
2. EXISTING WATER AND SANITARY SEWER MAINS SHALL REMAIN IN SERVICE AND OPERATIONAL UNTIL THE NEW MAIN REALIGNMENTS HAVE BEEN CONSTRUCTED, TESTED, APPROVED, AND PLACED INTO SERVICE. CONTRACTOR SHALL PROTECT EXISTING MAINS AND APPURTENANCES DURING CONSTRUCTION. ANY REQUIRED SHUTDOWNS OR INTERRUPTIONS TO WATER OR SANITARY SEWER SERVICE SHALL BE COORDINATED IN ADVANCE WITH MWSD AND APPROVED BY THE DISTRICT. EXISTING MAINS SHALL NOT BE REMOVED OR TAKEN OUT OF SERVICE UNTIL THE NEW MAINS HAVE BEEN ACCEPTED BY MWSD AND AUTHORIZATION TO DISCONTINUE THE EXISTING MAINS HAS BEEN PROVIDED BY THE DISTRICT.
3. CONTRACTOR SHALL POTHOLE, LOCATE, AND VERIFY EXISTING SEWER LATERAL PRIOR TO CONSTRUCTION. EXISTING LATERAL SHALL BE LOCATED AT THE EXISTING WYE AND REMOVED IN ITS ENTIRETY AND SHALL BE CAPPED AT THE EXISTING WYE IN ACCORDANCE WITH MWSD STANDARD SPECIFICATIONS AND REQUIREMENTS.
4. EXISTING WATER SERVICE LOCATION IS APPROXIMATE. CONTRACTOR SHALL FIELD VERIFY LOCATION PRIOR TO CONSTRUCTION AND NOTIFY ENGINEER OF RECORD IF LOCATION DIFFERS FROM THAT SHOWN ON PLANS.

EASEMENT NOTE:

1. THE EXISTING 40-FOOT-WIDE UTILITY EASEMENT LOCATED WITHIN THE ABANDONED CHICO STREET RIGHT-OF-WAY IS TO BE MODIFIED AS PART OF THIS PROJECT. A 17-FOOT-WIDE SANITARY SEWER EASEMENT WILL REMAIN FOR THE EXISTING SANITARY SEWER PIPELINE. THE REMAINING PORTION OF THE EXISTING EASEMENT, WHICH DOES NOT CONTAIN UTILITY FACILITIES, SHALL BE ABANDONED BY SEPARATE INSTRUMENT. SEE UTILITY PLAN, SHEET C5, FOR NEW 17-FOOT-WIDE WATER AND SANITARY SEWER EASEMENT.

DEMOLITION LEGEND

- SAWCUT LINE
- EXISTING BUILDING & APPURTENANCES TO BE REMOVED: SEE DEMOLITION NOTES
- EXISTING PAVEMENT: (TO BE REMOVED)
- EXISTING PAVEMENT: (TO REMAIN)
- EXISTING CONCRETE: (TO BE REMOVED)
- EXISTING CONCRETE: (TO REMAIN)

NORTH

0 5 10

UTILITY CONSTRUCTION NOTES AND REQUIREMENTS:

1. EXISTING WATER MAIN SHUTDOWN:
   A TEMPORARY SHUTDOWN OF THE EXISTING WATER MAIN FOR A PERIOD NOT TO EXCEED FOUR (4) MONTHS IS ACCEPTABLE TO MWSD TO FACILITATE CONSTRUCTION OF THE NEW WATER MAIN. CONTRACTOR SHALL COORDINATE THE SHUTDOWN WITH MWSD AND SHALL NOT INTERRUPT WATER SERVICE WITHOUT PRIOR WRITTEN APPROVAL FROM THE DISTRICT.
2. RELOCATION OF 495 STETSON STREET WATER AND SEWER SERVICES:
   THE EXISTING WATER AND SANITARY SEWER SERVICES SERVING 495 STETSON STREET SHALL BE REMOVED AND RELOCATED FROM CHICO STREET TO STETSON STREET. NEW SERVICES SHALL BE PLACED IN SERVICE, INSPECTED, AND APPROVED BY MWSD PRIOR TO DISCONNECTION, ABANDONMENT, OR REMOVAL OF THE EXISTING CHICO STREET WATER OR SANITARY SEWER FACILITIES SERVING THE PROPERTY.
3. TEMPORARY SANITARY SEWER:
   THE EXISTING SANITARY SEWER SYSTEM SHALL REMAIN CONTINUOUSLY OPERATIONAL DURING CONSTRUCTION.A TEMPORARY SANITARY SEWER MAIN SHALL BE INSTALLED BETWEEN SIERRA STREET AND STETSON STREET PRIOR TO DEMOLITION OR REMOVAL OF THE EXISTING SANITARY SEWER FACILITIES. PRIOR TO COMMENCEMENT OF SUCH DEMOLITION OR REMOVAL, CONTRACTOR SHALL SUBMIT A METHOD OF PROCEDURE (MOP) AND PLAN FOR INSTALLATION, OPERATION, MAINTENANCE, AND REMOVAL OF THE TEMPORARY SANITARY SEWER MAIN TO THE MWSD SEWER ENGINEER FOR REVIEW AND WRITTEN APPROVAL. ALL WORK SHALL BE PERFORMED IN ACCORDANCE WITH THE APPROVED MOP, APPROVED PLAN, AND APPLICABLE MWSD REQUIREMENTS.
4. TEMPORARY WATER MAIN SHUTDOWN AND ISOLATION:
   EXISTING WATER FACILITIES SHALL BE PROPERLY REMOVED FROM SERVICE AND ISOLATED IN ACCORDANCE WITH MWSD REQUIREMENTS DURING ANY PERIOD THAT THE EXISTING WATER MAIN IS OUT OF SERVICE. PRIOR TO ANY INTERRUPTION OF WATER SERVICE, DEMOLITION, OR REMOVAL OF THE AFFECTED WATER FACILITIES, CONTRACTOR SHALL SUBMIT A METHOD OF PROCEDURE (MOP) AND PLAN ADDRESSING SHUTDOWN, ISOLATION, TEMPORARY WATER SERVICE, AS APPLICABLE, AND RESTORATION OF SERVICE TO THE MWSD WATER ENGINEER FOR REVIEW AND WRITTEN APPROVAL. ALL WORK SHALL BE PERFORMED IN ACCORDANCE WITH THE APPROVED MOP, APPROVED PLAN, AND APPLICABLE MWSD REQUIREMENTS.

Not for permitting or construction

PBK

ARCHITECT PBK Architects, Inc.
PBK.com
SAN LUIS OBISPO
1327 Archer Street, Suite 110
San Luis Obispo, CA 93401
805-529-3076

FIRE STATION #44
COASTSIDE FIRE PROTECTION DISTRICT

501 STETSON STREET
MOSS BEACH, CA 94038
BID SET

BID SET

KEY PLAN

PLAN NORTH TRUE NORTH

REGISTERED PROFESSIONAL ENGINEER
MARSHALL T. SWIFT
No. C87939
CIVIL
STATE OF CALIFORNIA

CLIENT
COASTSIDE FIRE PROTECTION DISTRICT
PROJECT NUMBER
230137
DATE 9/17/2026
DRAWN BY: BS CHKED BY: MS
REVISIONS

#	DESCRIPTION	DATE

This document is for plan review only

TOPOGRAPHIC SURVEY AND DEMOLITION PLAN

C2

SIERRA STREET
STETSON STREET
PROPOSED BUILDING
FUEL TANK
GENERATOR
98.19' LF OF SOLDIER PILE RETAINING WALL
141.31' LF OF SOLDIER PILE RETAINING WALL
9.5' LF OF RETAINING WALL
60.69' LF OF SOLDIER PILE RETAINING WALL
25.15' LF OF SOLDIER PILE RETAINING WALL
12.5' LF OF L-TYPE RETAINING WALL
9.47' LF OF L-TYPE RETAINING WALL
32.29' LF OF L-TYPE RETAINING WALL
EXISTING GAS METER
EXISTING GAS METER
EXISTING GAS METER

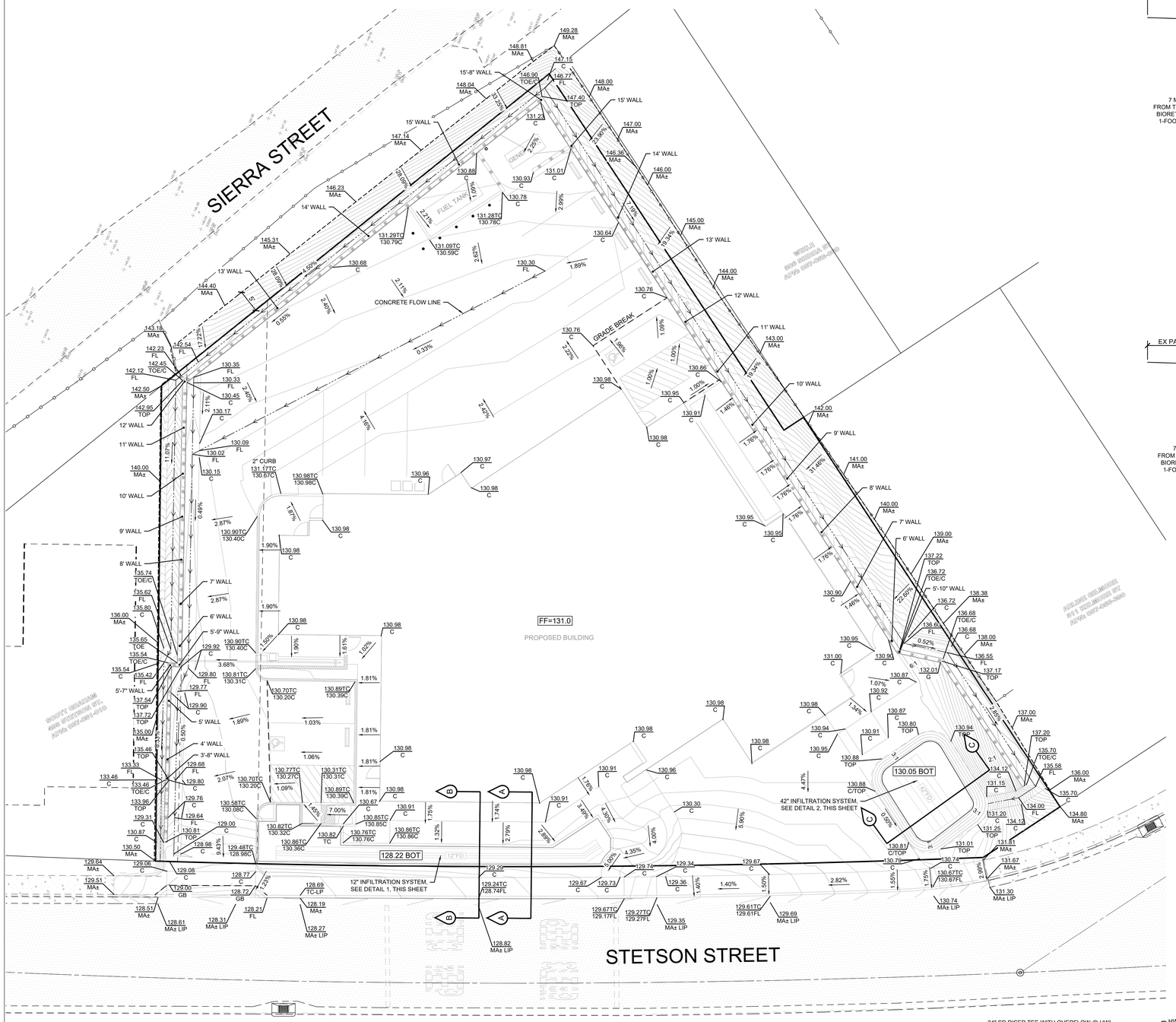

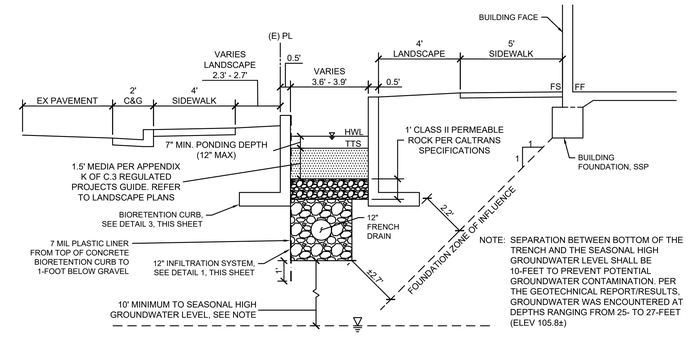

A BIORETENTION AREA - BUILDING FOUNDATION ZONE OF INFLUENCE

SCALE: 1" = 3'

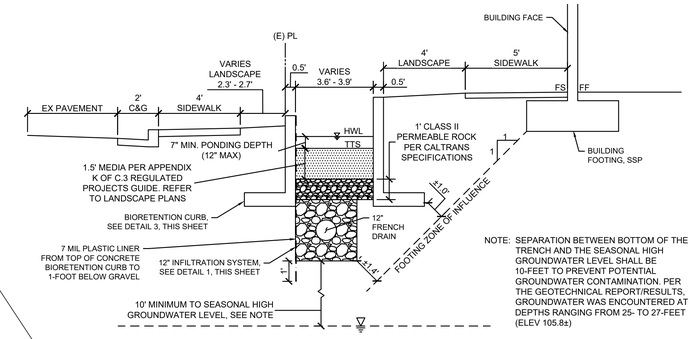

B BIORETENTION AREA - BUILDING FOOTING ZONE OF INFLUENCE

SCALE: 1" = 3'

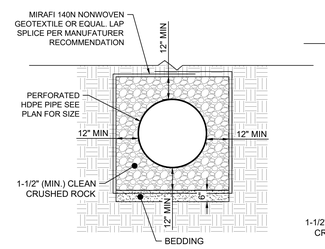

1 12" INFILTRATION SYSTEM

NOT TO SCALE

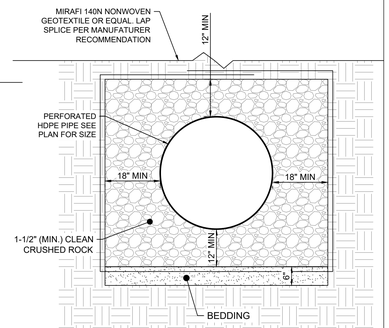

2 42" INFILTRATION SYSTEM

NOT TO SCALE

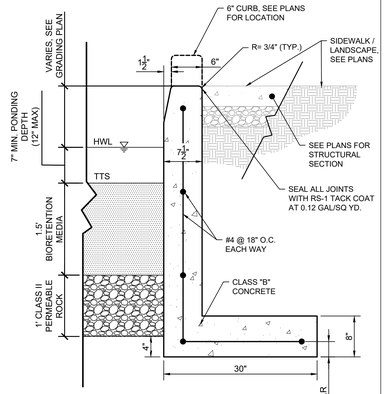

3 BIORETENTION CURB

NOT TO SCALE

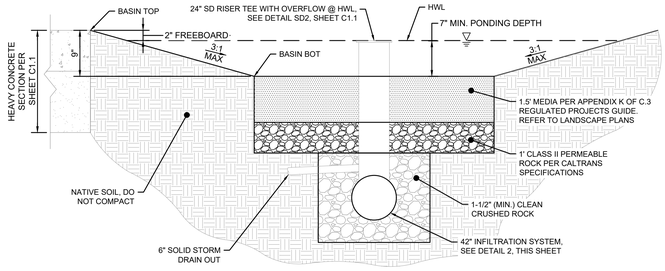

C BIORETENTION AREA

NOT TO SCALE

EXISTING

XXXX EXISTING GROUND

PROPOSED

XX.XX / XX ELEVATION

X.XX% SLOPE

DIRECTION OF FLOWLINE

GRADING NOTES:

1. SURFACE GRADES AT EXTERIOR DOORS AND LANDINGS SHALL HAVE SLOPES NO STEEPER THAN 1.9% IN ANY DIRECTION.
2. ENTRANCE GRADES AT LANDINGS SHALL NOT BE LOWER THAN 1/4-INCH FROM BUILDING FINISH FLOOR ELEVATION.
3. SEE ARCHITECTURAL DRAWINGS FOR ALL CONCRETE PATTERNS & SCORING.
4. PER CBC 1804.4, ALL GRADED AREAS ADJACENT TO THE FOUNDATION SHALL DRAIN AWAY AT A MINIMUM OF 5% FOR 10 FEET AND A MINIMUM OF 2% AWAY FROM THE FOUNDATION FOR FINISHED SURFACES FOR 10 FEET.
5. NO NET INCREASE IN STORMWATER RUNOFF (RELATIVE TO UNDEVELOPED CONDITIONS) MAY DRAIN ONTO ADJACENT PROPERTIES. THE EXISTING STORM DRAINAGE FROM THE ADJACENT PROPERTIES SHALL NOT BE BLOCKED BY THE NEW DEVELOPMENT.
6. THE OWNER SHALL ADEQUATELY MAINTAIN THE PROPERTY'S STORMWATER MANAGEMENT FACILITIES.
7. CONCRETE RESTORATION/REPLACEMENT SHALL BE JOINT TO JOINT, MONOLITHIC.
8. REMOVE A MINIMUM 12" WIDE ASPHALT CONCRETE FOR CONCRETE CONFORMS.

AGOTA

0 5 10

NOTE: ALL WORK IN THE PUBLIC RIGHT OF WAY MUST HAVE ENCROACHMENT PERMITS PRIOR TO START OF WORK.

Not for permitting or construction

PBK

ARCHITECT PBK Architects, Inc.
PBK.com
SAN LUIS OBISPO
1327 Archer Street, Suite 110
San Luis Obispo, CA 93401
805-229-3076

FIRE STATION #44
COASTSIDE FIRE PROTECTION DISTRICT

501 STETSON STREET
MOSS BEACH, CA 94038

BID SET

KEY PLAN

PLAN NORTH TRUE NORTH

REGISTERED PROFESSIONAL ENGINEER MARSHALL T. SWIFT No. C47931 CIVIL STATE OF CALIFORNIA

CLIENT
COASTSIDE FIRE PROTECTION DISTRICT

PROJECT NUMBER	230137
DATE	9/17/2026
DRAWN BY: BS	CHKED BY: MS

REVISIONS

#	DESCRIPTION	DATE

This document is for plan review only

GRADING PLAN

C4

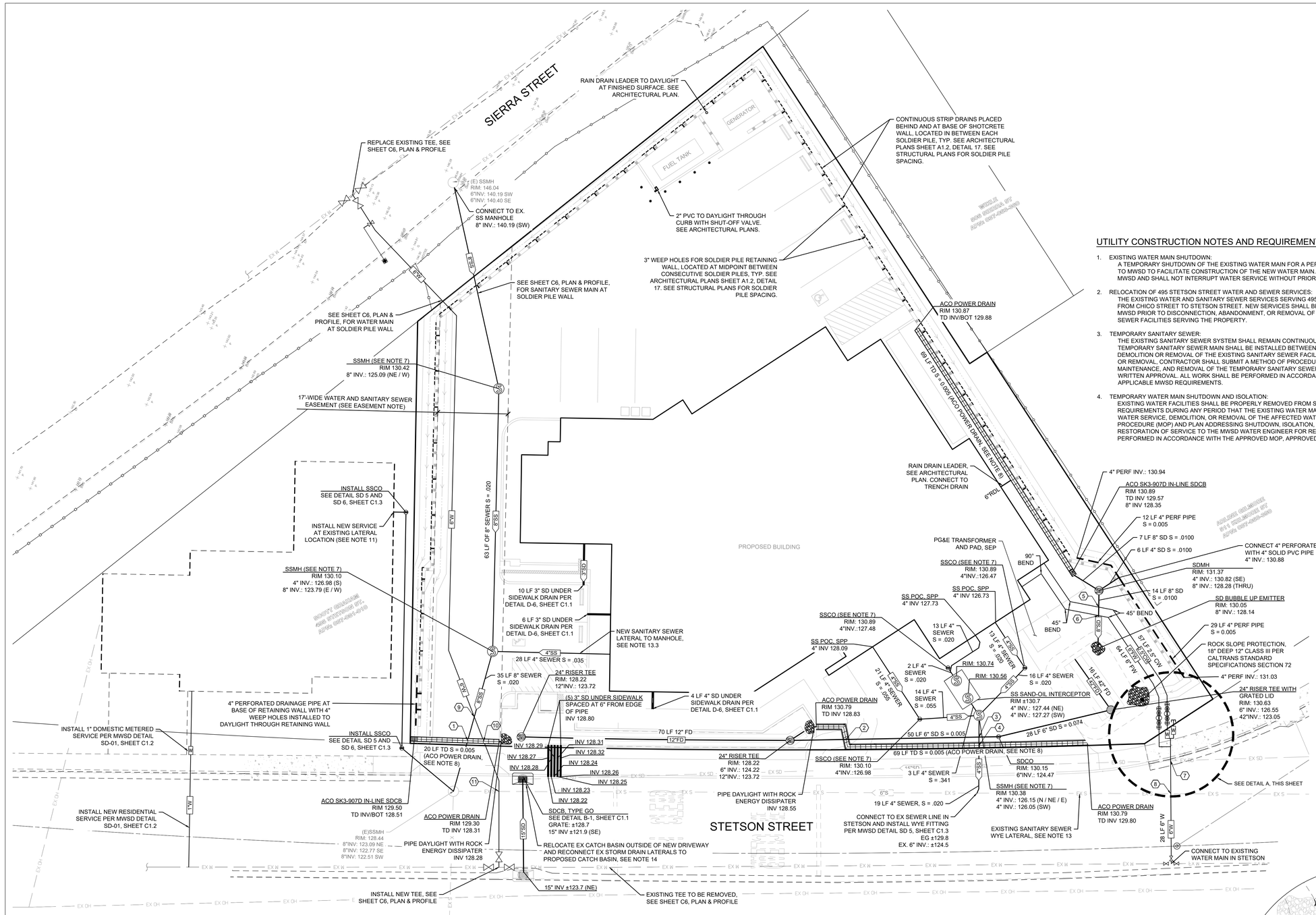

UTILITY CONSTRUCTION NOTES AND REQUIREMENTS:

1. EXISTING WATER MAIN SHUTDOWN:
   A TEMPORARY SHUTDOWN OF THE EXISTING WATER MAIN FOR A PERIOD NOT TO EXCEED FOUR (4) MONTHS IS ACCEPTABLE TO MWSD TO FACILITATE CONSTRUCTION OF THE NEW WATER MAIN. CONTRACTOR SHALL COORDINATE THE SHUTDOWN WITH MWSD AND SHALL NOT INTERRUPT WATER SERVICE WITHOUT PRIOR WRITTEN APPROVAL FROM THE DISTRICT.
2. RELOCATION OF 495 STETSON STREET WATER AND SEWER SERVICES:
   THE EXISTING WATER AND SANITARY SEWER SERVICES SERVING 495 STETSON STREET SHALL BE REMOVED AND RELOCATED FROM CHICO STREET TO STETSON STREET. NEW SERVICES SHALL BE PLACED IN SERVICE, INSPECTED, AND APPROVED BY MWSD PRIOR TO DISCONNECTION, ABANDONMENT, OR REMOVAL OF THE EXISTING CHICO STREET WATER OR SANITARY SEWER FACILITIES SERVING THE PROPERTY.
3. TEMPORARY SANITARY SEWER:
   THE EXISTING SANITARY SEWER SYSTEM SHALL REMAIN CONTINUOUSLY OPERATIONAL DURING CONSTRUCTION. A TEMPORARY SANITARY SEWER MAIN SHALL BE INSTALLED BETWEEN SIERRA STREET AND STETSON STREET PRIOR TO DEMOLITION OR REMOVAL OF THE EXISTING SANITARY SEWER FACILITIES. PRIOR TO COMMENCEMENT OF SUCH DEMOLITION OR REMOVAL, CONTRACTOR SHALL SUBMIT A METHOD OF PROCEDURE (MOP) AND PLAN FOR INSTALLATION, OPERATION, MAINTENANCE, AND REMOVAL OF THE TEMPORARY SANITARY SEWER MAIN TO THE MWSD SEWER ENGINEER FOR REVIEW AND WRITTEN APPROVAL. ALL WORK SHALL BE PERFORMED IN ACCORDANCE WITH THE APPROVED MOP, APPROVED PLAN, AND APPLICABLE MWSD REQUIREMENTS.
4. TEMPORARY WATER MAIN SHUTDOWN AND ISOLATION:
   EXISTING WATER FACILITIES SHALL BE PROPERLY REMOVED FROM SERVICE AND ISOLATED IN ACCORDANCE WITH MWSD REQUIREMENTS DURING ANY PERIOD THAT THE EXISTING WATER MAIN IS OUT OF SERVICE. PRIOR TO ANY INTERRUPTION OF WATER SERVICE, DEMOLITION, OR REMOVAL OF THE AFFECTED WATER FACILITIES, CONTRACTOR SHALL SUBMIT A METHOD OF PROCEDURE (MOP) AND PLAN ADDRESSING SHUTDOWN, ISOLATION, TEMPORARY WATER SERVICE, AS APPLICABLE, AND RESTORATION OF SERVICE TO THE MWSD WATER ENGINEER FOR REVIEW AND WRITTEN APPROVAL. ALL WORK SHALL BE PERFORMED IN ACCORDANCE WITH THE APPROVED MOP, APPROVED PLAN, AND APPLICABLE MWSD REQUIREMENTS.

UTILITY NOTES:

1. ALL EXISTING UTILITIES WERE PLOTTED FROM RECORD INFORMATION AND FIELD TOPOGRAPHY. ACTUAL LOCATIONS MAY VARY AND ADDITIONAL CROSSINGS MAY EXIST IN THE FIELD. IT IS IMPERATIVE THAT "U.S.A" LOCATING SERVICES, LOCATE AND MARK UTILITIES PRIOR TO THE START OF EXCAVATION.
2. THE CONTRACTOR SHALL USE EXTREME CAUTION WHEN EXPOSING EXISTING UTILITY CROSSING AND SERVICES.
3. ANY DAMAGE TO EXISTING UTILITIES WILL BE THE SOLE RESPONSIBILITY OF THE CONTRACTOR.
4. GAS LINE SHOWN ON THIS DRAWING FOR UTILITY COORDINATION ONLY. DESIGN, MATERIALS AND SPECIFICATIONS BY OTHERS. SEE PLUMBING SITE PLAN.
5. ALL FIRE PROTECTION WATER LINE MATERIALS SHALL BE APPROVED BY THE LOCAL FIRE MARSHAL PRIOR TO INSTALLATION.
6. SEE FIRE PROTECTION PLAN FOR HYDRAULIC NODES ON FIRE SPRINKLER LINES.
7. ALL STRUCTURES WITHIN VEHICULAR PATH OF TRAVEL WITH LIDS, FRAMES, OR COVERS SHALL BE HL93 TRAFFIC RATED OR APPROVED EQUAL.
8. TRENCH DRAIN TO BE ACO POWER DRAIN S300K WITH LOAD CLASS F 4-BOLT IRON GRATE, OR APPROVED EQUAL. SEE DETAIL 7, SHEET C1.1.
9. ALL STORM DRAIN AND SANITARY SEWER LINES TO BE SDR 26, UNLESS OTHERWISE NOTED ON PLANS.
10. CONTRACTOR SHALL PROVIDE AT LEAST 7 WORKING DAYS ADVANCE NOTICE TO THE CIVIL ENGINEER TO COORDINATE INSPECTIONS OF THE STORMWATER MANAGEMENT FEATURES DURING CONSTRUCTION.
11. EXISTING SEWER LOCATION IS APPROXIMATE. CONTRACTOR SHALL FIELD VERIFY LOCATION PRIOR TO CONSTRUCTION AND NOTIFY ENGINEER OF RECORD IF LOCATION DIFFERS FROM THAT SHOWN ON PLANS.
12. EXISTING WATER AND SEWER MAINS TO REMAIN ACTIVE UNTIL NEW MAINS ARE IN SERVICE. SEE TOPOGRAPHIC SURVEY AND DEMOLITION PLAN, SHEET C2, FOR ADDITIONAL INFORMATION AND REQUIREMENTS.
13. SANITARY SEWER LATERAL CONNECTIONS:
    - 13.1. EXISTING LATERAL: CONTRACTOR SHALL POTHOLE, LOCATE, AND VERIFY EXISTING SEWER LATERAL PRIOR TO CONSTRUCTION. EXISTING LATERAL SHALL BE LOCATED AT THE EXISTING WYE AND REMOVED IN ITS ENTIRETY AND SHALL BE CAPPED AT THE EXISTING WYE IN ACCORDANCE WITH MWSD STANDARD SPECIFICATIONS AND REQUIREMENTS.
    - 13.2. NEW LATERAL: CONTRACTOR SHALL VERIFY EXISTING MAIN PIPE MATERIAL AT THE PROPOSED CONNECTION LOCATION PRIOR TO INSTALLATION.
      - 13.2.1. IF EXISTING MAIN IS REHABILITATED OR UPGRADED WITH HDPE, PROVIDE ELECTROFUSION (EF) WELDED WYE SADDLE CONNECTION. ALL HDPE PIPE JOINTS SHALL BE EF WELDED.
      - 13.2.2. IF EXISTING MAIN IS NOT HDPE, PROVIDE C900 WYE AND SHEAR-BAND COUPLERS.
    - 13.3. NEW LATERAL TO MANHOLE: WHERE HDPE IS USED FOR THE NEW SANITARY SEWER LATERAL, ALL PIPE JOINTS SHALL BE EF WELDED.

GENERAL NOTE:

1. THE EXISTING WATER SERVICE AT STETSON CANNOT BE UTILIZED FOR CONSTRUCTION WATER PURPOSES. A FIRE HYDRANT OR INDEPENDENT WATER SOURCE IS REQUIRED DURING CONSTRUCTION (I.E. WATER TRUCK).

UTILITY LEGEND:

- CONTINUOUS STRIP DRAIN AT SOLIDER PILE WALL, SAP FOR DETAILS
- PERFORATED DRAINAGE PIPE AT L-TYPE WALL FOOTING, SAP FOR DETAILS
- FRENCH DRAIN / INFILTRATION SYSTEM SEE DETAILS 1 AND 2, SHEET C4
- STORM DRAIN UNDER SIDEWALK DRAIN PER SMC STD DETAIL D-6, SHEET C1.1, SEE PLANS FOR SIZE
- SANITARY SEWER SAND-OIL INTERCEPTOR AND SAMPLE BOX. SEE PLUMBING SITE PLAN P1.1, PLUMBING SCHEDULE SHEET PO.2, ITEM SI-1, AND DETAIL 7, SHEET P5.1 FOR MORE INFORMATION AND CALCULATIONS

EASEMENT NOTE:

1. THIS 17-FOOT-WIDE WATER AND SANITARY SEWER EASEMENT IS TO REMAIN FOR THE NEW WATER AND SANITARY SEWER MAIN PIPELINES, WHICH WILL BE RECONSTRUCTED AS PART OF THIS PROJECT. THIS EASEMENT REPRESENTS A MODIFICATION OF THE EXISTING 40-FOOT-WIDE UTILITY EASEMENT LOCATED WITHIN THE ABANDONED CHICO STREET RIGHT-OF-WAY.

UTILITY CROSSINGS

ID	UTILITY #1	UTILITY #2	CLEARANCE (FT)
1	SD ACO BOT 128.28	8" SS TOP 124.06	4.25
2	SD ACO BOT 128.80	6" SD TOP 124.81	3.99
3	4" SS BOT 125.94	6" SD TOP 124.94	1.00
4	SD ACO BOT 128.93	4" SS TOP 126.24	2.69
5	6" SD BOT 128.22	2" CW TOP 127.22	1.00 [A]
6	6" SD BOT 128.20	6" FW TOP 127.20	1.00 [A]
7	6" W BOT 128.22	EX 15" SD TOP 125.14	3.10
8	6" W BOT 127.47	EX 6" SS TOP 125.67	1.91 [B]
9	6" W BOT 126.08	8" SS TOP 124.18	1.90 [B]
10	SD ACO BOT 128.08	6" W TOP 126.10	1.98 [A]
11	6" W BOT 124.70	EX 6" SS TOP 123.50	1.20 [B]

[A] CLEARANCE FOR WATER MAIN INSTALLATION UNDER STORM DRAIN OR SANITARY SEWER TO BE 12" MINIMUM PER MWSD STANDARD DETAIL SD-19, SHEET C1.2.

[B] CLEARANCE FOR WATER MAIN INSTALLATION SHALL BE AT LEAST 1 FOOT ABOVE SANITARY SEWER PER MWSD STANDARD DETAIL SD-20, SHEET C1.3.

NOTE: ALL WORK IN THE PUBLIC RIGHT OF WAY MUST HAVE ENCROACHMENT PERMITS PRIOR TO START OF WORK.

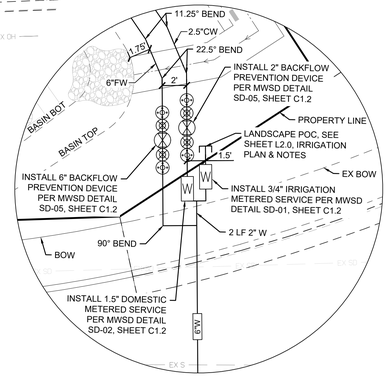

DETAIL A
SCALE: 1" = 5'

Not for permitting or construction

PBK

ARCHITECT PBK Architects, Inc.
PBK.com
SAN LUIS OBISPO
1327 Archer Street, Suite 110
San Luis Obispo, CA 93401
805-529-3076

FIRE STATION #44
COASTSIDE FIRE PROTECTION DISTRICT
501 STETSON STREET
MOSS BEACH, CA 94038
BID SET

BID SET

KEY PLAN
PLAN NORTH
TRUE NORTH

REGISTERED PROFESSIONAL ENGINEER
MARSHALL T. SPITT
No. C047437
CIVIL
STATE OF CALIFORNIA

CLIENT	COASTSIDE FIRE PROTECTION DISTRICT
PROJECT NUMBER	230137
DATE	9/17/2026
DRAWN BY: BS	CHKED BY: MS

REVISIONS

#	DESCRIPTION	DATE

UTILITY PLAN

This document is for plan review only

C5

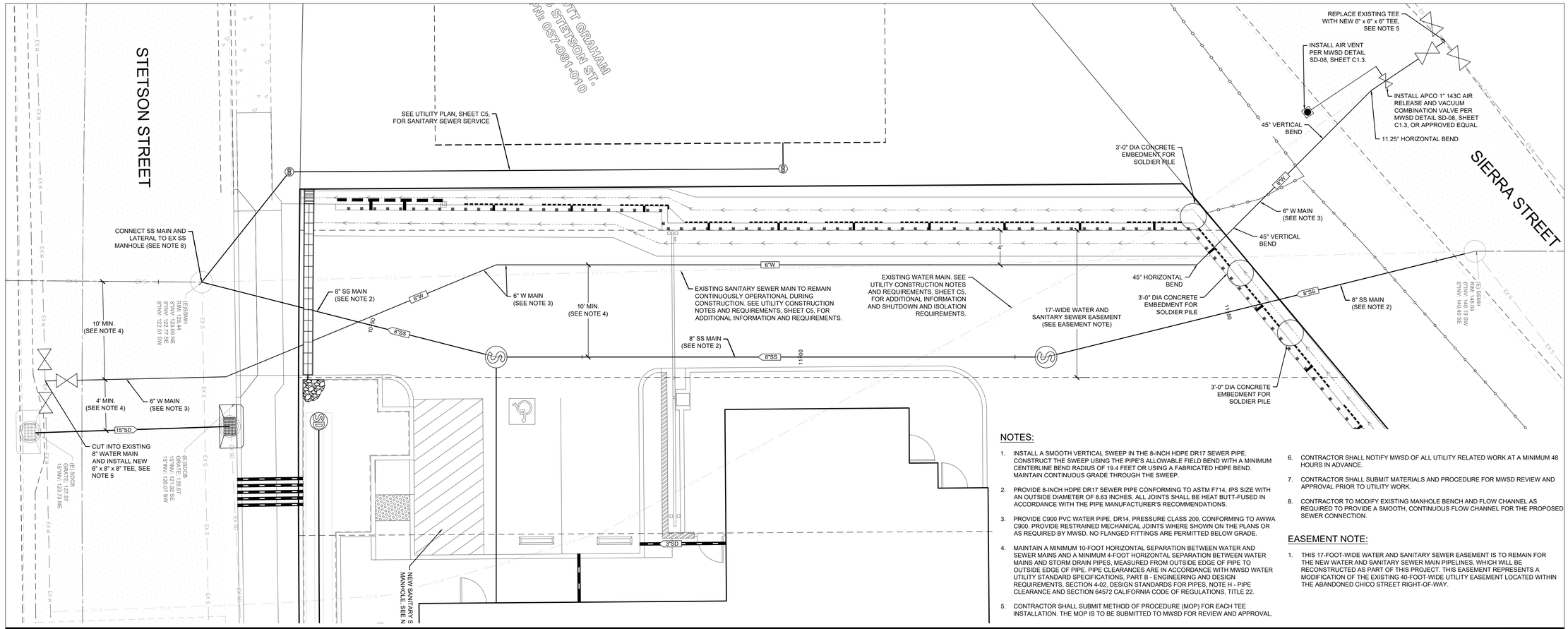

NOTES:

1. INSTALL A SMOOTH VERTICAL SWEEP IN THE 8-INCH HDPE DR17 SEWER PIPE. CONSTRUCT THE SWEEP USING THE PIPE'S ALLOWABLE FIELD BEND WITH A MINIMUM CENTERLINE BEND RADIUS OF 19.4 FEET OR USING A FABRICATED HDPE BEND. MAINTAIN CONTINUOUS GRADE THROUGH THE SWEEP.
2. PROVIDE 8-INCH HDPE DR17 SEWER PIPE CONFORMING TO ASTM F714, IPS SIZE WITH AN OUTSIDE DIAMETER OF 8.63 INCHES. ALL JOINTS SHALL BE HEAT BUTT-FUSED IN ACCORDANCE WITH THE PIPE MANUFACTURER'S RECOMMENDATIONS.
3. PROVIDE C900 PVC WATER PIPE, DR14, PRESSURE CLASS 200, CONFORMING TO AWWA C900. PROVIDE RESTRAINED MECHANICAL JOINTS WHERE SHOWN ON THE PLANS OR AS REQUIRED BY MWSD. NO FLANGED FITTINGS ARE PERMITTED BELOW GRADE.
4. MAINTAIN A MINIMUM 10-FOOT HORIZONTAL SEPARATION BETWEEN WATER AND SEWER MAINS AND A MINIMUM 4-FOOT HORIZONTAL SEPARATION BETWEEN WATER MAINS AND STORM DRAIN PIPES, MEASURED FROM OUTSIDE EDGE OF PIPE TO OUTSIDE EDGE OF PIPE. PIPE CLEARANCES ARE IN ACCORDANCE WITH MWSD WATER UTILITY STANDARD SPECIFICATIONS, PART B - ENGINEERING AND DESIGN REQUIREMENTS, SECTION 4-02, DESIGN STANDARDS FOR PIPES, NOTE H - PIPE CLEARANCE AND SECTION 64572 CALIFORNIA CODE OF REGULATIONS, TITLE 22.
5. CONTRACTOR SHALL SUBMIT METHOD OF PROCEDURE (MOP) FOR EACH TEE INSTALLATION. THE MOP IS TO BE SUBMITTED TO MWSD FOR REVIEW AND APPROVAL.
6. CONTRACTOR SHALL NOTIFY MWSD OF ALL UTILITY RELATED WORK AT A MINIMUM 48 HOURS IN ADVANCE.
7. CONTRACTOR SHALL SUBMIT MATERIALS AND PROCEDURE FOR MWSD REVIEW AND APPROVAL PRIOR TO UTILITY WORK.
8. CONTRACTOR TO MODIFY EXISTING MANHOLE BENCH AND FLOW CHANNEL AS REQUIRED TO PROVIDE A SMOOTH, CONTINUOUS FLOW CHANNEL FOR THE PROPOSED SEWER CONNECTION.

EASEMENT NOTE:

1. THIS 17-FOOT-WIDE WATER AND SANITARY SEWER EASEMENT IS TO REMAIN FOR THE NEW WATER AND SANITARY SEWER MAIN PIPELINES, WHICH WILL BE RECONSTRUCTED AS PART OF THIS PROJECT. THIS EASEMENT REPRESENTS A MODIFICATION OF THE EXISTING 40-FOOT-WIDE UTILITY EASEMENT LOCATED WITHIN THE ABANDONED CHICO STREET RIGHT-OF-WAY.

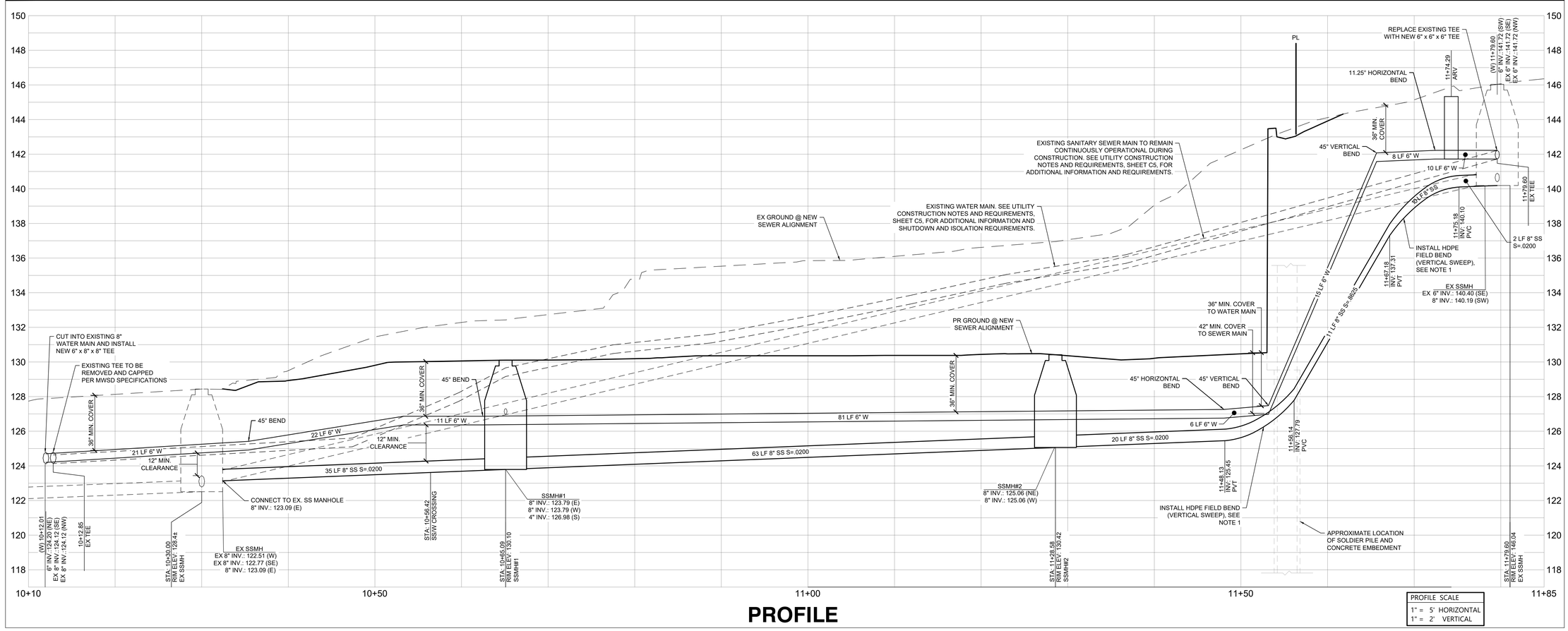

PROFILE

PROFILE SCALE
1" = 5' HORIZONTAL
1" = 2' VERTICAL

Not for permitting or construction

PBK

ARCHITECT PBK Architects, Inc.
PBK.com
SAN LUIS OBISPO
1327 Archer Street, Suite 110
San Luis Obispo, CA 93401
805-229-3076

FIRE STATION #44
COASTSIDE FIRE PROTECTION DISTRICT

501 STETSON STREET
MOSS BEACH, CA 94038
BID SET

BID SET

KEY PLAN

PLAN NORTH TRUE NORTH

REGISTERED PROFESSIONAL ENGINEER MARSHALL T. SWIFT No. C87939 CIVIL STATE OF CALIFORNIA

CLIENT
COASTSIDE FIRE PROTECTION DISTRICT
PROJECT NUMBER 230137
DATE 9/17/2026
DRAWN BY: BS CHKED BY: MS

REVISIONS

#	DESCRIPTION	DATE

This document is for plan review only

PLAN & PROFILE

C6

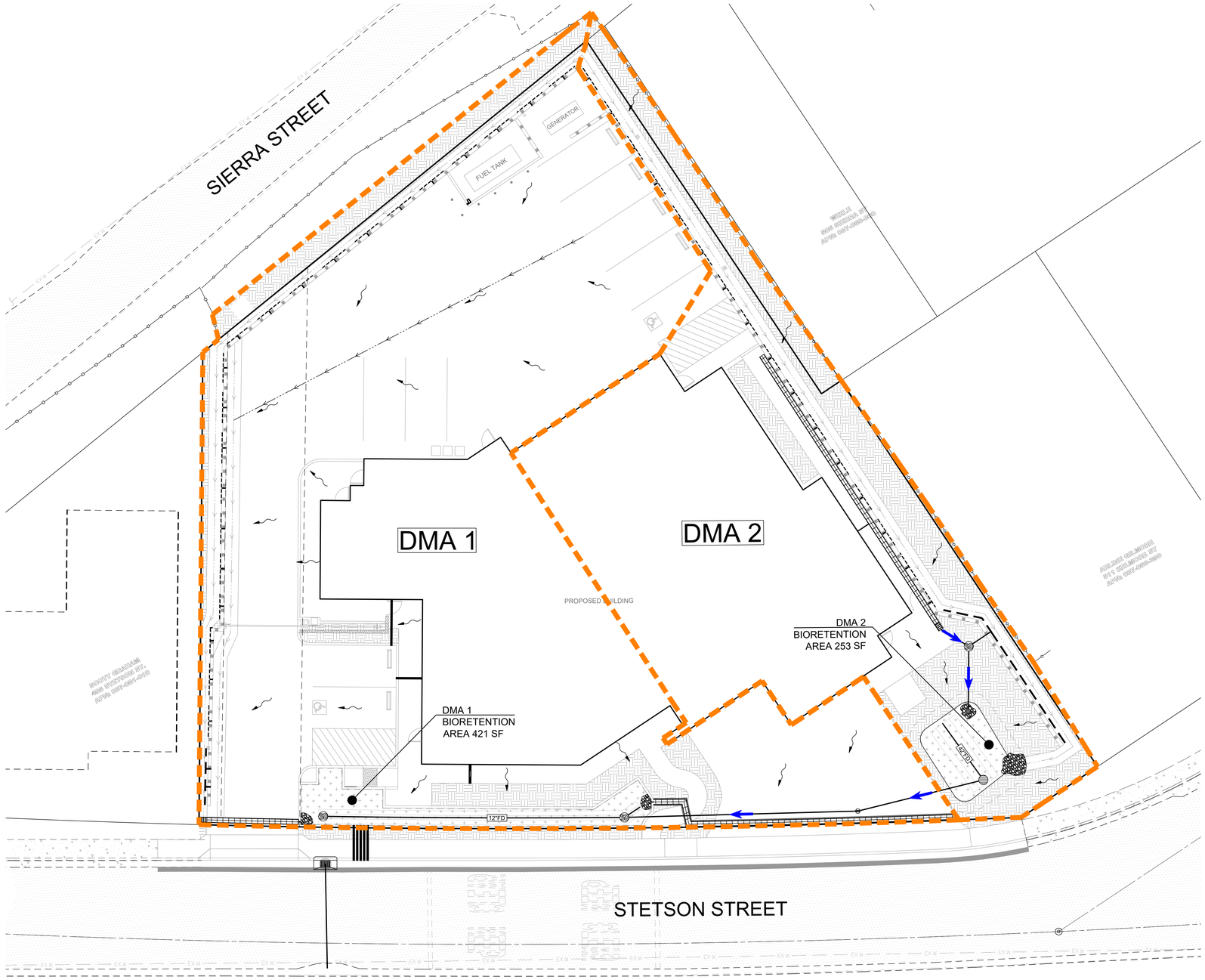

NOTES:

1. EXISTING UTILITIES AND SITE CONDITIONS SHOWN ON THIS PLAN SET ARE BASED ON AVAILABLE RECORD INFORMATION AND FIELD SURVEY. SHOULD FIELD CONDITIONS DIFFER FROM WHAT IS SHOWN ON THESE PLANS, CONTACT THE OWNER'S REPRESENTATIVE FOR DIRECTION AND CLARIFICATION PRIOR TO PROCEEDING WITH CONSTRUCTION ACTIVITIES.
2. NOTIFY UNDERGROUND SERVICE ALERT (USA) AT 1(800)-642-2444 AT LEAST 48 HOURS PRIOR TO COMMENCING WORK.
3. THIS PROJECT IS A C.3 REGULATED PROJECT AS IT CREATES 10,000 SF OR MORE OF IMPERVIOUS SURFACE. STORMWATER TREATMENT WILL BE PROVIDED BY THE BIORETENTION AREAS 1 AND 2.
4. EACH BIORETENTION FACILITY SHALL BE LABELED "NO DUMPING - FLOWS TO RIVER" USING AN APPROVED METHOD.
5. REFER TO LANDSCAPING PLANS FOR PLANTING DETAILS.

LEGEND:

- BIORETENTION AREA
- LANDSCAPE AREA
- IMPERVIOUS AREA
- ACO POWER DRAIN, SEE UTILITY PLAN
- DRAINAGE MANAGEMENT AREA (DMA) BOUNDARY
- PROPOSED STORM DRAIN PIPE FLOW DIRECTION
- SURFACE FLOW DIRECTION
- FRENCH DRAIN / INFILTRATION SYSTEM SEE DETAILS 1 AND 2, SHEET C4

NORTH

0 5 10

DRAINAGE MANAGEMENT AREAS

DRAINAGE MANAGEMENT AREA	TOTAL AREA (SF)	IMPERVIOUS AREA (SF)	PERVIOUS AREA (SF)	BMP PROVIDED	BIORETENTION AREA REQUIRED (SF)	BIORETENTION AREA PROVIDED (SF)
DMA 1	14,675	13,191	1,484	BIORETENTION AREA	400	421
DMA 2	7,523	5,397	2,126	BIORETENTION AREA	168	253
TOTAL	22,198	18,588	3,610	-	568	674

Not for permitting or construction

PBK

ARCHITECT PBK Architects, Inc.
PBK.com
SAN LUIS OBISPO
1327 Archer Street, Suite 110
San Luis Obispo, CA 93401
805-529-3076

FIRE STATION #44
COASTSIDE FIRE PROTECTION DISTRICT

501 STETSON STREET
MOSS BEACH, CA 94038

BID SET

BID SET

KEY PLAN

PLAN NORTH TRUE NORTH

REGISTERED PROFESSIONAL ENGINEER
MARSHALL T. SWIFT
No. C87439
CIVIL
STATE OF CALIFORNIA

CLIENT
COASTSIDE FIRE PROTECTION DISTRICT

PROJECT NUMBER
230137

DATE 9/17/2026

DRAWN BY: BS CHKED BY: MS

REVISIONS

#	DESCRIPTION	DATE

STORMWATER CONTROL PLAN

This document is for plan review only

C7

LEGEND

- STABILIZED CONSTRUCTION ENTRANCE (TC-1)
- STRAW ROLLS (SE-5)
- SILT FENCE (SE-1)
- DESIGNATED ENTRANCE/OUTLET TIRE WASH (TC-3)
- DESIGNATED VEHICLE MAINTENANCE AREA (NS-8, NS-9, NS-10)
- DESIGNATED CONCRETE WASHOUT AREA (WM-8)
- DESIGNATED JOB TRAILER & LAYDOWN AREA (WM-1)
- CURB INLET
- CATCH BASIN
- PROPOSED: CURB INLET SEDIMENT PROTECTION (SE-10, SEE DETAIL A)
- PROPOSED: DRAIN INLET SEDIMENT PROTECTION (SE-10, SEE DETAIL B)
- EXISTING: CURB INLET SEDIMENT PROTECTION (SE-10, SEE DETAIL C)
- GRAVEL BAGS

GENERAL NOTES:

1. EROSION AND SEDIMENT CONTROL MEASURES SHALL BE EFFECTIVE FOR THE DURATION OF THE CONSTRUCTION ACTIVITY.
2. NO STORM RUNOFF WATER SHALL BE ALLOWED TO DRAIN DIRECTLY INTO THE EXISTING UNDERGROUND STORM SYSTEM BEFORE THE ON-SITE STORM DRAIN SYSTEM, LANDSCAPE, AND PAVING IS INSTALLED AND COMPLETED.
3. AS SOON AS IS PRACTICAL AFTER THE NEW ON-SITE STORM DRAIN SYSTEM IS INSTALLED, THE CATCH BASINS SHALL BE INSTALLED AND GRAVEL BAGS AND SCREENS SHALL BE PLACED AROUND THE CATCH BASINS, AS SHOWN. THE CONTRACTOR SHALL HAVE AN OPTION TO INSTALL PREFABRICATED STEEL FRAMES WITH FILTER SCREEN OF FILTER FABRIC ATTACHED TO THE FRONT OF THE DRAIN INLET AND EXTEND 12 INCHES (12") ON EACH SIDE OF THE DRAIN INLET OPENING. FRAME SHALL BE APPROVED BY THE COUNTY ENGINEER AND SHALL FIT THE OPENING WITH LESS THAN ONE-QUARTER INCH (1/4") GAP AT ANY ONE POINT.
4. THE NAME, ADDRESS AND 24-HOUR TELEPHONE NUMBER OF THE PERSON RESPONSIBLE FOR IMPLEMENTATION OF THE EROSION AND SEDIMENTATION CONTROL PLAN SHALL BE PROVIDED.
5. A MINIMUM OF 50' OF DRAIN ROCK, 4" TO 6" DIAMETER, AT A MINIMUM DEPTH OF 12", SHALL BE INSTALLED AT EACH DRIVEWAY ENTRANCE TO THE SITE. THIS DOES NOT NEED TO BE DONE AT DRIVEWAYS, WHICH WILL BE CLOSED BY IMMOVABLE BARRICADES DURING CONSTRUCTION.
6. ALL EROSION AND SEDIMENTATION CONTROL MEASURES SHALL BE MAINTAINED UNTIL DISTURBED AREAS ARE STABILIZED. CHANGES TO THE EROSION AND SEDIMENTATION CONTROL PLAN SHALL BE MADE TO MEET FIELD CONDITIONS, BUT ONLY WITH THE APPROVAL OF OR AT THE DIRECTION OF THE COUNTY ENGINEER.
7. ALL SIDEWALK AND PAVED AREAS SHALL BE KEPT CLEAR OF EARTH MATERIAL AND DEBRIS. THE SITE SHALL BE MAINTAINED SO AS TO MINIMIZE SEDIMENT LADEN RUNOFF FROM ENTERING ANY STORM DRAINAGE SYSTEM.
8. THE EROSION AND SEDIMENTATION CONTROL PLAN COVERS ONLY THE FIRST WINTER DURING WHICH CONSTRUCTION IS TO TAKE PLACE. PLAN AMENDMENTS SHALL BE PREPARED BY THE PROJECT QSD AS DEEMED NECESSARY.
9. IT IS THE RESPONSIBILITY OF THE CONTRACTOR TO INSPECT AND REPAIR ALL EROSION CONTROL FACILITIES AT THE END OF EACH WORK DAY.
10. IT IS THE RESPONSIBILITY OF THE CONTRACTOR TO CLEAN OUT SEDIMENT BASINS WHENEVER THE LEVEL OF SEDIMENT REACHES THE MANUFACTURERS SEDIMENT CLEAN OUT LEVEL.
11. IT IS THE RESPONSIBILITIES OF THE CONTRACTOR TO PROTECT TEMPORARY BORROW AREAS AND/OR STOCKPILES WITH APPROPRIATE EROSION CONTROL MEASURES.
12. THE CLEANING OF PAVED STREETS, DURING AND AT THE COMPLETION OF CONSTRUCTION, SHALL BE PERFORMED WITH MECHANICAL SWEEPERS. THE USE OF WATER TRUCKS TO "WASH DOWN" THE STREET IS PROHIBITED.
13. THE FOLLOWING PLANS ARE ACCURATE FOR EROSION CONTROL PURPOSES ONLY.
14. THE INFORMATION ON THIS PLAN IS INTENDED TO BE USED AS A GUIDELINE FOR THE CONTRACTOR AND SUBCONTRACTORS TO COMPLY WITH THE REQUIREMENTS OF THE STATE WATER RESOURCES CONTROL BOARD. FIELD CONDITIONS MAY NECESSITATE MODIFICATIONS TO THIS PLAN.
15. NO ON-SITE FUELING SHALL TAKE PLACE.
16. ADDITIONAL STABILIZED CONSTRUCTION ENTRANCES MAY BE REQUIRED, OR LOCATIONS MAY BE CHANGED, AS DETERMINED BY PROJECT CONSTRUCTION STAFF.
17. ANY CHANGES TO THE PROJECT SWPPP SHALL BE APPROVED BY THE PROJECT QSD PRIOR TO BEING IMPLEMENTED.

CONCRETE WASTE MANAGEMENT NOTES

CONCRETE SLURRY WASTES

1. PCC AND AC WASTE SHALL NOT BE ALLOWED TO ENTER STORM DRAINS OR WATERCOURSES.
2. PCC AND AC WASTE SHALL BE COLLECTED AND DISPOSED OF IN A TEMPORARY CONCRETE WASHOUT FACILITY.
3. A SIGN SHALL BE INSTALLED ADJACENT TO EACH TEMPORARY CONCRETE WASHOUT FACILITY TO INFORM CONCRETE EQUIPMENT OPERATORS TO UTILIZE THE PROPER FACILITIES.
4. DO NOT ALLOW SLURRY RESIDUE FROM WET CORING OR SAW-CUTTING AC OR PCC TO ENTER STORM DRAINS OR RECEIVING WATERS.
5. VACUUM SLURRY RESIDUE AND DISPOSE IN A TEMPORARY PIT AND ALLOW SLURRY TO DRY. DISPOSE OF DRY SLURRY RESIDUE IN ACCORDANCE WITH BMP WM-5.
6. COLLECT RESIDUE FROM GROOVING AND GRINDING OPERATIONS IN ACCORDANCE WITH STANDARD SPECIFICATIONS SECTION 42-1.02 AND 42-2.02, "CONSTRUCTION."

ON-SITE TEMPORARY CONCRETE WASHOUT FACILITY, TRANSIT TRUCK WASHOUT PROCEDURES

1. TEMPORARY CONCRETE WASHOUT FACILITIES SHALL BE LOCATED A MINIMUM OF 50 FT FROM STORM DRAIN INLETS, OPEN DRAINAGE FACILITIES, AND WATERCOURSES, UNLESS DETERMINED UNFEASIBLE BY THE ENGINEER. EACH FACILITY SHALL BE LOCATED AWAY FROM CONSTRUCTION TRAFFIC OR ACCESS AREAS TO PREVENT DISTURBANCE OR TRACKING.
2. A SIGN SHALL BE INSTALLED ADJACENT TO EACH WASHOUT FACILITY TO INFORM CONCRETE EQUIPMENT OPERATORS TO UTILIZE THE PROPER FACILITIES.
3. TEMPORARY CONCRETE WASHOUT FACILITIES SHALL BE CONSTRUCTED ABOVE GRADE. TEMPORARY CONCRETE WASHOUT FACILITIES SHALL BE CONSTRUCTED AND MAINTAINED IN SUFFICIENT QUANTITY AND SIZE TO CONTAIN ALL LIQUID AND CONCRETE WASTE GENERATED BY WASHOUT OPERATIONS.
4. TEMPORARY WASHOUT FACILITIES SHALL HAVE A TEMPORARY PIT OR BERMED AREAS OF SUFFICIENT VOLUME TO COMPLETELY CONTAIN ALL LIQUID AND WASTE CONCRETE MATERIALS GENERATED DURING WASHOUT PROCEDURES.
5. PERFORM WASHOUT OF CONCRETE TRUCKS IN DESIGNATED AREAS ONLY.
6. ONCE CONCRETE WASTES ARE WASHED INTO THE DESIGNATED AREA AND ALLOWED TO HARDEN, THE CONCRETE SHALL BE BROKEN UP, REMOVED, AND DISPOSED. DISPOSE OF HARDENED CONCRETE ON A REGULAR BASIS.

TEMPORARY CONCRETE WASHOUT FACILITY (TYPE ABOVE GRADE)

1. TEMPORARY CONCRETE WASHOUT FACILITY (TYPE ABOVE GRADE) SHALL BE CONSTRUCTED AS SHOWN ON THE PLANS, WITH A RECOMMENDED MINIMUM LENGTH AND MINIMUM WIDTH OF 10 FEET, BUT WITH SUFFICIENT QUANTITY AND VOLUME TO CONTAIN ALL LIQUID AND CONCRETE WASTE GENERATED BY WASHOUT OPERATIONS. THE LENGTH AND WIDTH OF A FACILITY MAY BE INCREASED, AT THE CONTRACTOR'S EXPENSE, UPON APPROVAL OF THE ENGINEER.
2. PLASTIC LINING MATERIAL SHALL BE A MINIMUM OF 60 ML POLYETHYLENE SHEETING AND SHALL BE FREE OF HOLES, TEARS OR OTHER DEFECTS THAT COMPROMISE THE IMPERMEABILITY OF THE MATERIAL.

REMOVAL OF TEMPORARY CONCRETE WASHOUT FACILITIES

1. WHEN TEMPORARY CONCRETE WASHOUT FACILITIES ARE NO LONGER REQUIRED FOR THE WORK, AS DETERMINED BY THE ENGINEER, THE HARDENED CONCRETE SHALL BE REMOVED AND DISPOSED OF. MATERIALS USED TO CONSTRUCT TEMPORARY CONCRETE WASHOUT FACILITIES SHALL BECOME THE PROPERTY OF THE CONTRACTOR, SHALL BE REMOVED FROM THE SITE OF THE WORK, AND SHALL BE DISPOSED OF.
2. HOLES, DEPRESSIONS OR OTHER GROUND DISTURBANCE CAUSED BY THE REMOVAL OF THE TEMPORARY CONCRETE WASHOUT FACILITIES SHALL BE BACKFILLED AND REPAIRED IN CONFORMANCE WITH THE PROJECT SPECIFICATIONS.
3. THE CONTRACTOR'S WASTE POLLUTION CONTROL MANAGER (WPCM) SHALL MONITOR ON SITE CONCRETE WASTE STORAGE AND DISPOSAL PROCEDURES AT LEAST WEEKLY.
4. THE WPCM SHALL MONITOR CONCRETE WORKING TASKS, SUCH AS SAW CUTTING, CORING, GRINDING AND GROOVING AT LEAST WEEKLY TO ENSURE PROPER METHODS ARE EMPLOYED.
5. TEMPORARY CONCRETE WASHOUT FACILITIES SHALL BE MAINTAINED TO PROVIDE ADEQUATE HOLDING CAPACITY WITH A MINIMUM FREEBOARD OF 4" FOR ABOVE GRADE FACILITIES AND 12" FOR BELOW GRADE FACILITIES. MAINTAINING TEMPORARY CONCRETE WASHOUT FACILITIES SHALL INCLUDE REMOVING AND DISPOSING OF HARDENED CONCRETE AND RETURNING THE FACILITIES TO A FUNCTIONAL CONDITION. HARDENED CONCRETE MATERIALS SHALL BE REMOVED AND DISPOSED OF IN CONFORMANCE WITH THE PROVISIONS IN SECTION 15-3.02, "REMOVAL METHODS", OF THE STANDARD SPECIFICATIONS.
6. EXISTING FACILITIES MUST BE CLEANED, OR NEW FACILITIES MUST BE CONSTRUCTED AND READY FOR USE ONCE THE WASHOUT IS 75% FULL.

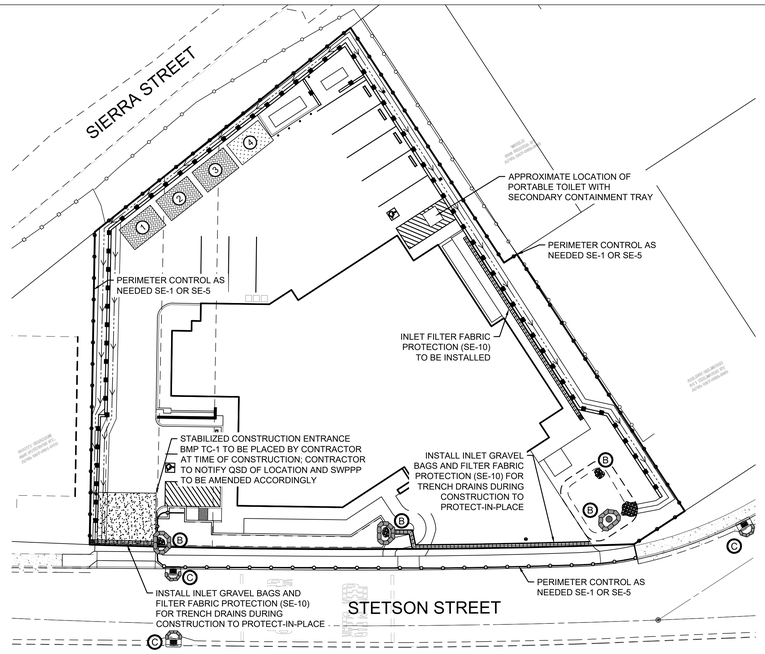

WDID# XXXXX

STABILIZED CONSTRUCTION ENTRANCE

1. THE MATERIAL FOR CONSTRUCTION OF THE STABILIZED CONSTRUCTION ENTRANCE SHALL BE 4 TO 6 INCH STONE.
2. THE THICKNESS OF THE PAD SHALL NOT BE LESS THAN 12 INCHES.
3. THE WIDTH OF THE PAD SHALL NOT BE LESS THAN THE FULL WIDTH OF ALL POINTS OF INGRESS OR EGRESS, OR 30' MIN.
4. THE LENGTH OF THE PAD SHALL BE AS REQUIRED, BUT NOT LESS THAN 50 FEET.
5. THE ENTRANCE SHALL BE MAINTAINED IN A CONDITION THAT WILL PREVENT TRACKING OR FLOWING OF SEDIMENT ONTO PUBLIC RIGHT-OF-WAY. THIS MAY REQUIRE PERIODIC TOP DRESSING WITH ADDITIONAL STONE AS CONDITIONS DEMAND, AND REPAIR AND/OR CLEAN OUT ANY MEASURES USED TO TRAP SEDIMENT. ALL SEDIMENT SPILLED, DROPPED, WASHED OR TRACKED ONTO PUBLIC RIGHT-OF-WAY SHALL BE REMOVED IMMEDIATELY.
6. WHEN NECESSARY, WHEELS SHALL BE CLEANED TO REMOVE SEDIMENT PRIOR TO ENTRANCE ONTO PUBLIC RIGHT-OF-WAY. WHEN WASHING IS REQUIRED, IT SHALL BE DONE ON AN AREA STABILIZED WITH CRUSHED STONE THAT DRAINS INTO AN APPROVED SEDIMENT TRAP, OR SEDIMENT BASIN. ALL SEDIMENT SHALL BE PREVENTED FROM ENTERING ANY STORM DRAIN, DITCH, OR WATERCOURSE THROUGH USE OF SANDBAGS, GRAVEL, BOARDS, OR OTHER APPROVED METHODS.
7. CONTRACTOR TO REMOVE AND DISPOSE OF STABILIZED CONSTRUCTION ENTRANCE UPON COMPLETION OF CONSTRUCTION.
8. THE SAN MATEO COUNTY RAINY SEASON IS BETWEEN OCTOBER 1ST AND APRIL 30TH.

NOTE: AGGREGATE ROCK SIZE SHALL BE 3"-6".

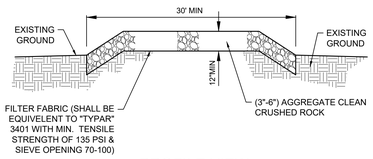

PROFILE VIEW

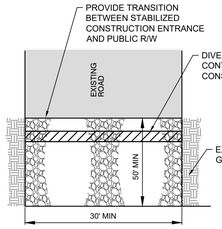

PLAN VIEW

TC-1 STABILIZED CONSTRUCTION ENTRANCE

NOT TO SCALE

Silt Fence SE-1

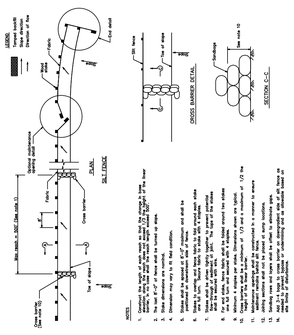

July 2012 California Stormwater BMP Handbook Portal Construction www.casqa.org 7 of 9

Storm Drain Inlet Protection SE-10

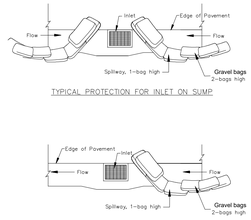

TYPICAL PROTECTION FOR INLET ON SUMP

TYPICAL PROTECTION FOR INLET ON GRADE

NOTES:
1. Intended for short-term use.
2. Use to inhibit non-storm water flow.
3. Allow for proper maintenance and cleanup.
4. Bags must be removed after adjacent operation is completed
5. Not applicable in areas with high silts and clays without filter fabric.
6. Protection can be effective even if it is not immediately adjacent to the inlet provided that the inlet is protected from potential sources of pollution.

June 2012 California Stormwater BMP Handbook Construction www.casqa.org 9 of 10

Fiber Rolls SE-5

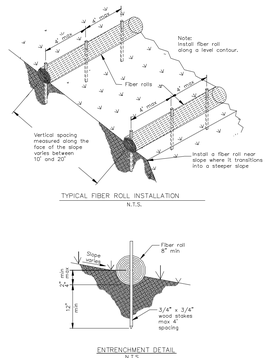

TYPICAL FIBER ROLL INSTALLATION
N.T.S.

ENTRENCHMENT DETAIL
N.T.S.

July 2012 California Stormwater BMP Handbook Portal Construction www.casqa.org 5 of 5

Concrete Waste Management WM-8

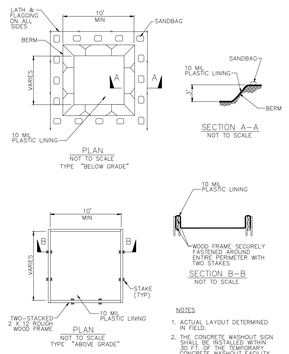

NOTES
1. ACTUAL LAYOUT DETERMINED IN FIELD.
2. THE CONCRETE WASHOUT SIGN SHALL BE INSTALLED WITHIN 30 FT. OF THE TEMPORARY CONCRETE WASHOUT FACILITY.

July 2012 California Stormwater BMP Handbook Construction www.casqa.org 6 of 7

SAN MATEO COUNTYWIDE Water Pollution Prevention Program
Clean Water. Healthy Community.

Construction Best Management Practices (BMPs)

Construction projects are required to implement the stormwater best management practices (BMP) on this page, as they apply to your project, all year long.

Materials & Waste Management

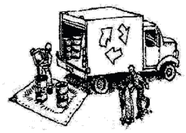

Non-Hazardous Materials
- ❑ Berm and cover stockpiles of sand, dirt or other construction material with tarps when rain is forecast or if not actively being used within 14 days.
- ❑ Use (but don't overuse) reclaimed water for dust control.

Hazardous Materials
- ❑ Label all hazardous materials and hazardous wastes (such as pesticides, paints, thinners, solvents, fuel, oil, and antifreeze) in accordance with city, county, state and federal regulations.
- ❑ Store hazardous materials and wastes in water tight containers, store in appropriate secondary containment, and cover them at the end of every work day or during wet weather or when rain is forecast.
- ❑ Follow manufacturer's application instructions for hazardous materials and be careful not to use more than necessary. Do not apply chemicals outdoors when rain is forecast within 24 hours.
- ❑ Arrange for appropriate disposal of all hazardous wastes.

Waste Management
- ❑ Cover waste disposal containers securely with tarps at the end of every work day and during wet weather.
- ❑ Check waste disposal containers frequently for leaks and to make sure they are not overfilled. Never hose down a dumpster on the construction site.
- ❑ Clean or replace portable toilets, and inspect them frequently for leaks and spills.
- ❑ Dispose of all wastes and debris properly. Recycle materials and wastes that can be recycled (such as asphalt, concrete, aggregate base materials, wood, gyp board, pipe, etc.)
- ❑ Dispose of liquid residues from paints, thinners, solvents, glues, and cleaning fluids as hazardous waste.

Construction Entrances and Perimeter
- ❑ Establish and maintain effective perimeter controls and stabilize all construction entrances and exits to sufficiently control erosion and sediment discharges from site and tracking off site.
- ❑ Sweep or vacuum any street tracking immediately and secure sediment source to prevent further tracking. Never hose down streets to clean up tracking.

Equipment Management & Spill Control

Maintenance and Parking
- ❑ Designate an area, fitted with appropriate BMPs, for vehicle and equipment parking and storage.
- ❑ Perform major maintenance, repair jobs, and vehicle and equipment washing off site.
- ❑ If refueling or vehicle maintenance must be done onsite, work in a bermed area away from storm drains and over a drip pan or drop cloths big enough to collect fluids. Recycle or dispose of fluids as hazardous waste.
- ❑ If vehicle or equipment cleaning must be done onsite, clean with water only in a bermed area that will not allow rinse water to run into gutters, streets, storm drains, or surface waters.
- ❑ Do not clean vehicle or equipment onsite using soaps, solvents, degreasers, or steam cleaning equipment.

Spill Prevention and Control
- ❑ Keep spill cleanup materials (e.g., rags, absorbents and cat litter) available at the construction site at all times.
- ❑ Inspect vehicles and equipment frequently for and repair leaks promptly. Use drip pans to catch leaks until repairs are made.
- ❑ Clean up spills or leaks immediately and dispose of cleanup materials properly.
- ❑ Do not hose down surfaces where fluids have spilled. Use dry cleanup methods (absorbent materials, cat litter, and/or rags).
- ❑ Sweep up spilled dry materials immediately. Do not try to wash them away with water, or bury them.
- ❑ Clean up spills on dirt areas by digging up and properly disposing of contaminated soil.
- ❑ Report significant spills immediately. You are required by law to report all significant releases of hazardous materials, including oil. To report a spill: 1) Dial 911 or your local emergency response number, 2) Call the Governor's Office of Emergency Services Warning Center, (800) 852-7550 (24 hours).

Earthmoving

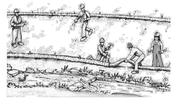

- ❑ Schedule grading and excavation work during dry weather.
- ❑ Stabilize all denuded areas, install and maintain temporary erosion controls (such as erosion control fabric or bonded fiber matrix) until vegetation is established.
- ❑ Remove existing vegetation only when absolutely necessary, and seed or plant vegetation for erosion control on slopes or where construction is not immediately planned.
- ❑ Prevent sediment from migrating offsite and protect storm drain inlets, gutters, ditches, and drainage courses by installing and maintaining appropriate BMPs, such as fiber rolls, silt fences, sediment basins, gravel bags, berms, etc.
- ❑ Keep excavated soil on site and transfer it to dump trucks on site, not in the streets.

Contaminated Soils
- ❑ If any of the following conditions are observed, test for contamination and contact the Regional Water Quality Control Board:
  - Unusual soil conditions, discoloration, or odor.
  - Abandoned underground tanks.
  - Abandoned wells
  - Buried barrels, debris, or trash.

Paving/Asphalt Work

- ❑ Avoid paving and seal coating in wet weather or when rain is forecast, to prevent materials that have not cured from contacting stormwater runoff.
- ❑ Cover storm drain inlets and manholes when applying seal coat, tack coat, slurry seal, fog seal, etc.
- ❑ Collect and recycle or appropriately dispose of excess abrasive gravel or sand. Do NOT sweep or wash it into gutters.
- ❑ Do not use water to wash down fresh asphalt concrete pavement.

Sawcutting & Asphalt/Concrete Removal
- ❑ Protect nearby storm drain inlets when saw cutting. Use filter fabric, catch basin inlet filters, or gravel bags to keep slurry out of the storm drain system.
- ❑ Shovel, absorb, or vacuum saw-cut slurry and dispose of all waste as soon as you are finished in one location or at the end of each work day (whichever is sooner!).
- ❑ If sawcut slurry enters a catch basin, clean it up immediately.

Concrete, Grout & Mortar Application

- ❑ Store concrete, grout, and mortar away from storm drains or waterways, and on pallets under cover to protect them from rain, runoff, and wind.
- ❑ Wash out concrete equipment/trucks offsite or in a designated washout area, where the water will flow into a temporary waste pit, and in a manner that will prevent leaching into the underlying soil or onto surrounding areas. Let concrete harden and dispose of as garbage.
- ❑ When washing exposed aggregate, prevent washwater from entering storm drains. Block any inlets and vacuum gutters, hose washwater onto dirt areas, or drain onto a bermed surface to be pumped and disposed of properly.

Landscaping

- ❑ Protect stockpiled landscaping materials from wind and rain by storing them under tarps all year-round.
- ❑ Stack bagged material on pallets and under cover.
- ❑ Discontinue application of any erodible landscape material within 2 days before a forecast rain event or during wet weather.

Painting & Paint Removal

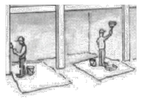

Painting Cleanup and Removal
- ❑ Never clean brushes or rinse paint containers into a street, gutter, storm drain, or stream.
- ❑ For water-based paints, paint out brushes to the extent possible, and rinse into a drain that goes to the sanitary sewer. Never pour paint down a storm drain.
- ❑ For oil-based paints, paint out brushes to the extent possible and clean with thinner or solvent in a proper container. Filter and reuse thinners and solvents. Dispose of excess liquids as hazardous waste.
- ❑ Paint chips and dust from non-hazardous dry stripping and sand blasting may be swept up or collected in plastic drop cloths and disposed of as trash.
- ❑ Chemical paint stripping residue and chips and dust from marine paints or paints containing lead, mercury, or tributyltin must be disposed of as hazardous waste. Lead based paint removal requires a state-certified contractor.

Dewatering

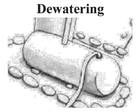

- ❑ Discharges of groundwater or captured runoff from dewatering operations must be properly managed and disposed. When possible send dewatering discharge to landscaped area or sanitary sewer. If discharging to the sanitary sewer call your local wastewater treatment plant.
- ❑ Divert run-on water from offsite away from all disturbed areas.
- ❑ When dewatering, notify and obtain approval from the local municipality before discharging water to a street gutter or storm drain. Filtration or diversion through a basin, tank, or sediment trap may be required.
- ❑ In areas of known or suspected contamination, call your local agency to determine whether the ground water must be tested. Pumped groundwater may need to be collected and hauled off-site for treatment and proper disposal.

Storm drain polluters may be liable for fines of up to $10,000 per day!

This document is for plan review only

Not for permitting or construction

PBK

ARCHITECT PBK Architects, Inc.
PBK.com
SAN LUIS OBISPO
1327 Archer Street, Suite 110
San Luis Obispo, CA 93401
805-229-3076

FIRE STATION #44
COASTSIDE FIRE PROTECTION DISTRICT

501 STETSON STREET
MOSS BEACH, CA 94038

BID SET

COASTSIDE FIRE PROTECTION DISTRICT EST 2002

BID SET

KEY PLAN

PLAN NORTH TRUE NORTH

REGISTERED PROFESSIONAL ENGINEER MARSHALL T. SWIFT No. C47939 CIVIL STATE OF CALIFORNIA

CLIENT	
COASTSIDE FIRE PROTECTION DISTRICT	
PROJECT NUMBER	230137
DATE	9/17/2026
DRAWN BY: BS	CHKED BY: MS

REVISIONS

#	DESCRIPTION	DATE

EROSION CONTROL

C8

A3.1 - REFLECTED CEILING PLAN

WELDING
001200-0006

1. WELDING PROCEDURES, ELECTRODES AND WELDER QUALIFICATIONS SHALL CONFORM TO AWS AND AISC REQUIREMENTS.
2. ALL WELDERS SHALL HAVE EVIDENCE OF PASSING THE AWS STANDARD QUALIFICATION TESTS, AND SHALL BE CERTIFIED FOR THE WORK THEY ARE PERFORMING.
3. PROJECT WELDING SHALL BE PERFORMED ONLY IN ACCORDANCE WITH WELDING PROCEDURE SPECIFICATIONS (WPS) SUBMITTED BY THE CONTRACTOR AND REVIEWED BY THE EOR AND PROJECT WELDING INSPECTOR. THE WPS SHALL BE IN ACCORDANCE WITH THE APPLICABLE AWS.
4. WELDING OF STRUCTURAL STEEL SHALL BE PERFORMED PER AWS D1.1 USING E70XX ELECTRODES UNLESS OTHERWISE NOTED.
5. ALL FULL PENETRATION WELDS SHALL BE ULTRA-SONIC TESTED PER AWS D1.1 AND D1.8 REQUIREMENTS AS APPLICABLE.
6. ALL GROOVE OR BUTT WELDS SHALL BE COMPLETE PENETRATION WELDS, UNO. ALL EXPOSED BUTT WELDS SHALL BE GROUND SMOOTH.
7. ALL EXPOSED WELDS ON ARCHITECTURALLY EXPOSED STRUCTURAL STEEL (AESS) SHALL COMPLY WITH AISC CODE OF STANDARD PRACTICE, SECTION 10.
8. FIELD WELDS HAVE BEEN INDICATED WHERE THEY ARE EXPECTED TO OCCUR. THE CONTRACTOR SHALL DETERMINE THE ACTUAL FIELD WELDING NECESSARY TO COMPLETE THE PROJECT AND INCLUDE ALL ASSOCIATED COSTS WITHIN THE BASE BID.
9. ALL SPECIFIED FILLET WELD SIZES ARE MINIMUM SIZES. INCREASE WELDS TO AISC MINIMUM SIZES BASED ON THICKNESSES OF MATERIALS JOINED.
10. PROVIDE SPECIAL INSPECTION BY APPROVED DEPUTY INSPECTOR FOR ALL FIELD WELDS.

SHOTCRETE
03915-0000-0004

1. SHOTCRETING SHALL CONFORM TO ALL REQUIREMENTS OF ACI 506, EXCEPT AS MODIFIED BY THE FOLLOWING REQUIREMENTS: APPLICATORS OF STRUCTURAL WET MIX SHOTCRETE SHALL HAVE A COPY OF ACI 506 ON EACH WORK SITE AT THE TIME OF SHOTCRETING. THE WORD "SHALL" SHALL BE SUBSTITUTED WHENEVER THE WORD "SHOULD" OCCURS IN ACI 506. THE CONCRETE MIX SHALL COMPLY WITH CBC SECTION 1905A.3 AND SHALL NOT BE BATCHED VOLUMETRICALLY. A TEST CONSISTING OF AT LEAST TWO CYLINDERS AT 28 DAYS SHALL ALSO BE REQUIRED. ALL OTHER APPLICABLE REQUIREMENTS OF THE CODE (INCLUDING ALL REQUIREMENTS FOR PNEUMATICALLY PLACED WET MIXED MORTAR) SHALL APPLY, INCLUDING MAXIMUM TIME-IN MIXER.
2. SHOTCRETE MIX DESIGN AND TESTING SHALL COMPLY WITH ACI 506.2 AND CONCRETE NOTES.
3. STRUCTURAL WET MIX SHOTCRETE SHALL NOT BE PLACED WHERE THE STREAM FROM THE NOZZLE CANNOT DIRECTLY IMPINGE ON THE SURFACE ON WHICH THE CONCRETE IS TO BE PLACED. WHERE THE CONDITION PREC LUDES THE POSSIBILITY OF OBTAINING CORES FROM THE STRUCTURE, THIS METHOD SHALL NOT BE USED.
4. SHOTCRETE CONTRACTOR SHALL SHOW A MINIMUM OF 5 YEARS EXPERIENCE ON SIMILAR SEISMIC BUILDING PROJECTS AND SHALL BE APPROVED BY THE STRUCTURAL ENGINEER. ONLY A QUALIFIED PERSON ON THE NOZZLE WITH A MINIMUM OF THREE YEARS STRUCTURAL WET MIX SHOTCRETE EXPERIENCE AND POSSESSING WRITTEN DOCUMENTATION OF THAT EXPERIENCE SHALL APPLY WET MIX SHOTCRETE. THE WET MIX SHOTCRETE SUPERVISOR AND THE PERSON AT THE NOZZLE SHALL PROVIDE A RESUME APPROVED BY THE DEPARTMENT PRIOR TO PLACING. THE SUBCONTRACTOR WHO WILL PLACE THE SHOTCRETE SHALL SUPPLY A WRITTEN RESUME OF HISHER EXPERIENCE IN THE PLACING OF STRUCTURAL SHOTCRETE (OTHER THAN SWIMMING POOLS) AND LOCATIONS OF PREVIOUS JOBS APPROVED BY THE DEPARTMENT.
5. THE MINIMUM SPACING OF THE REINFORCING STEEL SHALL BE SIX BAR DIAMETERS FOR WALLS WITH ONE CURTAIN OF STEEL. WHERE TWO CURTAINS OF STEEL ARE PROVIDED, THE CURTAIN NEAREST THE NOZZLE SHALL HAVE A MINIMUM SPACING OF 12 BAR DIAMETERS AND THE REMAINING CURTAIN SHALL HAVE A MINIMUM SPACING OF SIX BAR DIAMETERS. REINFORCING STEEL SHALL HAVE A MINIMUM SPACING OF THREE BAR DIAMETERS AT SPLICES. IN ALL CASES, THE MINIMUM CLEAR DISTANCE BETWEEN REINFORCING BARS (OTHER THAN MESH) SHALL BE 2 1/2". EXCEPTION: CONTACT SPLICES MAY BE USED FOR NO. 5 BARS AND SMALLER.
6. CONTINUOUS INSPECTION BY A REGISTERED DEPUTY BUILDING INSPECTOR IS REQUIRED DURING PLACEMENT OF SHOTCRETE AND TAKING OF CORES.
7. EACH TEAM OF THE PERSON AT THE NOZZLE AND THE HELPER SHALL SHOOT A TEST PANEL OF THE THICKNESS AND WITH TYPICAL REINFORCING STEEL PATTERN USING EACH SHOOTING POSITION BEFORE COMMENCING ANY WET MIX SHOTCRETING WORK ON THE BUILDING. THE DEPUTY BUILDING INSPECTOR SHALL WITNESS THE ASSEMBLY, REINFORCING, SHOOTING AND DISASSEMBLY OF THE TEST. THE PANEL SHALL BE AT LEAST 4'x4'. AFTER SHOOTING, BUT BEFORE THE CONCRETE HAS FULLY SET, THE PANEL SHALL BE DISASSEMBLED TO ASSURE THAT THE TEAM AND EQUIPMENT TO BE USED IS CAPABLE OF PROVIDING SOUND CONCRETE BEHIND REINFORCING STEEL. THE PANEL SHALL BE FREE OF VOIDS, SAGS, ETC. APPLICATION OF STRUCTURAL WET MIX SHOTCRETE IN THE FINISHED WORK SHALL NOT PROCEED UNTIL THE TEST PANEL HAS BEEN SHOT, DISASSEMBLED, INSPECTED AND APPROVED BY THE DEPARTMENT. EXCEPTION: WHEN THE PERSON AT THE NOZZLE AND HIS/HER HELPER TEAM HAS PREVIOUSLY SUCCESSFULLY SHOT A TEST PANEL UNDER THE JURISDICTION OF THE DEPARTMENT, THE BUILDING INSPECTOR MAY ALLOW APPLICATION OF WET MIX SHOTCRETE TO PROCEED ON THE STRUCTURE PRIOR TO DISASSEMBLING THE TEST PANEL. IF ANY DEFECTS ARE FOUND IN THE TEST PANEL WHICH WOULD INDICATE THE POSSIBILITY OF STRUCTURAL FAILURE, WORK SHALL BE STOPPED IMMEDIATELY AND ALL STRUCTURAL WET MIX SHOTCRETE PLACED WHILE WAITING THE DISASSEMBLY OF THE PANEL SHALL BE REMOVED.
8. TESTING SHALL CONSIST OF FOUR-INCH OR LARGER DIAMETER CORES CUT FROM THE FULL DEPTH OF THE WALL, WITH A MINIMUM OF ONE CORE FOR EACH 1000 SQUARE FEET OF WALL AND A MINIMUM OF TWO CORES FOR EACH DAY'S APPLICATION BY ANY ONE NOZZLE TEAM. CORES MUST BE FREE OF VOIDS AND REBOUND. CORE LOCATIONS SHALL BE SELECTED BY THE BUILDING DEPARTMENT WITH APPROVAL BY THE SEOR. ALL CORES SHALL BE CUT WITHIN TWO TO FIVE CALENDAR DAYS OF PLACEMENT OF THE CONCRETE, SHALL BE VISUALLY INSPECTED ON THE JOBSITE BY THE DEPUTY INSPECTOR AND REPLACED INTO THE HOLES FROM WHICH THEY WERE CUT. THE SURFACE AT THE CORES SHALL BE SEALED TO PREVENT HYDRATION AND SHALL BE MARKED TO AID IN IDENTIFICATION OF THE CORE FOR TESTING AT 28-DAY AGE. THE CORES SHALL BE TESTED IN ACCORDANCE WITH ASTM C42. THE CORES SHALL BE TESTED IN THE CONDITION THEY WERE REMOVED FROM THE WALL WITH NO FURTHER CURING ALLOWED. VERIFICATION OF THE FIELD INSPECTION SHALL BE REPORTED TO THE DEPARTMENT IMMEDIATELY BY THE DEPUTY INSPECTOR.
9. DETAILS OF COLD JOINTS, INCLUDING SLOPE OF JOINTS, SHALL BE PLACED ON THE APPROVED PLANS AND BE APPROVED WITH THE SIGNATURE OF THE DESIGN ENGINEER. WHEN SHOOTING UP TO UNDERSIDE OF EXISTING CONCRETE, THE LAST TWO INCHES SHALL BE DRY PACKED OR AN APPROVED METHOD OF DRY PNEUMATIC CONCRETE USED. EXCEPTION: PROVIDED THE DETAIL OF THE JOINT IS SLOPED SO THAT THE CLOSURE OF THE COLD JOINT MADE WITH STRUCTURAL WET MIX SHOTCRETE DOES NOT SAG AWAY FROM THE UPPER SURFACE AND PROVIDED BOTH SIDES OF THE COLD JOINT HAVE TAKEN THEIR INITIAL SET, THE JOINT CLOSURE MAY BE MADE WITH STRUCTURAL WET MIX SHOTCRETE.
10. REINFORCING STEEL WILL BE SECURELY TIED IN PLACE IN A MANNER THAT PREVENTS ANY MOVEMENT DURING THE WET MIX SHOTCRETING.
11. THE HEIGHT OF A LAYER SHALL BE LIMITED TO NOT MORE THAN THREE FEET AND A SUCCEEDING LAYER SHALL NOT BE PLACED IN LESS THAN THREE HOURS. NO SLOUGHING OR SAGGING SHALL BE PERMITTED. EXCEPTION: (A) A SEOR MAY AUTHORIZE A SUCCEEDING LAYER TO BE PLACED IN LESS THAN THREE HOURS. NO SLOUGHING OR SAGGING SHALL BE PERMITTED. (B) A CONCRETE MIX DESIGN UNDER SECTION 1905A.3 BY A LICENSED CIVIL ENGINEER MAY BE RECOMMENDED AND APPROVED BY THE SEOR FOR LESS THAN THREE HOURS BETWEEN LIFTS, BUT NOT LESS THAN TWO HOURS BETWEEN LIFTS, BASED ON THE MIX DESIGN, CLIMATE CONDITIONS AND JOB CONDITIONS. THE RECOMMENDED LESSER TIME MAY BE USED ON THE JOB WHEN APPROVED BY THE STRUCTURAL ENGINEER.
12. THE MINIMUM SLUMP SHALL BE 1 1/2" AND THE MAXIMUM SHALL BE 2 1/2". SLUMP SHALL BE MEASURED AT THE POINT OF DISCHARGE FROM THE MIXER, EXCEPT THE BUILDING INSPECTOR MAY REQUIRE SLUMP TESTS AT THE DISCHARGE POINT WHERE WATER MAY HAVE BEEN ADDED.
13. A CAPABLE NOZZLEPERSON'S HELPER WITH AN AIR BLOW PIPE SHALL BE PROVIDED TO ASSIST THE NOZZLEPERSON IN KEEPING ALL REBOUND BUILD-UP OUT OF THE WORK.
14. ADDITIONAL WORKERS MAY BE REQUIRED TO TAKE REBOUND FROM THE WORK IF THE REBOUND CANNOT BE REMOVED BY THE AIR BLOW PIPE.
15. SHOTCRETE PLACEMENT OVER EARTH:
    a. RIGID BACKING: PRIOR TO SHOTCRETE APPLICATION, PLACE RIGID OR OTHER APPROVED BACKING AGAINST EARTH WHERE THERE IS ANY LIKEHOOD OF SOIL BEING DISLODGED IN SUFFICIENT QUANTITY TO DAMAGE SHOTCRETE. ALSO, PLACE BACKING WHERE VOIDS IN EMBANKMENT ARE TO BE BRIDGED.
    b. SLOUGHING EARTH: IF PREVIOUSLY PRESUMED SOLID EMBANKMENT SHOULD SLOUGH DIRT IN SUFFICIENT QUANTITY TO DAMAGE SHOTCRETE, DISCONTINUE SHOTCRETE PLACEMENT WORK IN THAT AREA UNTIL A RIGID BACKING IS INSTALLED AND CONTAMINATED SHOTCRETE IS REMOVED.
16. REMOVE LOOSE MATERIAL FROM SURFACE TO RECEIVE SHOTCRETE AND THOROUGHLY CLEAN AND WASH DOWN WITH WATER AND COMPRESSED AIR SURFACES. CONCRETE SURFACES SHALL BE THOROUGHLY WETTED PRIOR TO APPLICATION OF SHOTCRETE.
17. NO KEYWAYS OR EMBEDMENTS SHALL BE PLACED IN FRONT FACE THAT WILL INTERFERE WITH THE STREAM FROM THE NOZZLE.
18. THE CONTRACTOR SHALL PROVIDE A DESIGNATED LIAISON BETWEEN HIS/HER CREW, THE DEPUTY INSPECTOR AND THE BUILDING INSPECTOR.
19. THE DEPUTY INSPECTOR SHALL BE INTERVIEWED AND APPROVED BY DEPARTMENT REPRESENTATIVES PRIOR TO INSPECTING THE WORK AT THE JOBSITE. AND ONE DEPUTY SHALL BE ASSIGNED TO EACH NOZZLE.
20. REMOVE REBOUND AND DO NOT REUSE. CUT AWAY LAITANCE, SAGS, AND DEFECTS.

PROTECTIVE COATING FOR PERMANENT SOLDIER BEAMS

1. PROTECTIVE COATING SHALL BE CARBOLINE "CARBOGUARD 890 VOC".
2. APPLY COATING TO LENGTH OF SOLDIER BEAMS AS SPECIFIED ON DRAWINGS. CARBOGUARD 890 VOC SHALL BE AVAILABLE AT JOB SITE FOR TOUCH-UPS TO COVER AREAS WHERE WELDING, NICKS OR SCRATCHES HAS OCCURRED.

SOLDIER PILE SHAFTS

1. VERTICAL SHAFTS ARE TO BE MACHINE DRILLED AND ACCURATELY LOCATED. LOCATION SHALL BE COORDINATED WITH ARCHITECTURAL DRAWINGS.

2. LOCATE SOLDIER PILES AS REQUIRED OUTSIDE OF BUILDING WALLS TO INSURE PILE DOES NOT INTRUDE INTO FINISHED WALL DUE TO OUT OF PLUMB OR VARIATION IN PLAN LOCATION.

3. IT WILL NOT BE NECESSARY TO DEWATER THE HOLES FOR SOLDIER PILES OR TIEBACKS IF SPECIFIED SHOULD GROUNDWATER BE ENCOUNTERED PROVIDED THE CONCRETE IS TREMIED INTO POSITION WITH APPROVED DEVICES.

4. SHAFTS CLOSER THAN TWO SHAFT DIAMETERS ON CENTER SHALL BE DRILLED AND POURED IN AN ALTERNATING SEQUENCE SUCH THAT THE ALTERNATE SHAFT IS NOT DRILLED UNTIL THE ADJACENT PILE HAS CURED FOR AT LEAST 24 HOURS.

5. PROVIDE PROTECTION OF SHAFT AGAINST SLOUGHING OR CAVING, AS REQUIRED.

6. WHERE CAVING OCCURS, DRILLED HOLES SHALL BE CASED AND ALL BACKFILL SHALL BE PRESSURE PUMPED SO THAT ALL VOIDS ARE FILLED.

7. ALL SHAFTS LEFT OPEN MORE THAN TWELVE (12) HOURS SHALL BE CASED.

8. WHEN WATER OVER 3 INCHES IN DEPTH IS PRESENT IN DRILLED PILE HOLES, A CONCRETE MIX WITH A STRENGTH OF 1000 PSI OVER THE DESIGN PSI SHALL BE TREMIED FROM THE BOTTOM UP.

9. SHAFTS SHALL NOT BE DRILLED ADJACENTLY. A MINIMUM 2-PHASE SEQUENCE IS REQUIRED UNLESS OTHERWISE DIRECTED BY THE GEOTECHNICAL ENGINEER.

10. DRILLED SHAFTS ARE NOT PERMITTED TO BE LEFT OPEN OVER-NIGHT.

SHORING PROCEDURE - DRILLED

1. DRILL VERTICAL SOLDIER PILE SHAFT.
2. PLACE SOLDIER BEAMS IN SHAFT.
3. FILL THE TOE OF THE SOLDIER PILE SHAFT CONCRETE. FILL BALANCE OF SHAFT WITH A SAND/CEMENT SLURRY. PERORM ABOVE STEPS FOR BALANCE OF SOLDIER PILES.
4. BEGIN EXCAVATION IN LIFTS AS MAY BE DETERMINED BY THE DEPUTY GRADING INSPECTOR. CLEAN SOLDIER PILES AS REQUIRED. PLACE WOOD LAGGING AS GRADE DESCENDS. PROVIDE SLURRY BEHIND LAGGING IN AREAS OF CAVING. OTHERWISE BACKFILL WITH GRANULAR MATERIAL.
5. COMPLETE EXCAVATION.

SLURRY

1. CEMENT SHALL BE ASTM C-150 TYPE II/V.
2. SLURRY SHALL CONTAIN 1 1/2 SACKS (141 LBS) OF CEMENT PER CUBIC YARD OF SAND.
3. SAND SHALL CONFORM TO ASTM C-33.

PLASTIC SHEATHING

1. SHEATHING SHALL BE SMOOTH POLYETHYLENE CONFORMING TO ASTM D-1248
2. TAPE ENDS OF SHEATHING WITH TAPE TO PREVENT INTRUSION OF GROUT.

INSTALLATION TOLERANCES:

THE FOLLOWING IS A GENERAL GUIDELINE OF THE INSTALLATION TOLERANCE. THE ALLOWANCE/CONTRACTED TOLERANCES SHALL BE CONFIRMED WITH THE GENERAL CONTRACTOR.

1. SOLDIER BEAMS:
   - TOPS OF SOLDIER BEAM SHALL BE WITHIN 2" ± HORIZONTALLY OF THE LOCATIONS SHOWN ON THE PLANS.
   - SOLDIER BEAM SHALL NOT ENCROACH MORE THAN 1" INTO THE EXCAVATION.
   - SOLDIER BEAM SHALL BE INSTALLED PLUMB TO WITHIN 0.5% OF RETAINED HEIGHT (2" MAX).

SOLDIER BEAM & SURVEY MONITORING (DURING CONSTRUCTION)

1. SOLDIER BEAM SURVEY MONITORING SHALL BE CONDUCTED ON PERIODIC BASIS UNTIL THE PERMANENT RETENTION STRUCTURE IS CAPABLE OF SUPPORTING THE IMPOSED LATERAL LOADS.
2. A PHOTOGRAPHIC/VIDEO SURVEY OF THE ADJACENT STREETS AND STRUCTURES SHOULD BE PERFORMED ESTABLISH THE PRE-EXCAVATION BASE-LINE CONDITIONS. PRIOR TO ANY EXCAVATION, SURVEY MONITORING CONTROL POINTS AND INITIAL SOLDIER BEAMS OFFSETS SHALL BE ESTABLISHED TO MONITOR THE HORIZONTAL AND VERTICAL MOVEMENT OF THE SOLDIER BEAMS AND ADJACENT STRUCTURES.
3. CONTROL POINTS, INITIAL SOLDIER BEAM OFFSETS AND MONITORING PERFORMANCE OF COMPONENTS OF TIEBACK ANCHOR SYSTEM FOR VERTICAL AND HORIZONTAL MOVEMENT SHALL BE ESTABLISH WEEKLY BY A LICENSED SURVEY UNDER THE DIRECTION AND TO THE SATISFACTION OF THE GEOTECHNICAL ENGINEER. THE MONITORING SHALL CONSIST OF READING OF THE VERTICAL AND LATERAL MOVEMENT OF THE SHORING WALL. THE "LEAST COUNT" (ACCURACY) OF THE SOLDIER PILE TOP LATERAL DEFLECTION SURVEY SHALL ± 1/16" (0.0625 INCH).
4. INITIAL READINGS SHALL BE PERFORMED PRIOR TO ANY EXCAVATION.
5. INITIAL AND PERIODIC SOLDIER BEAM READINGS SHALL BE SUBMITTED TO THE GENERAL CONTRACTOR, SHORING SUB-CONTRACTOR, ENGINEER AND GEOTECHNICAL ENGINEER.
6. MONITORING READINGS SHALL BE SUBMITTED WITH IN 3 WORKING DAYS AFTER THEY ARE CONDUCTED. ADDITIONAL READING SHALL BE OBTAINED WHEN REQUESTED.
7. CONTROL POINTS SHALL BE ESTABLISH OUTSIDE THE AREA OF INFLUENCE OF THE SHORING SYSTEMS TO ENSURE THE ACCURACY OF THE MONITORING READINGS.
8. IF ANY HORIZONTAL OR VERTICAL MOVEMENT OF THE SOLDIER BEAMS REACHES STATED LIMITS AS SPECIFIED IN MONITORINGINSTRUMENTATION SUMMARY, THE GEOTECHNICAL ENGINEER AND ENGINEER SHALL EVALUATE SUCH MOVEMENTS AND RECOMMEND CORRECTIVE MEASURES, IF NECESSARY, BEFORE EXCAVATION CONTINUES.
9. SURVEY POINTS SHALL BE ESTABLISHED AT THE LOCATION INDICATED IN THE GEOTECHNICAL INSTRUMENTATION AND MONITORING PLAN REPORT BY THE PROJECT CIVIL ENGINEER.

REINFORCING STEEL
032000-0000

1. REINFORCING GRADES FOR CONCRETE AND MASONRY:

ALL BARS UNLESS NOTED OTHERWISE	ASTM A615 OR A706, GRADE 60
TIES AND STIRRUPS	ASTM A615 OR A706, GRADE 60
WELDED WIRE FABRIC	ASTM A1064
ALL BARS TO BE WELDED	ASTM A706, GRADE 60

2. ALL BARS SHALL BE DEFORMED.
3. MAINTAIN CONCRETE COVER FROM FACE OF CONCRETE TO EDGE OF ALL REINFORCEMENT AS FOLLOWS (UNO). THE INTENT IS FOR REINFORCEMENT TO BE PLACED SO THAT IT IS AS CLOSE TO CONCRETE SURFACES AS POSSIBLE. WITHIN SPECIFIED TOLERANCES, WHILE MAINTAINING THIS MINIMUM PROTECTION. PROVIDE THE LARGEST COVER REQUIRED FOR ALL APPLICABLE CONDITIONS. WHERE #3 STIRRUPS OR TIES ARE USED, ENSURE THAT THE COVER FOR LONGITUDINAL BARS IS ADEQUATE.

CONDITION	COVER
CAST AGAINST AND PERMANENTLY EXPOSED TO EARTH	3"
FORMED AND EXPOSED TO EARTH OR WEATHER	
#6 BARS AND LARGER	2"
#5 BARS AND SMALLER	1 1/2"
UNEXPOSED RAISED SLABS AND WALL FACES (#11 BARS AND SMALLER)	3/4"
UNEXPOSED COLUMNS AND BEAMS	1 1/2"
STRUCTURAL SLABS ON GRADE	
FROM BOTTOM OF SLAB	2"
FROM TOP OF SLAB	1 1/2"
OTHER CONCRETE NOT EXPOSED TO EARTH OR WEATHER (#11 BARS AND SMALLER)	3/4"

4. "CLEAR" OR "CLR" INDICATES DISTANCE BETWEEN SURFACES AND DOES NOT INDICATE MINIMUM UNLESS SPECIFICALLY NOTED AS SUCH. CLEAR DISTANCES ARE SUBJECT TO TOLERANCES PER CRSI.
5. REINFORCEMENT SHALL BE PLACED IN ACCORDANCE WITH THE CONCRETE REINFORCING STEEL INSTITUTE (CRSI) "MANUAL OF STANDARD PRACTICE". EACH REINFORCING BAR SHALL BE WIRED TO A CROSS BAR AT A MAXIMUM SPACING OF 24"OC. PROVIDE ALL ACCESSORIES NECESSARY TO SUPPORT REINFORCING IN POSITIONS SHOWN ON THE PLANS. DO NOT USE WOOD OR BRICK TO SUPPORT REINFORCING.
6. SPLICES IN CONTINUOUS REINFORCEMENT IN WALLS, FOOTINGS, ETC. SHALL HAVE A CLASS "B" LAP (1'-6" MIN) AND THE SPLICES IN ADJACENT BARS SHALL BE NOT LESS THAN 5'-0" APART. VERTICAL WALL BARS SHALL BE SPLICED AT OR NEAR FLOOR LINES. BARS MAY BE WIRED TOGETHER AT SPLICES OR LAPS EXCEPT FOR TOP REINFORCING OF BEAMS AND SLABS OR WHERE SPECIFICALLY DETAILED TO BE SEPARATED. WELDED WIRE FABRIC SHALL BE LAPPED 12" MINIMUM.
7. ALL DOWELS, ANCHOR BOLTS AND OTHER HARDWARE TO BE SET IN CONCRETE SHALL BE TIED IN PLACE PRIOR TO PLACEMENT OF CONCRETE. NO WET SETTING, STABBING, RODDING OR OTHER MOVEMENT OF EMBEDDED ITEMS SHALL BE PERFORMED DURING PLACEMENT OF CONCRETE.
8. BEND REINFORCING BARS COLD. BARS MAY ONLY BE BENT ONCE.
9. REINFORCEMENT SHALL BE FREE FROM MUD, OIL, DIRT, LOOSE RUST, MORTAR, PAINT, GREASE AND OTHER NON-METALLIC AGENTS THAT REDUCE BOND CAPACITY. BONDED RUST OR MILL SCALE IS ACCEPTABLE PROVIDED THE MINIMUM CROSS-SECTIONAL AREA (INCULDING HEIGHT OF DEFORMATIONS) AND WEIGHT ARE MAINTAINED.
10. DOWELS BETWEEN FOOTING AND WALLS OR COLUMNS SHALL BE THE SAME GRADE, SIZE AND SPACING AS THE MAIN REINFORCING UNO.
11. ALL BARS SHALL BE MARKED SO THEIR IDENTIFICATION CAN BE MADE DURING INSPECTION.
12. CHAIRS OR SPACERS FOR REINFORCING SHALL BE PLASTIC WHEN RESTING ON EXPOSED SURFACES.
13. WHERE LONGITUDINAL REINFORCING BARS ARE PLACED IN 2 OR MORE LAYERS, BARS IN THE UPPER LAYERS SHALL BE PLACED DIRECTLY ABOVE BARS IN THE BOTTOM LAYER.
14. ALL BENDS WITHIN STIRRUPS, HOOPS, AND CROSS-TIES SHALL ENGAGE A LONGITUDINAL BAR. PROVIDE #4 SPACER BAR WHERE A LONGITUDINAL BAR IS NOT SPECIFICALLY DETAILED.
15. MECHANICAL BAR SPLICES (COUPLERS) MAY BE USED AT CONTRACTOR'S OPTION IN LIEU OF LAP SPLICES AND WHERE REBAR IS SHOWN CONTINUOUS THROUGH JOINTS. UNLESS NOTED OTHERWISE, ALL MECHANICAL BAR SPLICES SHALL BE "TYPE 2" AS DEFINED IN ACI 318 AND AS LISTED IN THE PRODUCT SCHEDULE, AND SHALL BE INSTALLED PER MANUFACTURER'S RECOMMENDATIONS.
16. MECHANICAL HEADED END ANCHORS MAY BE USED AT CONTRACTOR'S OPTION IN LIEU OF STANDARD 90 DEGREE HOOKS AS LISTED IN THE PRODUCT SCHEDULE, AND SHALL BE INSTALLED PER MANUFACTURER'S RECOMMENDATIONS. PROVIDE REINFORCING HEADED END ANCHORS WHERE CONGESTION DOES NOT ALLOW HOOKED REBAR INSTALLATION.
17. WELDING OF REINFORCING BARS SHALL BE PERFORMED PER AMERICAN WELDING SOCIETY (AWS) D1.4 USING E90XX ELECTRODES FOR A615 REINFORCING AND E80XX ELECTRODES FOR A706 REINFORCING.

STRUCTURAL STEEL
05120-0000

1. DESIGN, FABRICATION AND ERECTION OF STRUCTURAL STEEL SHALL CONFORM TO THE SPECIFICATIONS AND STANDARDS OF THE AMERICAN INSTITUTE OF STEEL CONSTRUCTION (AISC) AS CONTAINED IN THE "AISC MANUAL OF STEEL CONSTRUCTION". ALL WORK SHALL BE IN CONFORMANCE WITH THE TESTING, INSPECTION, QUALIFICATION, AND QUALITY ASSURANCE PROVISIONS AS REQUIRED BY THE BUILDING CODE AND ANY APPLICABLE STANDARDS. THESE STANDARDS INCLUDE, BUT ARE NOT LIMITED TO, THE FOLLOWING: AISC 360 "SPECIFICATION FOR STRUCTURAL STEEL BUILDINGS", AISC 303 "CODE OF STANDARD PRACTICE FOR STEEL BUILDINGS AND BRIDGES", AISC 341 "SEISMIC PROVISIONS FOR STRUCTURAL STEEL BUILDINGS", AWS D1.1 "STRUCTURAL WELDING CODE - STEEL", AWS D1.8 "STRUCTURAL WELDING CODE - SEISMIC SUPPLEMENT", AND RCSC "SPECIFICATION FOR STRUCTURAL JOINTS USING HIGH-STRENGTH BOLTS". CONFORMANCE TO SUPPLEMENTS TO THESE STANDARDS, IF PUBLISHED ON OR BEFORE THE DATE OF PERMIT ISSUANCE, IS ALSO REQUIRED. ALTHOUGH THESE CONTRACT DOCUMENTS INCLUDE GENERAL REFERENCES TO CODES AND STANDARDS, AND REFERENCES TO OR INCLUSIONS OF SPECIFIED PROVISIONS, OMISSIONS OF ANY APPLICABLE CODE, STANDARD, OR PROVISION DOES NOT RELIEVE THE GENERAL CONTRACTOR FROM COMPLIANCE TO THE APPLICABLE REQUIREMENTS. COORDINATION OF QUALITY CONTROL AND QUALITY ASSURANCE IS THE RESPONSIBILITY OF THE GENERAL CONTRACTOR.
2. ALL STRUCTURAL STEEL SHALL BE ERECTED PLUMB AND TRUE TO LINE. TEMPORARY BRACING SHALL BE INSTALLED AND SHALL BE LEFT IN PLACE UNTIL OTHER MEANS IS PROVIDED TO ADEQUATELY BRACE THE STRUCTURE.
3. STRUCTURAL STEEL MATERIALS/GRADES, UNO:

SHAPE	MATERIAL/GRADE
WIDE FLANGE & TEES	ASTM A992
PLATES, ANGLES, CHANNELS, THREADED RODS (UNO)	ASTM A36
HIGH-STRENGTH PLATE	ASTM A572, GRADE 50
MACHINE BOLTS (MB)	ASTM A307
WELDED HEADED STUDS	ASTM A108
THREADED RODS FOR ANCHOR BOLTS	ASTM F1554, GRADE 55

   a. EXCEPT AS OTHERWISE NOTED, ALL BOLTS SHALL BE HIGH-STRENGTH BOLTS.
   b. WHERE WELDING TO GRADE 55 THREADED ANCHOR RODS IS REQUIRED, USE ASTM F1554 GRADE 55 WITH SUPPLEMENT S1.
4. ALL CONNECTIONS NOT SHOWN SHALL CONFORM TO THE "AISC MANUAL OF STEEL CONSTRUCTION" AND SHALL BE SUBMITTED ON SHOP DRAWINGS FOR REVIEW BY SEOR PRIOR TO FABRICATION.
5. ALL WELDED HEADED STUDS, THREADED STUDS, AND DEFORMED BARS SHALL BE NELSON, OR EQUIVALENT, AND WELDED IN ACCORDANCE WITH MANUFACTURER'S RECOMMENDATIONS BY CERTIFIED WELDERS SO AS TO FULLY DEVELOP THE TENSILE CAPACITY OF THE CONNECTOR.
6. ALL STEEL FABRICATION SHALL BE PERFORMED BY A LICENSED FABRICATOR.
7. ALL STRUCTURAL STEEL AND MISCELLANEOUS STEEL PERMANENTLY EXPOSED TO THE ELEMENTS SHALL BE HOT DIP GALVANIZED AFTER FABRICATION UNLESS A WEATHERPROOF COATING IS SPECIFIED BY THE ARCHITECT, UNO. STAINLESS AND WEATHERING STEELS, WHERE SPECIFIED, ARE EXEMPT FROM THIS REQUIREMENT. GALVANIZED SURFACES SHALL BE PROTECTED DURING CONSTRUCTION AND SHALL BE REPAIRED AS NECESSARY. ALL ARCHITECTURALLY EXPOSED STRUCTURAL STEEL (AESS) SHALL COMPLY WITH AISC CODE OF STANDARD PRACTICE, SECTION 10.
8. SEE ARCHITECTURAL DRAWINGS FOR NAILER HOLES, WELDED STUDS OR OTHER ITEMS NOT SHOWN IN THESE DRAWINGS.
9. WHERE STEEL IS EMBEDDED IN CONCRETE OR MASONRY, PROVIDE HOLES AS REQUIRED FOR PASSAGE OF CONTINUOUS REINFORCING BARS WHERE INDICATED ON DRAWINGS.
10. DO NOT CUT HOLES IN STRUCTURAL STEEL WITHOUT APPROVAL OF THE EOR.
11. PLACE NON-SHRINK OR DRYPACK GROUT UNDER ALL BASEPLATES AND ALLOW TO CURE UNTIL SPECIFIED STRENGTH IS REACHED BEFORE APPLYING LOADS.

GEOTECHNICAL PARAMETERS
032105-0001

1. SEE SOIL REPORT BY ..... GEOCON CONSULTANTS, INC.
   REPORT NO. E9371-04-01
   DATED ..... JANUARY, 2025
2. ALL GRADING, FOUNDATION, AND DRAINAGE PLANS SHALL BE REVIEWED BY THE GEOTECHNICAL ENGINEER UPON SUBMITTAL. GEOTECHNICAL ENGINEER WILL SIGN AND SEAL PLANS THAT THE RECOMMENDATIONS CONTAINED WITHIN THE SOILS REPORT CONFIRMING HAVE BEEN INCORPORATED INTO THE PROJECT PLANS AND SPECIFICATIONS PRIOR TO CONSTRUCTION.
3. THE CONTRACTOR SHALL CONFORM TO ALL RECOMMENDATIONS AND CONDITIONS INDICATED IN THE SOIL REPORT. THE GEOTECHNICAL ENGINEER SHALL OBSERVE ALL FOOTING EXCAVATIONS PRIOR TO PLACING CONCRETE.
4. SUBSURFACE SOIL PREPARATION:
   A. EXISTING UNDOCUMENTED FILL AND TOP SOILS SHALL BE REMOVED AND RECOMPACTED AS REQUIRED BY THE GEOTECHNICAL ENGINEER.
   B. GEOTECHNICAL ENGINEER SHALL BE RETAINED DURING THE OVEREXCAVATION PROCESS. THE ACTUAL DEPTH OF REMOVAL WILL BE DETERMINED DURING GRADING OPERATIONS.
   C. OFFSITE FILL MATERIAL SHALL BE APPROVED BY THE GEOTECHNICAL ENGINEER PRIOR TO PLACEMENT.
   D. ALL SHALLOW FOUNDATIONS SHALL BE SUPPORTED BY COMPETENT MARINE TERRACE DEPOSITS, COMPETENT ALLUVIAL DEPOSITS, OR PROPERLY COMPACTED STRUCTURAL FILL. FILL SHALL EXTEND 5 FEET LATERALLY FROM THE FOUNDATION WHERE NOT RESTRICTED BY PROPERTY BOUNDARIES.
5. PRIOR TO THE CONTRACTOR REQUESTING A BUILDING DEPARTMENT FOUNDATION INSPECTION, THE SOILS ENGINEER SHALL ADVISE THE BUILDING OFFICIAL IN WRITING THAT:
   A. THE BUILDING PAD WAS PREPARED IN ACCORDANCE WITH THE SOILS REPORT.
   B. THE UTILITY TRENCHES HAVE BEEN PROPERLY BACKFILLED AND COMPACTED.
   C. THE FOUNDATION EXCAVATIONS COMPLY WITH THE INTENT OF THE SOILS REPORT.
6. SPREAD FOOTINGS ARE CENTERED UNDER WALLS AND COLUMNS, UNO.
7. ALL TRENCHES SHALL COMPLY WITH APPLICABLE OSHA REQUIREMENTS. FOOTING BACKFILL AND UTILITY TRENCH BACKFILL WIT

A3.1 - REFLECTED CEILING PLAN

REFERENCE OF SECTIONS, DETAILS & SYMBOLS

010000-0004 (07/07/14)

DETAIL REFERENCE SHOWN THUS*:

2 / S5.01 **

DETAIL NOTED IS SHOWN ON SHEET S5.01, DETAIL 2

BUILDING SECTION INDICATION SHOWN THUS:

2 / S3.01 **

CUT IS SHOWN ON SHEET S3.01, DETAIL 2

ELEVATION INDICATION SHOWN THUS:

2 / S5.01 **

ELEVATION IS SHOWN ON SHEET S5.01, DETAIL 2

* (ADDITIONAL INDICATORS MAY BE USED TO SHOW LOCATION OF DETAIL CUTS)

** (SHEET NUMBER WILL BE REPLACED BY A HYPHEN (-) WHEN THE REFERENCED DETAIL APPEARS ON THE SAME SHEET AS THE CALL-OUT)

DETAIL TITLE SHOWN THUS:

2 DETAIL TITLE
SCALE

INDICATES THE TITLE, SCALE, AND DETAIL NUMBER ON SHEET

Ø = DIAMETER

= REFERENCE ELEVATION OR WORK POINT

ABBREVIATIONS

010000-0003 (06/06/17) (04/24/17)

ABV	ABOVE	ID	INSIDE DIAMETER
ADJ	ADJACENT	I.F.	INSIDE FACE
AFF	ABOVE FINISH FLOOR	IN	INCH
ALT	ALTERNATE	INT	INTERIOR
ARCH	ARCHITECTURAL)	IOR	INSPECTOR OF RECORD
BLDG	BUILDING	JT	JOINT
BLW	BELOW	KLF	KIPS PER LINEAR FOOT
B.O.	BOTTOM OF	KSF	KIPS PER SQUARE FOOT
BOTT	BOTTOM	KSI	KIPS PER SQUARE INCH
BRG	BEARING	L	ANGLE
BS	BOTH SIDES	LONG	LONGITUDINAL
BTWN	BETWEEN	LLH	LONG LEG HORIZONTAL
CIP	CAST IN PLACE	LLV	LONG LEG VERTICAL
CJ	CONTROL/CONSTRUCTION	MAX	MAXIMUM
JOINT		MIN	MINIMUM
CJP	COMPLETE JOINT PENETRATION	MSE	MECHANICALLY STABILIZED
CL	CENTERLINE	EARTH	
CLR	CLEAR	NTS	NOT TO SCALE
CONC	CONCRETE	NWC	NORMAL WEIGHT CONCRETE
CONN	CONNECTION	OC	ON CENTER
CP	COMPLETE PENETRATION	OD	OUTSIDE DIAMETER
CTR(D)	CENTER(ED)	O.F.	OUTSIDE FACE
D_b	BAR OR BOLT DIAMETER	PJP	PARTIAL JOINT PENETRATION
DET	DETAIL	PL	PLATE
DIA	DIAMETER	PLF	POUNDS PER LINEAR FOOT
DIAG	DIAGONAL	PSF	POUNDS PER SQUARE FOOT
DIM	DIMENSION	PSI	POUNDS PER SQUARE INCH
DWG	DRAWING	QTY	QUANTITY
(E)	EXISTING	RAD, R	RADIUS
EA	EACH	REF	REFERENCE
EF	EACH FACE	REINF	REINFORCING
EJ	EXPANSION JOINT	REQD	REQUIRED
EMBED	EMBEDMENT	SCHED	SCHEDULE
ELEV	ELEVATION OR ELEVATOR	SEOR	STRUCTURAL ENGINEER OF
EOR	ENGINEER OF RECORD	RECORD	
EQ	EQUAL	SIM	SIMILAR
ES	EACH SIDE OR EDGE SCREW	STD	STANDARD
EW	EACH WAY	STGRD	STAGGERED
FIN	FINISH	STIFF	STIFFENER
FLG	FLANGE	STL	STEEL
FND	FOUNDATION	STRUCT	STRUCTURAL
F.O.	FACE OF	T&B	TOP & BOTTOM
FS	FAR SIDE OR FIELD SCREW	THK	THICK
FRMG	FRAMING	THRD	THREADED
FT	FOOT OR FEET	T.O.	TOP OF
FTG	FOOTING	TRANS	TRANSVERSE
GA	GAGE	TYP	TYPICAL
GALV	GALVANIZED	UNO	UNLESS NOTED OTHERWISE
GB	GRADE BEAM	VERT	VERTICAL
GC	GENERAL CONTRACTOR	VIF	VERIFY IN FIELD
HAB	HEADED ANCHOR BOLT	W/	WITH
HK	HOOK	W/O	WITHOUT
HORIZ	HORIZONTAL	WF, W	WIDE FLANGE
HP	HIGH POINT	WLD	WELDED
HT	HEIGHT	WP	WORK POINT

INSPECTIONS / MONITORING

1. A REGISTERED SOILS/DEPUTY GRADING INSPECTOR SHALL BE PRESENT DURING ALL SHORING AND EXCAVATION OPERATIONS.

2. THE DEPUTY SOILS/GRADING INSPECTOR SHALL VERIFY THAT THE SIZE, DEPTH AND LOCATIONS OF EACH DRILLED HOLE COMPLIES WITH THE APPROVED PLANS. A LOG OF DEPTH READING FOR EACH DRILLED HOLE SHALL BE AVAILABLE FOR THE BUILDING DEPARTMENT INSPECTOR. THIS DOES NOT WAIVE INSPECTION BY THE BUILDING DEPARTMENT.

3. A REGISTERED DEPUTY INSPECTOR CERTIFIED IN REINFORCED CONCRETE SHALL BE PRESENT FOR POURING OF ALL CONCRETE AND GROUT AND TAKING OF SAMPLES.

4. PRIOR TO POURING CONCRETE OR GROUT IN THE DRILLED HOLES THE GEOTECHNICAL ENGINEER SHALL POST WRITTEN CERTIFICATION AT THE JOB SITE FOR THE CITY BUILDING INSPECTOR, STATING THAT THE SOIL CONDITIONS ENCOUNTERED IN EACH DRILLED HOLE IS IN CONFORMITY WITH THE CONDITIONS INCLUDED IN HIS REPORT. NO CONCRETE OR GROUT SHALL BE POURED UNTIL THE CITY BUILDING INSPECTOR ALSO HAS INSPECTED THE ANCHOR WHERE SPECIFIED EXCAVATION.

5. ALL FIELD WELDING SHALL BE CONDUCTED BY AN AISC CERTIFIED WELDER AND BE CONTINUOUSLY INSPECTED BY A REGISTERED DEPUTY INSPECTOR CERTIFIED IN STRUCTURAL WELDING.

6. SHORING PILES SHALL BE SURVEY MONITORED WEEKLY FOR LINE AND GRADE. ANY ONE-INCH MOVEMENT SHALL BE ANALYZED BY THE GEOTECHNICAL ENGINEER AND DATA PROMPTLY SUBMITTED TO THE EOR. ANY TWO-INCH MOVEMENT SHALL BE CAUSE FOR REMEDIAL SHORING TO PREVENT ADDITIONAL MOVEMENT PRIOR TO FURTHER CONSTRUCTION.

7. MONITORING CAN BE DISCONTINUED AT SUCH TIME AS THE PERMANENT STRUCTURE IS CAPABLE OF TAKING THE PERMANENT EARTH LOAD.

STATEMENT OF SPECIAL INSPECTIONS

010000-0003 (06/06/17)

1. THE OWNER SHALL EMPLOY ONE OR MORE SPECIAL INSPECTORS TO PROVIDE INSPECTIONS DURING CONSTRUCTION. THE SPECIAL INSPECTOR SHALL BE A QUALIFIED PERSON WHO SHALL DEMONSTRATE COMPETENCE, TO THE SATISFACTION OF THE BUILDING OFFICIAL, FOR INSPECTION OF THE PARTICULAR TYPE OF CONSTRUCTION OR OPERATION REQUIRING SPECIAL INSPECTION.

2. SPECIAL INSPECTIONS ARE NOT REQUIRED WHERE THE WORK IS DONE ON THE PREMISES OF A FABRICATOR REGISTERED AND APPROVED TO PERFORM SUCH WORK WITHOUT SPECIAL INSPECTION. APPROVED FABRICATORS MUST SUBMIT A CERTIFICATE OF COMPLIANCE FOR OFFSITE FABRICATIONS SUCH AS STRUCTURAL STEEL, PRECAST CONCRETE, GLUED LAMINATED TIMBER, ETC.

3. ALL INSPECTIONS SHALL BE PERFORMED BY INDEPENDENT SPECIAL INSPECTORS. JOB SITE VISITS BY THE STRUCTURAL ENGINEER OR BUILDING OFFICIAL DO NOT CONSTITUTE AND ARE NOT A SUBSTITUTE FOR INSPECTIONS BY A SPECIAL INSPECTOR.

4. ALL INSPECTION REPORTS SHALL BE SUBMITTED TO THE BUILDING OFFICIAL AND EOR. THE FINAL REPORTS BY THE SPECIAL INSPECTOR(S) MUST CERTIFY THAT THE ENTIRE STRUCTURAL SYSTEM COMPLIES WITH THE APPROVED PLANS AND SPECIFICATIONS.

5. IT IS SOLELY THE CONTRACTOR'S RESPONSIBILITY TO SEE THAT THESE INSPECTIONS ARE PERFORMED.

6. WORK REQUIRING SPECIAL INSPECTION SHALL BE INSPECTED BY THE SPECIAL INSPECTOR WHO IS PRESENT IN THE AREA WHERE THE WORK IS PERFORMED AND AT THE COMPLETION OF WORK. CONTINUOUS INSPECTION CONSISTS OF FULL-TIME INSPECTION; PERIODIC INSPECTION CONSISTS OF PART-TIME OR INTERMITTENT INSPECTION.

7. THE FOLLOWING SPECIAL INSPECTIONS ARE IN ADDITION TO INSPECTIONS BY THE BUILDING OFFICIAL. THIS LIST IS NOT INTENDED TO BE ALL INCLUSIVE.

SOILS SUPPORTING FOUNDATIONS

PERIODIC: VERIFY MATERIALS BELOW FOOTINGS ARE ADEQUATE TO ACHIEVE THE DESIGN BEARING CAPACITY

CONT: SHORING AND EXCAVATION OPERATIONS

PERIODIC: VERIFY EXCAVATIONS ARE EXTENDED TO PROPER DEPTH AND HAVE REACHED PROPER MATERIAL

PERIODIC: PERFORM CLASSIFICATION AND TESTING OF CONTROLLED FILL MATERIALS

CONT: VERIFY USE OF PROPER MATERIALS, DENSITIES AND LIFT THICKNESSES DURING PLACEMENT AND COMPACTION OF CONTROLLED FILLS

PERIODIC: PRIOR TO PLACEMENT OF CONTROLLED FILL, INSPECT SUBGRADE AND VERIFY THAT SITE HAS BEEN PREPARED PROPERLY

STRUCTURAL CONCRETE

PERIODIC: INSPECTION OF REINFORCING STEEL AND PLACEMENT

CONT: INSPECT BOLTS TO BE INSTALLED IN CONCRETE PRIOR TO AND DURING PLACEMENT OF CONCRETE

PERIODIC: VERIFY USE OF REQUIRED DESIGN MIX

CONT: SAMPLING FRESH CONCRETE & PERFORMING SLUMP AND AIR CONTENT TESTS & DETERMINING THE TEMPERATURE OF FRESH CONCRETE AT THE TIME OF MAKING SPECIMENS FOR STRENGTH TESTS

CONT: INSPECTION OF CONCRETE AND SHOTCRETE PLACEMENT FOR PROPER APPLICATION TECHNIQUES

PERIODIC: INSPECTION FOR MAINTENANCE OF SPECIFIED CURING TEMPERATURE AND TECHNIQUE

PERIODIC: VERIFICATION OF IN-SITU CONCRETE STRENGTH, PRIOR TO REMOVAL OF SHORES AND FORMS FROM BEAMS AND STRUCTURAL SLABS

PERIODIC: INSPECT FORMWORK FOR SHAPE, LOCATION AND DIMENSIONS OF THE CONCRETE MEMBER BEING FORMED

PERIODIC: POST-INSTALLED AND ADHESIVE ANCHORS

CONT: POST-INSTALLED AND ADHESIVE ANCHORS

CONT: IINSPECTION FOR PLACEMENT OF CONCRETE WITH F'c GREATER THAN 2500 PSI

STRUCTURAL STEEL

PERIODIC: STRUCTURAL STEEL IDENTIFICATION MARKINGS TO CONFORM TO ASTM STANDARDS SPECIFIED IN THE APPROVED CONSTRUCTION DOCUMENTS

PERIODIC: STRUCTURAL STEEL MANUFACTURER'S CERTIFIED MILL TEST REPORTS

PERIODIC: STEEL FRAME BRACING AND STIFFENER DETAILS FOR COMPLIANCE WITH APPROVED CONSTRUCTION DOCUMENTS

ed PERIODIC: APPLICATIONS OF JOINT DETAILS AT EACH CONNECTION

REFER TO AISC 360 CHAPTER N FOR MORE INFORMATION ON REQUIRED INSPECTIONS RELATED TO STEEL CONSTRUCTION.

WELDING

CONT: COMPLETE AND PARTIAL PENETRATION GROOVE WELDS

CONT: FILLET WELDS > 5/16" AND MULTIPASS FILLET WELDS

PERIODIC: FILLET WELDS < 5/16"

PERIODIC: WELD FILLER MATERIAL IDENTIFICATION MARKINGS TO CONFORM TO AWS STANDARDS SPECIFIED IN THE APPROVED CONSTRUCTION DOCUMENTS, MANUFACTURER'S CERTIFICATION OF COMPLIANCE REQUIRED

PERIODIC: VERIFICATION OF WELDABILITY OF REINFORCING STEEL OTHER THAN ASTM A706

CONT: WELDING OF STIRRUPS, HOOPS OR TIES

PERIODIC: ALL OTHER REINFORCING STEEL WELDS, UNO

Not for permitting or construction

PBK

ARCHITECT PBK Architects, Inc.
PBK.com
SAN LUIS OBISPO
1327 Archer Street, Suite 110
San Luis Obispo, CA 93401
805-329-3076

miyamoto.
1047 Fleet Street Street - Suite A
San Diego, CA 92101
T: (619) 270-8848
miyamotosandiegoinfo@miyamoto.com
Job No. 19-00-00002

FIRE STATION #44
COASTSIDE FIRE PROTECTION DISTRICT

501 STETSON STREET
MOSS BEACH, CA 94038
100% CD SET

BID SET

KEY PLAN

PLAN NORTH TRUE NORTH

REGISTERED PROFESSIONAL ENGINEER STEVEN ALAN CRONYN 53893 CIVIL STATE OF CALIFORNIA

CLIENT
COASTSIDE FIRE PROTECTION DISTRICT

PROJECT NUMBER
230137

DATE 3/21/2025

DRAWN BY: KF/OS CHKED BY: AD

REVISIONS

#	DESCRIPTION	DATE

GENERAL NOTES

This document is for plan review only

SS-002

1/30/2025 4:24:54 PM

A3.1 - REFLECTED CEILING PLAN

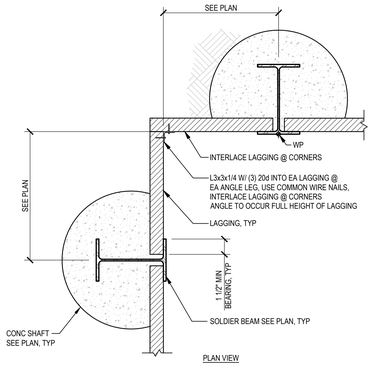

17 ANGLE STRAPPING DETAIL
3/4"=1'-0"
X-DET-013 (16)

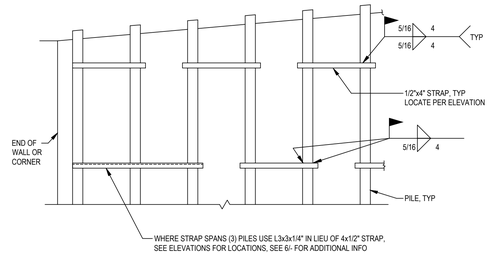

13 TYPICAL PARTIAL ELEVATION AT TEMP SHORING
NTS
X-DET-003 (48)

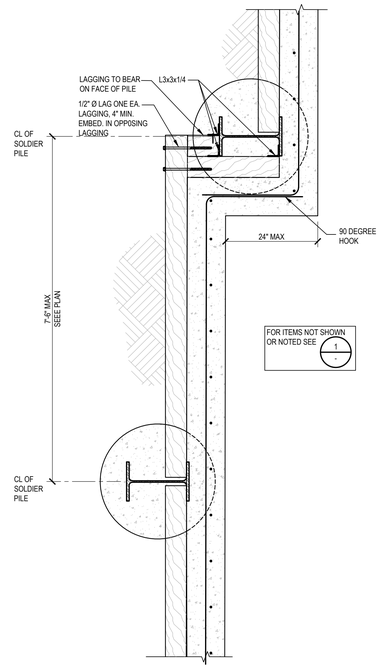

10 CORNER DETAIL
3/4"=1'-0"
X-DET-007 (16)

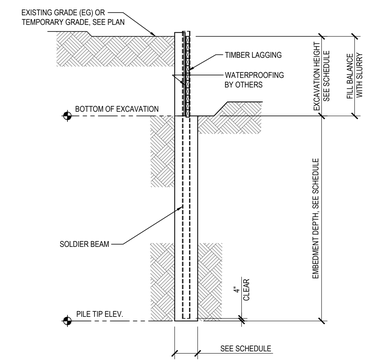

5 SECTION AT BULKHEAD
1/8"=1'-0"
X-DET-004 (96)

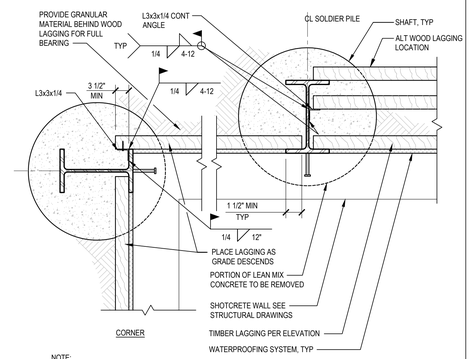

NOTE:
1. ANY WOOD LEFT IN THE GROUND SHALL BE TREATED WITH PRESERVATIVE.

1 WOOD LAGGING
3/4"=1'-0"
X-DET-001 (16)

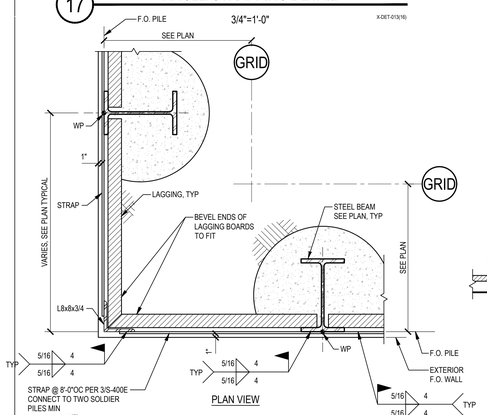

18 OUTSIDE CORNER DETAIL
NTS
X-DET-016 (16)

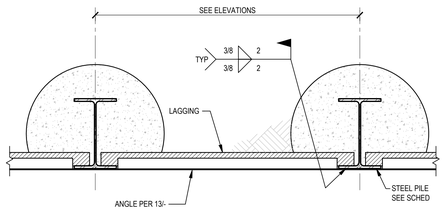

14 ANGLE STRAPPING DETAIL
3/4"=1'-0"
X-DET-012 (16)

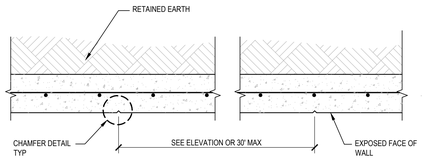

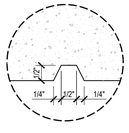

CHAMFER DETAIL

11 CONTROL JOINT
3/4"=1'-0"
X-DET-018 (16)

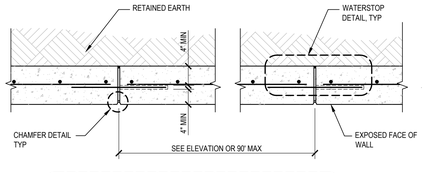

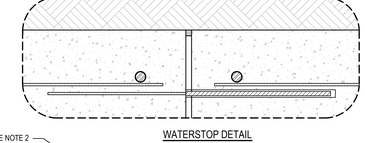

WATERSTOP DETAIL

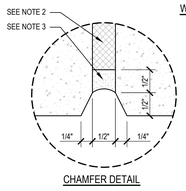

CHAMFER DETAIL

NOTES:
1. WATERSTOPS SHALL BE FLEXIBLE BENTONITE TYPE WATERSTOPS SUCH AS TREMCO SUPERSTOP OR APPROVED EQUIVALENT.
2. JOINT FILLER SHALL BE CLOSED CELL SUPERIOR GRADE POLYETHYLENE OR NON-EXTRUDING PVC, SUCH AS SONNEBORN "VINYLFOAM", SERVICES "RODOFOAM II" BY W.R. GRACE, DECK-O-FOAM BY W.R. MEADOWS OR APPROVED EQUIVALENT.
3. TWO COMPOUND NONSTAINING GRAY SEALING COMPOUND WITH POLYSULFIDE LIQUID POLYMER GUN-GRADE WITH PRIMER.
4. JOINT NOT REQUIRED IF THE WALL IS STAINED AND SCULPTED.

12 EXPANSION JOINT
NTS
X-DET-019 (16)

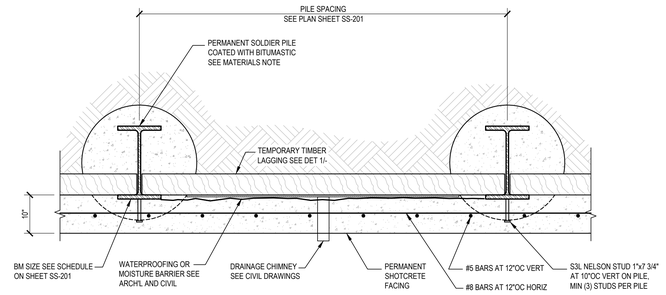

6 PERMANENT SHOTCRETE FACING TO SOLDIER PILE TYPICAL
3/4"=1'-0"
X-DET-017 (16)

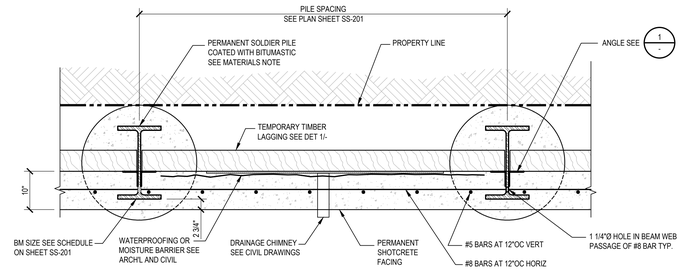

7 PERMANENT SHOTCRETE FACING TO SOLDIER PILE AT PROPERTY LINE
3/4"=1'-0"
X-DET-017 (16)

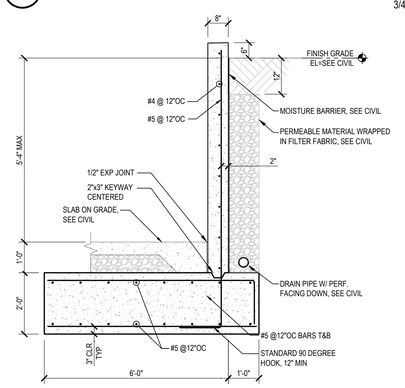

8 RETAINING WALL DETAIL
1/2"=1'-0"
X-DET-026 (24)

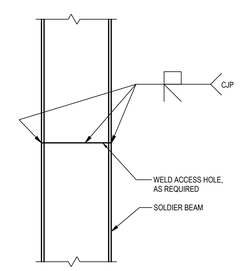

ELEVATION

4 SOLDIER BEAM SPLICE DETAIL
3/4"=1'-0"
X-DET-002 (16)

1/30/2025 4:24:54 PM

Not for permitting or construction

PBK

ARCHITECT PBK Architects, Inc.
PBK.com
SAN LUIS OBISPO
1327 Archer Street, Suite 110
San Luis Obispo, CA 93401
805-529-3076

miyamoto.
1547 West Bain Street, Suite A
Ontario, CA 91762
Ontario, CA 91762
CA Reg. No. 000000000
T: (833) 270-0444
miyamotoontario@gmail.com

FIRE STATION #44
COASTSIDE FIRE PROTECTION DISTRICT

501 STETSON STREET
MOSS BEACH, CA 94038
100% CD SET

BID SET

KEY PLAN
PLAN NORTH
TRUE NORTH

REGISTERED PROFESSIONAL ENGINEER
ANTHONY ALAN DRAGUN
S3845
STRUCTURAL
STATE OF CALIFORNIA

CLIENT
COASTSIDE FIRE PROTECTION DISTRICT
PROJECT NUMBER
230137
DATE 3/21/2025
DRAWN BY: KF/OS CHKED BY: AD
REVISIONS

#	DESCRIPTION	DATE

TYPICAL DETAILS

This document is for plan review only

SS-003

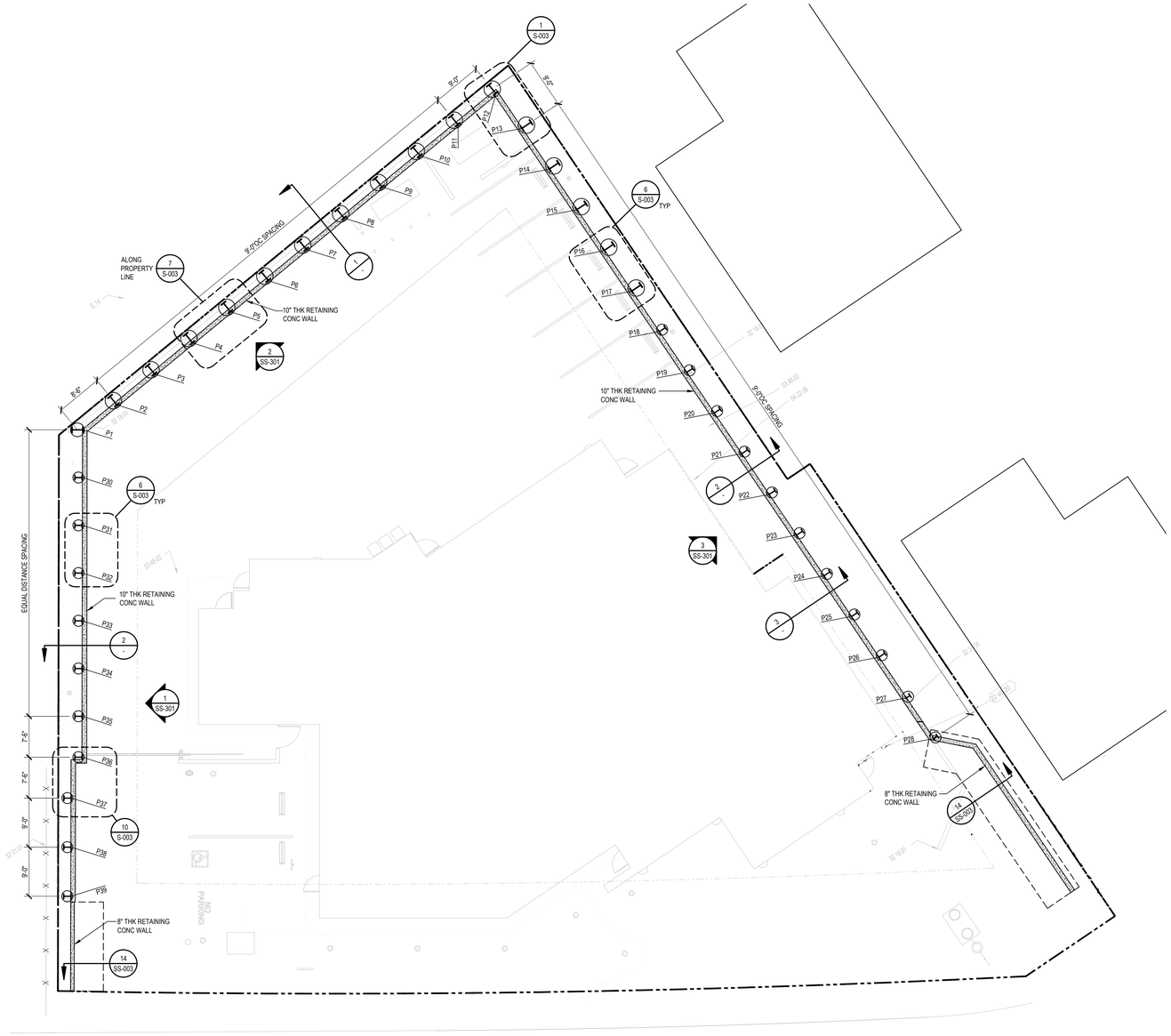

NOTES:
SEE CIVIL PLANS FOR ALL DRAINAGE CONVEYANCE SYSTEMS AND THEIR DISCHARGE POINTS

RETAINING WALL PLAN

1" = 10'-0"

North

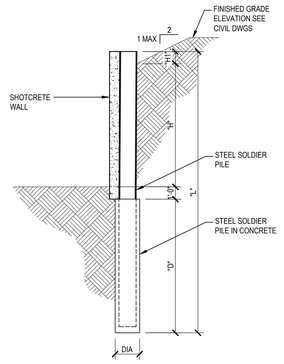

SOLDIER PILE SCHEDULE						
PILE MARK	SHAFT DIA (FT)	SOLDIER BEAM SIZE	EXCAVATION HEIGHT H (FT)	MIN CONC EMBEDMENT DEPTH D (FT)	MIN PILE TOTAL LENGTH L (FT)	MAX HEIGHT ABOVE RETAINED SOIL H1 (FT)
P1	3'-0"	W24x192	11'-0"	32	44'-0"	2'-0"
P2	3'-0"	W24x192	11'-4"	32	44'-4"	2'-0"
P3	3'-0"	W24x192	11'-8"	32	44'-8"	2'-0"
P4	3'-0"	W24x192	12'-0"	32	45'-0"	2'-0"
P5	3'-0"	W24x192	12'-4"	32	45'-4"	2'-0"
P6	3'-0"	W24x192	12'-8"	32	45'-8"	2'-0"
P7	3'-0"	W24x192	13'-0"	32	46'-0"	2'-0"
P8	3'-0"	W24x192	13'-4"	32	46'-4"	2'-0"
P9	3'-0"	W24x192	13'-8"	32	46'-8"	2'-0"
P10	3'-0"	W24x192	14'-0"	32	47'-0"	2'-0"
P11	3'-0"	W24x192	14'-3"	32	47'-3"	2'-0"
P12	3'-0"	W24x192	14'-3"	32	47'-3"	2'-0"
P13	3'-0"	W24x192	13'-8"	32	46'-8"	2'-0"
P14	3'-0"	W24x192	13'-2"	32	46'-2"	2'-0"
P15	3'-0"	W24x192	12'-8"	32	45'-8"	2'-0"
P16	3'-0"	W24x192	12'-0"	32	45'-0"	2'-0"
P17	3'-0"	W24x192	11'-4"	32	44'-4"	2'-0"
P18	2'-6"	W18x119	10'-8"	28	39'-8"	2'-0"
P19	2'-6"	W18x119	10'-0"	28	39'-0"	2'-0"
P20	2'-6"	W18x119	9'-4"	28	38'-4"	2'-0"
P21	2'-6"	W18x119	9'-0"	28	38'-0"	2'-0"
P22	2'-6"	W18x119	8'-4"	28	37'-4"	2'-0"
P23	2'-6"	W16x67	7'-8"	22	30'-8"	2'-0"
P24	2'-6"	W16x67	7'-0"	22	30'-0"	2'-0"
P25	2'-6"	W16x67	6'-4"	22	29'-4"	2'-0"
P26	2'-0"	W10x45	5'-8"	18	24'-8"	2'-0"
P27	2'-0"	W10x45	5'-0"	18	24'-0"	2'-0"
P28	2'-0"	W10x45	4'-4"	18	23'-4"	2'-0"
VOID						
P30	2'-6"	W18x119	10'-8"	28	39'-8"	2'-0"
P31	2'-6"	W18x119	10'-0"	28	39'-0"	2'-0"
P32	2'-6"	W18x119	9'-4"	28	38'-4"	2'-0"
P33	2'-6"	W18x119	8'-8"	28	37'-8"	2'-0"
P34	2'-6"	W18x119	8'-0"	28	37'-0"	2'-0"
P35	2'-6"	W16x67	7'-8"	22	30'-8"	2'-0"
P36	2'-6"	W16x67	7'-0"	22	30'-0"	2'-0"
P37	2'-6"	W16x67	6'-4"	22	29'-4"	2'-0"
P38	2'-6"	W16x67	6'-0"	22	29'-0"	2'-0"
P39	2'-6"	W16x67	5'-0"	22	28'-0"	2'-0"

NOTE:
1. TIMBER LAGGING SHALL BE 4x12 DF S.S. FULL DEPTH FOR HORIZONTAL SPANS UP TO 9'-0".

4 SECTION

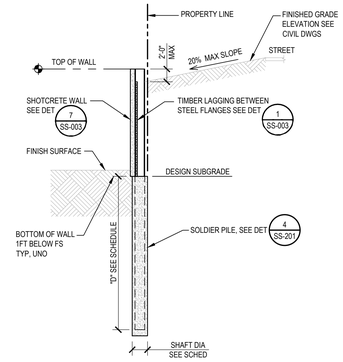

1 RETAINING WALL SECTION

1" = 10'-0"

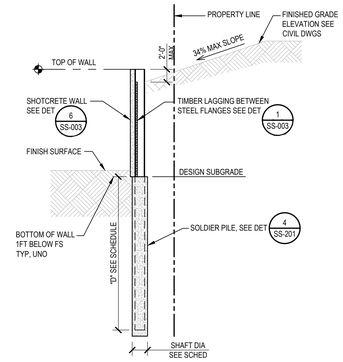

2 RETAINING WALL SECTION

1" = 10'-0"

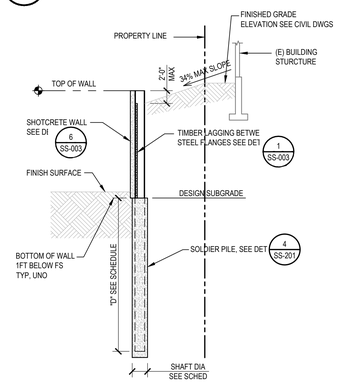

3 RETAINING WALL SECTION

1" = 10'-0"

Not for permitting or construction

PBK

ARCHITECT PBK Architects, Inc.
PBK.com
SAN LUIS OBISPO
1327 Archer Street, Suite 110
San Luis Obispo, CA 93401
805-329-3076

miyamoto.
1327 West Bain Street - Suite A
Ontario, CA 91762
T: (855) 270-8848
Email: info@miyamotointernational.com
CA Reg. No. 00000002

FIRE STATION #44
COASTSIDE FIRE PROTECTION DISTRICT

501 STETSON STREET
MOSS BEACH, CA 94038
100% CD SET

BID SET

KEY PLAN

PLAN NORTH TRUE NORTH

REGISTERED PROFESSIONAL ENGINEER
ANTHONY ALAN CROSSE
S2845
STRUCTURAL
STATE OF CALIFORNIA

CLIENT
COASTSIDE FIRE PROTECTION DISTRICT
PROJECT NUMBER
230137
DATE 3/21/2025
DRAWN BY: KF/OS CHKED BY: AD
REVISIONS

#	DESCRIPTION	DATE

PERMANENT WALL PLAN & SECTIONS

SS-201

This document is for plan review only

A3.1 - REFLECTED CEILING PLAN

1/30/2025 4:24:54 PM

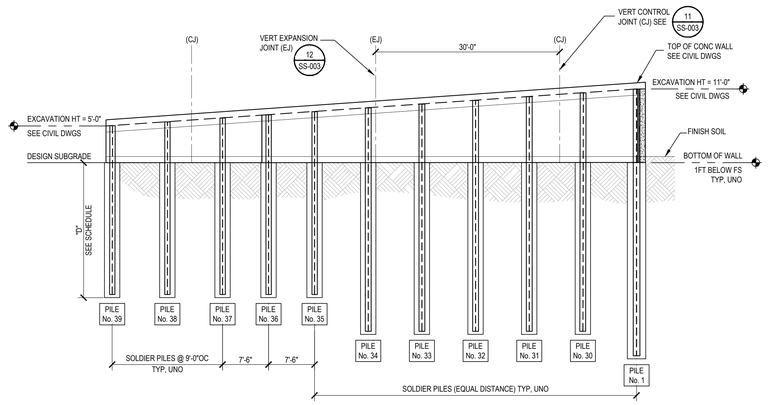

1 ELEVATION A

1" = 10'-0"

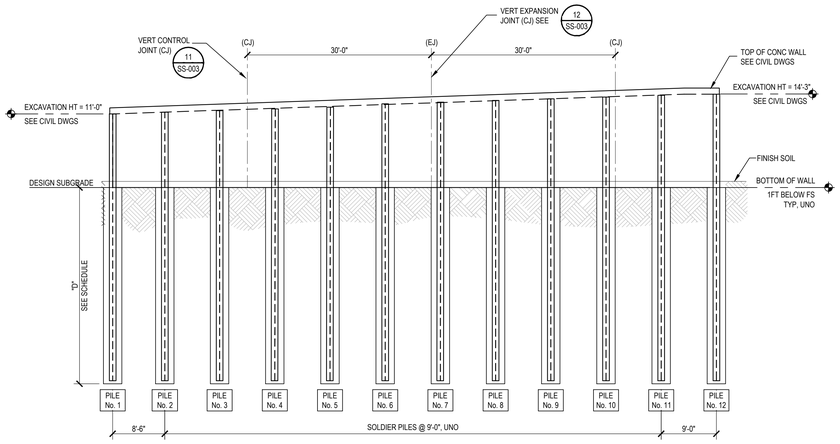

2 ELEVATION B

1" = 10'-0"

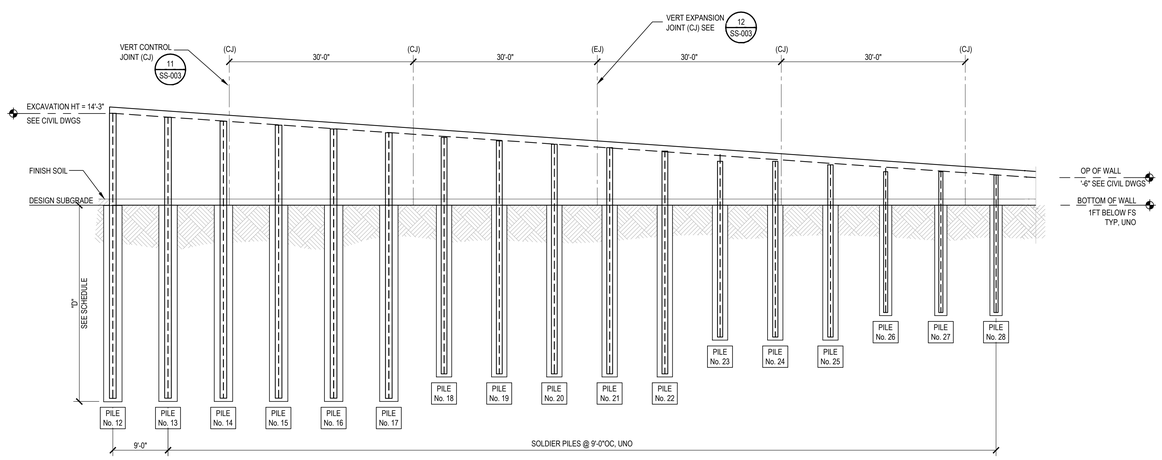

3 ELEVATION C

1" = 10'-0"

A3.1 - REFLECTED CEILING PLAN

1/30/2025 4:24:54 PM

Not for permitting or construction

PBK

ARCHITECT PBK Architects, Inc.
PBK.com
SAN LUIS OBISPO
1327 Archer Street, Suite 110
San Luis Obispo, CA 93401
805-329-3076

miyamoto.
1327 West Bain Street - Suite A
Ontario, CA 91762
T: (855) 270-0644
Ca License No. 1100000022
miyamotointernational.com

FIRE STATION #44
COASTSIDE FIRE PROTECTION DISTRICT

501 STETSON STREET
MOSS BEACH, CA 94038
100% CD SET

BID SET

KEY PLAN

PLAN NORTH

TRUE NORTH

REGISTERED PROFESSIONAL ENGINEER
JEFFREY ALAN CRAWFORD
S2845
STRUCTURAL
STATE OF CALIFORNIA

CLIENT
COASTSIDE FIRE PROTECTION DISTRICT

PROJECT NUMBER
230137

DATE 3/21/2025

DRAWN BY: KF/OS CHKED BY: AD

REVISIONS

#	DESCRIPTION	DATE

This document is for plan review only

PERMANENT WALL ELEVATIONS

SS-301

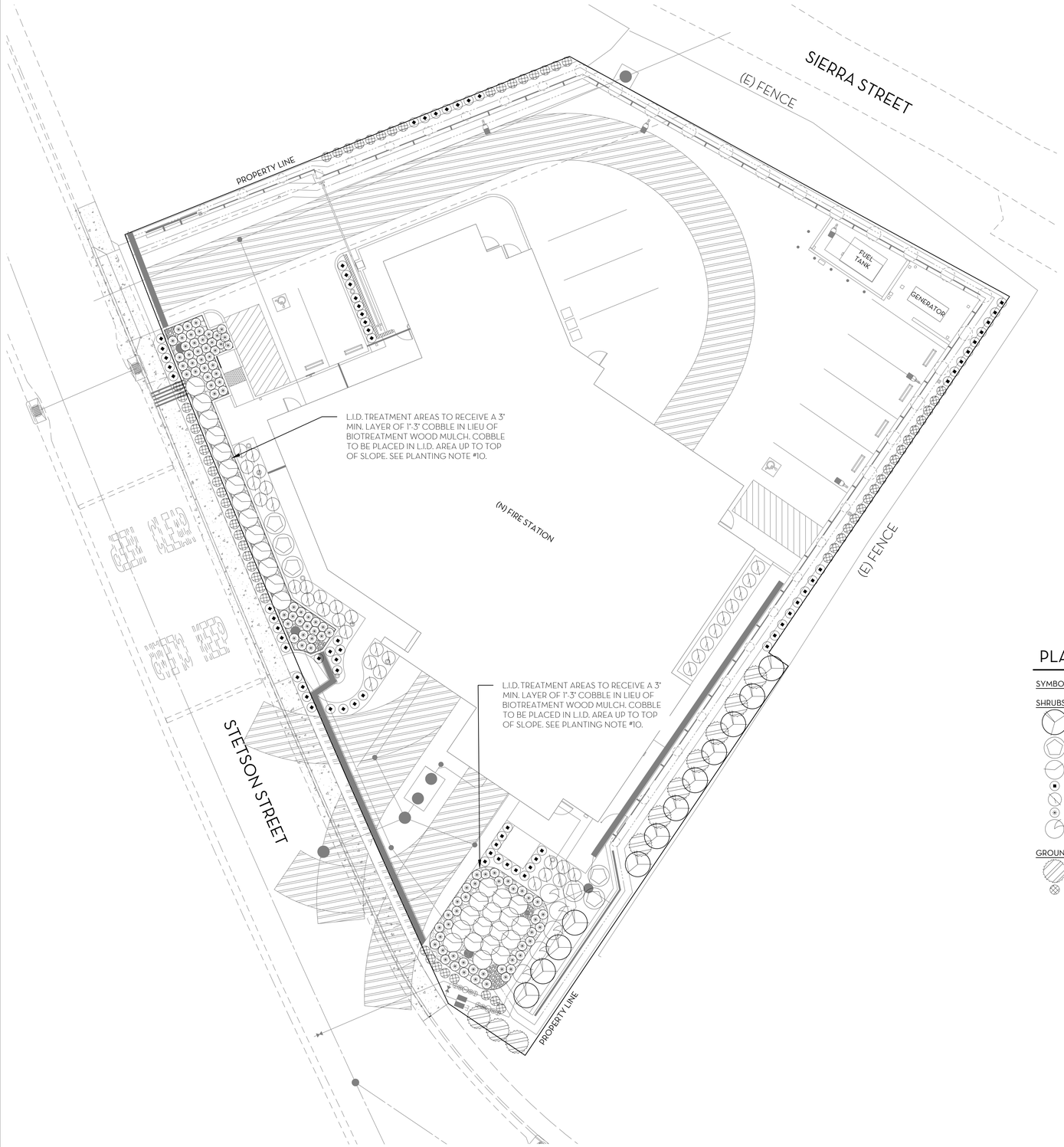

PLANTING NOTES

1. PLANT MATERIAL QUANTITIES SHOWN ON DRAWINGS ARE INFORMATIONAL ONLY. THE CONTRACTOR IS RESPONSIBLE FOR ALL PLANT MATERIAL REQUIRED.
2. IMMEDIATELY AFTER AWARD OF CONTRACT, THE CONTRACTOR SHALL NOTIFY THE LANDSCAPE ARCHITECT IF SPECIFIED PLANT MATERIAL IS AVAILABLE FROM COMMERCIAL NURSERIES. IN CASE A PLANT IS NOT AVAILABLE, THE LANDSCAPE ARCHITECT WILL PROVIDE ALTERNATE PLANT MATERIAL SELECTIONS. SUCH CHANGES WILL NOT ALTER THE CONTRACTOR'S ORIGINAL BID PRICE UNLESS A CREDIT IS DUE TO THE OWNER.
3. EXCAVATED PLANT PITS SHALL HAVE POSITIVE DRAINAGE. PLANT PITS WHEN FULLY FLOODED WITH WATER SHALL DRAIN WITHIN 6 HOURS OF FILLING. THE CONTRACTOR SHALL ENSURE ALL PLANT PITS HAVE POSITIVE DRAINAGE. SEE SPECIFICATIONS FOR EXACT REQUIREMENTS.
4. ALL PLANT MATERIALS SHALL COMPLY WITH FORM AND CHARACTERISTIC REQUIREMENTS AS SPECIFIED. ALL PLANT MATERIAL WILL COMPLY WITH ANSI Z60.1 'STANDARD FOR NURSERY STOCK'.
5. THE CONTRACTOR SHALL CONFORM TO ALL CONDITIONS AND REQUIREMENTS CONTAINED WITHIN THE LANDSCAPE INSTALLATION SPECIFICATIONS. THE CONTRACTOR SHALL HAVE AVAILABLE ON THE JOB SITE AT ALL TIMES, THE CONSTRUCTION ISSUE SPECIFICATIONS FOR INSPECTION BY THE LANDSCAPE ARCHITECT. THE CONTRACTOR SHALL INSERT IN THE PLANS ALL OFFICIAL/APPROVED ADDENDUMS AND/OR CHANGE ORDERS RELATIVE TO THE LANDSCAPE INSTALLATION IN CHRONOLOGICAL ORDER.
6. THE CONTRACTOR IS RESPONSIBLE FOR SOIL EROSION CONTROL MEASURES THAT MAY BE REQUIRED THROUGH THE DURATION OF THE CONTRACT PERIOD. SHOULD THERE BE EXISTING SOIL EROSION CONDITIONS THAT REQUIRE MITIGATION WHEN THE CONTRACTOR INITIALLY ACCEPTS THE SITE, THE LANDSCAPE ARCHITECT AND OWNER SHOULD BE ALERTED TO ITS EXISTENCE. FAILURE OF THE CONTRACTOR TO NOTIFY THE LANDSCAPE ARCHITECT AND OWNER IMPLIES ACCEPTANCE OF THE SITE BY THE CONTRACTOR IN ITS EXISTING CONDITION. ALL COSTS NECESSARY TO MITIGATE EXISTING EROSION PROBLEMS SHALL BE AT THE CONTRACTOR'S EXPENSE AND AT NO EXTRA COST TO THE OWNER OR INCREASE THE ORIGINAL BID AMOUNT.
7. THE CONTRACTOR SHALL VERIFY LOCATIONS OF ALL UNDERGROUND UTILITY SYSTEMS PRIOR TO BEGINNING ANY PHASE OF CONSTRUCTION THAT MAY CAUSE DAMAGE TO EXISTING STRUCTURES. CALL U.S.A. TO LOCATE ALL EXISTING UTILITIES (800) 227-2600. THE CONTRACTOR SHALL BE RESPONSIBLE FOR THE REPAIR/REPLACEMENT OF DAMAGED UTILITIES, TO THE SATISFACTION OF THE OWNER OR GOVERNING AGENCY AND AT NO EXTRA COST TO THE OWNER OR INCREASE IN BID AMOUNT.
8. INCORPORATE COMPOST AT A RATE OF AT LEAST FOUR CUBIC YARDS PER 1,000 SQUARE FEET TO A DEPTH OF SIX INCHES INTO LANDSCAPE AREA (UNLESS CONTRA-INDICATED BY A SOIL TEST).
9. ALL NON-TURF PLANTING AREAS SHALL BE TOP DRESSED WITH A 3" LAYER OF COMPOSTED WOOD BARK MULCH, CONSISTENT WITH THE NEW REGIONAL BIOTREATMENT WOOD MULCH (BWM).
10. A MINIMUM 3" LAYER OF BIOTREATMENT WOOD MULCH SHALL BE APPLIED ON ALL EXPOSED SOIL SURFACES OF PLANTING AREAS EXCEPT TURF AREAS, CREEPING OR ROOTING GROUNDCOVERS, DIRECT SEEDING APPLICATIONS, OR L.I.D. TREATMENT AREAS. L.I.D. TREATMENT AREAS TO RECEIVE A 3" MIN. LAYER OF 1"-3" COBBLE IN LIEU OF BARK MULCH.
11. BIOTREATMEENT WOOD MULCH (BWM) IS PREFERRED TO BE UTILIZED ON THIS PROJECT. ORGANIC MATERIAL SHALL BE PRODUCED BY A FACILITY MEETING CALIFORNIA SB 1383 MINIMUM REQUIREMENTS AND INCLUDE:
    - THE INCORPORATION OF SOIL AMENDMENTS WHEN PLANTING;
    - USE OF COMPOST FOR LANDSCAPE INSTALLATIONS WITH A MINIMUM OF FOUR CUBIC YARDS PER 1,000 SQUARE FEET AND A DEPTH OF SIX INCHES; AND
    - APPLICATION OF A MINIMUM THREE INCH LAYER OF MULCH FOR PLANTING AREAS.
12. THE LANDSCAPE CONTRACTOR SHALL ACT AS A DIRECT SERVICE PROVIDER TO THE COUNTY AND SHALL REPORT THE AMOUNT OF RECOVERED ORGANIC MULCH AND COMPOST UTILIZED FOR THE PROJECT AT THE TIME OF THE FINAL INSPECTION.
13. ALL PLANTING WORK SHALL BE IN ACCORDANCE WITH CURRENT COUNTY STANDARD SPECIFICATIONS.
14. AT THE END OF THE ESTABLISHMENT PERIOD, A FINAL WALK THROUGH WILL BE CONDUCTED BY THE CONTRACTOR, TO INCLUDE THE LANDSCAPE ARCHITECT OF RECORD AND THE OWNER'S REPRESENTATIVE.
12. THE CONTRACTOR SHALL PROVIDE ALL REQUIRED LANDSCAPE DOCUMENTATION TO THE LANDSCAPE ARCHITECT OF RECORD SO THE LANDSCAPE ARCHITECT MAY COMPLETE THE CERTIFICATE OF COMPLETION DOCUMENTATION TO ACHIEVE PERMIT ACCEPTANCE AND SIGN OFF AT THE END OF MAINTENANCE PERIOD, AS REQUIRED BY THE COUNTY'S WATER EFFICIENT LANDSCAPE ORDINANCE.

PLANT SCHEDULE

SYMBOL	BOTANICAL NAME	COMMON NAME	SIZE	WATER USE	PLANT SIZE	QTY
SHRUBS						
	ARCTOSTAPHYLOS GLANDULOSA	EASTWOOD MANZANITA	5 GAL.	VERY LOW	8`X6`	12
	CEANOTHUS THYRSIFLORUS 'SKYLARK'	SKYLARK BLUEBLOSSOM	5 GAL.	LOW	3` X 5`	6
	CHONDROPETALUM TECTORUM	CAPE RUSH	5 GAL.	LOW	3` X 4`	31
	ERIOGONUM LATIFOLIUM	COAST BUCKWHEAT	1 GAL.	LOW	2`X 2`	69
	IRIS DOUGLASIANA	DOUGLAS IRIS	5 GAL.	LOW	2`X 3`	37
	JUNCUS PATENS	CALIFORNIA GRAY RUSH	1 GAL.	LOW	2`X 2`	94
	MUHLENBERGIA RIGENS	DEER GRASS	5 GAL.	LOW	4`X4`	5
GROUNDCOVERS						
	BACCHARIS PILULARIS 'PIGEON POINT'	PIGEON POINT COYOTE BRUSH	5 GAL.	LOW	1`X8`	10
	ERIGERON GLAUCUS 'CAPE SEBASTIAN'	CAPE SEBASTIAN SEASIDE DAISY	1 GAL.	LOW	0.5`X2`	63

WATER EFFICIENT LANDSCAPE ORDINANCE COMPLIANCE

I HAVE COMPLIED WITH THE CRITERIA OF THE WATER EFFICIENT LANDSCAPING ORDINANCE AND APPLIED THEM FOR THE EFFICIENT USE OF WATER IN THE LANDSCAPE DESIGN PLAN.

KEITH P. WILSON, ASLA, CRLA 4728

0' 5' 10'
(1" = 10'-0")

PBK
ARCHITECT PBK Architects, Inc.
PBK.com
SAN LUIS OBISPO
1327 Archer Street, Suite 110
San Luis Obispo, CA 93401
805-329-3076

wilson design studio
Wilson Design Studio Landscape Architecture
2020 I Street, Suite 220
Sacramento, CA 95811
916.524.5614 | www.wdsla.com

FIRE STATION #44
COASTSIDE FIRE PROTECTION DISTRICT

501 STETSON STREET
MOSS BEACH, CA 94038
BID SET

BID SET

KEY PLAN
PLAN NORTH
TRUE NORTH

REGISTERED LANDSCAPE ARCHITECT
KEITH P. WILSON
No. 4728
Signature
EXPIRATION DATE: MAY 30, 2027
STATE OF CALIFORNIA

CLIENT
COASTSIDE FIRE PROTECTION DISTRICT
PROJECT NUMBER
230137
DATE 09/17/2026
DRAWN BY: CW CHKED BY: JM
REVISIONS

#	DESCRIPTION	DATE

PLANTING PLAN & NOTES

L1.0

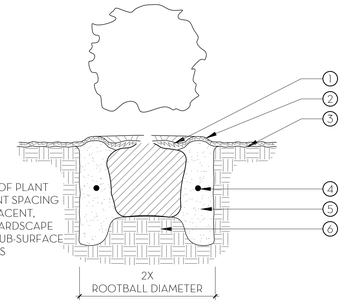

NOTE

LOCATE CENTER OF PLANT ONLY 1/2 OF PLANT SPACING AWAY FROM ADJACENT, NON-PERVIOUS HARDSCAPE WHERE DRIP OR SUB-SURFACE DRIP IRRIGATION IS TO BE USED.

KEY NOTES
1. 3" LAYER OF BARK MULCH.
2. 3" HIGH UNDISTURBED SOIL MOUND.
3. FINISH GRADE: PLANT ROOT CROWN 1" ABOVE FINISH GRADE. PROVIDE POSITIVE DRAINAGE AWAY FROM ROOTBALL.
4. FERTILIZER TABLETS.
5. PREPARED BACKFILL PER SOIL ANALYSIS RECOMMENDATIONS.
6. EXISTING UNDISTURBED SOIL. PROVIDE POSITIVE DRAINAGE AWAY FROM ROOTBALL.

NOTES
A. LOCATE FERTILIZER TABLETS A FEW INCHES AWAY FROM ROOTBALL TO AVOID BURNING ROOT TIPS.
B. LOOSEN AND/OR CUT ANY ROOTS ENCIRCLING ROOTBALL PRIOR TO PLANTING.
C. SCARIFY SIDES OF PLANTING HOLE PRIOR TO PLANTING ROOTBALL.

A SHRUB PLANTING

NOT TO SCALE — P-PU-COA-03

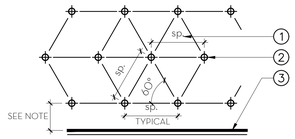

PLAN
NOT TO SCALE

KEY NOTES
1. GROUNDCOVER SPACING; SEE PLANTING LEGEND.
2. GROUNDCOVER CENTERS, TYP.
3. WALK, WALK OR EDGE OF GROUNDCOVER PLANTING AREA.

NOTES
A. LOCATE CENTER OF PLANT ONLY 1/2 OF PLANT SPACING AWAY FROM ADJACENT, NON-PERVIOUS HARDSCAPE WHERE DRIP OR SUB-SURFACE DRIP IRRIGATION IS TO BE USED.
B. RIP OR SCARIFY TOP 12" OF SUBGRADE PRIOR TO PLANTING.
C. ROTOTILL AMENDMENTS AND FERTILIZER INTO TOPSOIL PER SOIL ANALYSIS RECOMMENDATIONS.

B GROUNDCOVER SPACING & PLANTING

NOT TO SCALE — P-PU-COA-04

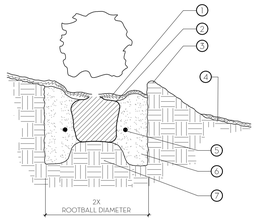

KEY NOTES
1. MULCH: 3" LAYER.
2. CORNER OF ROOT BALL TO BE AT LINE OF ORIGINAL GRADE.
3. FIRMLY FORMED EARTH MOUND: 4" HIGH, (MIN.) ON UPHILL SIDE OF TREE; 6" HIGH (MIN) ON DOWNHILL SIDE OF TREE.
4. FINISH GRADE.
5. PLANT TABS AS RECOMMENDED IN SOIL ANALYSIS REPORT.
6. PREPARE BACKFILL. BACKFILL AS PER SOIL ANALYSIS RECOMMENDATIONS.
7. EXISTING UNDISTURBED SOIL TO FORM PEDESTAL TO PREVENT SETTLING.

NOTES
A. LOCATE FERTILIZER TABLETS A FEW INCHES AWAY FROM ROOTBALL TO AVOID BURNING ROOT TIPS.
B. LOOSEN AND/OR CUT ANY ROOTS ENCIRCLING ROOTBALL PRIOR TO PLANTING.
C. SCARIFY SIDES OF PLANTING HOLE PRIOR TO PLANTING ROOTBALL.

C SHRUB/GROUNDCOVER PLANTING - ON SLOPE

N.T.S. — P-PU-COA-12

PBK

ARCHITECT PBK Architects, Inc.
PBK.com

SAN LUIS OBISPO
1327 Archer Street, Suite 110
San Luis Obispo, CA 93401
805-329-3076

wilson design studio
Wilson Design Studio Landscape Architecture
2020 I Street, Suite 220
Sacramento, CA 95811
916.524.5614 | www.wdsla.com

FIRE STATION #44
COASTSIDE FIRE PROTECTION DISTRICT

501 STETSON STREET
MOSS BEACH, CA 94038
BID SET

BID SET

KEY PLAN

PLAN NORTH — TRUE NORTH

REGISTERED LANDSCAPE ARCHITECT
KEITH P. WILSON
No. 4728
Signature
EXPIRATION DATE: MAY 30, 2027
STATE OF CALIFORNIA

CLIENT
COASTSIDE FIRE PROTECTION DISTRICT

PROJECT NUMBER
230137

DATE 09/17/2026

DRAWN BY: CW CHKED BY: JM

REVISIONS

#	DESCRIPTION	DATE

PLANTING DETAILS

L1.1

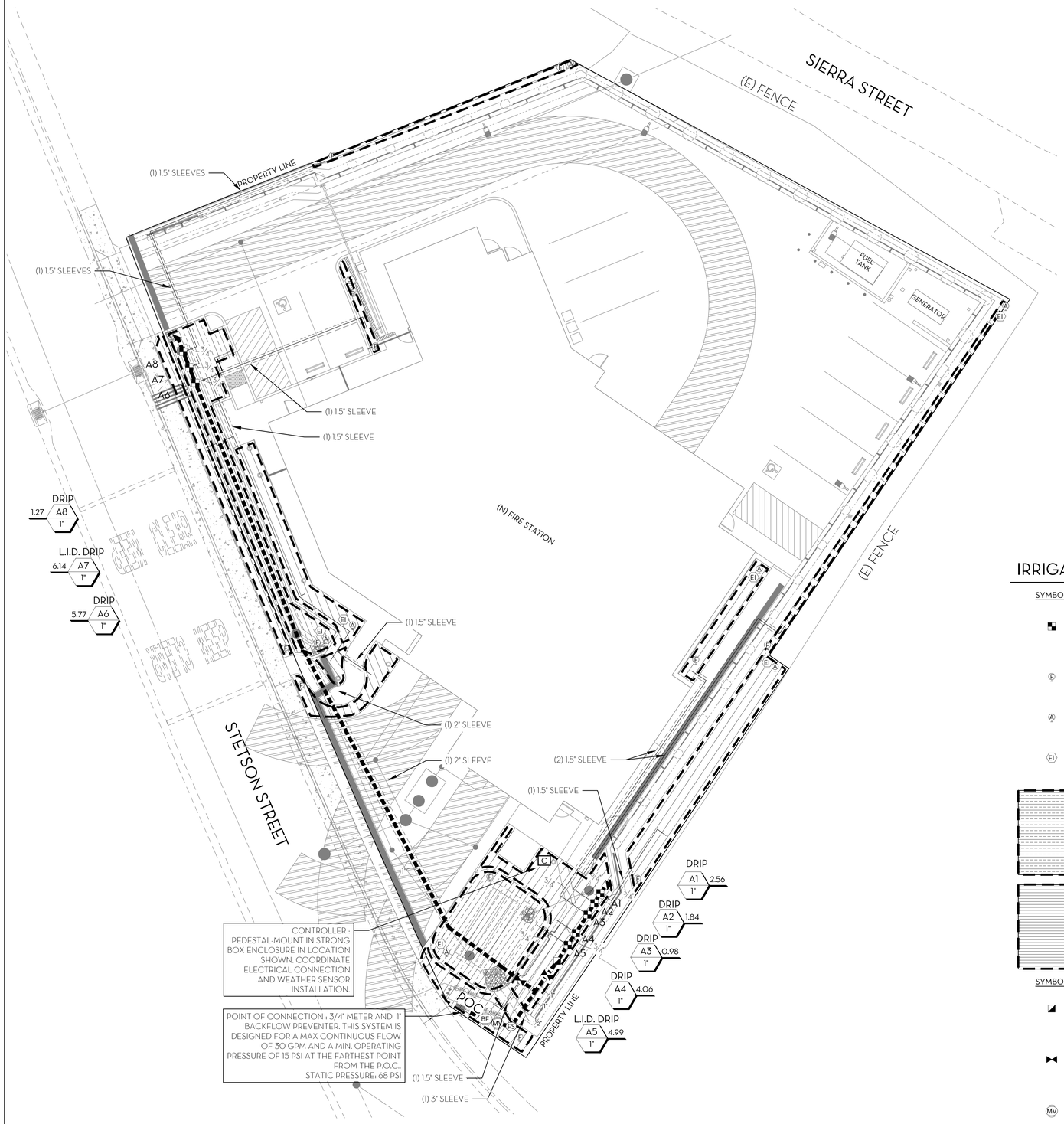

IRRIGATION NOTES

1. THIS DESIGN IS DIAGRAMMATIC. ALL IRRIGATION EQUIPMENT, PIPING, VALVES, ETC... SHOWN WITHIN PAVED AREAS ARE FOR DESIGN PURPOSES ONLY AND SHALL BE INSTALLED IN PLANTING AREAS WHEREVER POSSIBLE. ALL IRRIGATION LINES AND WIRING SHALL BE IN SLEEVING WHEN CROSSING UNDER PAVING.
2. THE 3/4" IRRIGATION WATER METERS ARE CAPABLE OF PROVIDING A MAXIMUM CONTINUOUS FLOW OF 30 GPM. THIS SYSTEM IS DESIGNED TO OPERATE AT 50% OF THE MAXIMUM CONTINUOUS FLOW, OR 15 GPM. NO COMBINATION OF VALVES SHALL BE OPERATED AT THE SAME TIME SO THAT THE COMBINED FLOW EXCEEDS 15 GPM.
3. THIS SYSTEM IS EXPECTED TO MAINTAIN A MINIMUM OPERATING PRESSURE OF 25 PSI AT THE FURTHEST POINTS AWAY FROM THE P.O.C.S THE CONTRACTOR SHALL VERIFY THE AVAILABLE WATER PRESSURE ON THE SITE PRIOR TO INSTALLATION OF THE SYSTEM. REPORT TO THE OWNER AND THE LANDSCAPE ARCHITECT ANY DIFFERENCES BETWEEN THE CONDITIONS ASSUMED ON THESE PLANS AND THE CONDITIONS ON SITE. IN THE EVENT PRESSURE AND/OR FLOW DIFFERENCES ARE NOT REPORTED PRIOR TO THE START OF CONSTRUCTION, THE CONTRACTOR SHALL ASSUME FULL RESPONSIBILITY FOR ANY REVISIONS REQUIRED.
4. IT IS THE RESPONSIBILITY OF THE CONTRACTOR TO FAMILIARIZE HIMSELF WITH ALL GRADE DIFFERENCES, STRUCTURES AND FACILITIES. THE IRRIGATION CONTRACTOR SHALL REPAIR OR REPLACE ALL ITEMS DAMAGED BY HIS WORK. HE SHALL COORDINATE HIS WORK WITH OTHER CONTRACTORS FOR THE LOCATION AND INSTALLATION OF PIPE SLEEVES AND LATERALS AROUND EXISTING AND PROPOSED SITE STRUCTURES AND FACILITIES, UNDER PAVING, ETC...
5. DO NOT WILLFULLY INSTALL THE IRRIGATION SYSTEM AS SHOWN ON THE DRAWINGS WHEN IT IS OBVIOUS IN THE FIELD THAT UNKNOWN OBSTRUCTIONS, GRADE DIFFERENCES OR DIFFERENCES IN THE AREA DIMENSIONS EXIST THAT MIGHT NOT HAVE BEEN CONSIDERED IN THE ENGINEERING. SUCH OBSTRUCTIONS OR DIFFERENCES SHOULD BE BROUGHT TO THE ATTENTION OF THE OWNER'S REPRESENTATIVE. IN THE EVENT THAT THIS NOTIFICATION IS NOT PERFORMED, THE CONTRACTOR SHALL ASSUME FULL RESPONSIBILITY FOR ANY REVISIONS NECESSARY.
6. THE CONTRACTOR SHALL FLUSH AND ADJUST ALL EQUIPMENT AND VALVES FOR OPTIMUM COVERAGE. INSTALL ALL SPRINKLER HEADS WITH NOZZLE OF THE APPROPRIATE DEGREE AND RADIUS FOR THE AREAS TO BE COVERED. ADJUST ADDITIONAL NOZZLES TO ELIMINATE SPRAYING ONTO WALKS, STREETS, WALLS, ETC...
7. ALL IRRIGATION EQUIPMENT NOT OTHERWISE DETAILED OR SPECIFIED SHALL BE INSTALLED PER MANUFACTURER'S RECOMMENDATIONS AND SPECIFICATIONS.
8. PRESSURE REGULATING DEVICES ARE REQUIRED IF WATER PRESSURE EXCEEDS THE RECOMMENDED PRESSURE OF THE SPECIFIED IRRIGATION DEVICES.
9. CHECK VALVES OR ANTI-DRAIN VALVES ARE REQUIRED ON ALL SPRINKLER HEADS WHERE LOW POINT DRAINAGE COULD OCCUR.
10. THE CONTRACTOR SHALL PROVIDE AND PASS A WATER AUDIT BY A CALIFORNIA CERTIFIED LANDSCAPE IRRIGATION AUDITOR, AS REQUIRED BY THE COUNTY'S WATER EFFICIENT LANDSCAPE ORDINANCE PRIOR TO THE INSTALLATION OF PLANT MATERIALS AND MAKE ALL RECOMMENDED CHANGES BEFORE THE START OF THE LANDSCAPE MAINTENANCE PERIOD.
11. CERTIFICATE OF COMPLETION: THE CONTRACTOR SHALL PROVIDE ALL REQUIRED LANDSCAPE DOCUMENTATION TO THE LANDSCAPE ARCHITECT OF RECORD SO THE LANDSCAPE ARCHITECT MAY COMPLETE THE CERTIFICATE OF COMPLETION DOCUMENTATION TO ACHIEVE PERMIT ACCEPTANCE AND SIGN OFF AT THE END OF THE MAINTENANCE PERIOD, AS REQUIRED BY THE COUNTY'S WATER EFFICIENT LANDSCAPE ORDINANCE. THE CONTRACTOR SHALL PROVIDE THE FOLLOWING IRRIGATION DOCUMENTATION:
    A. AS-BUILTS FOR THE IRRIGATION SYSTEM.
    B. A DIAGRAM OF THE IRRIGATION PLAN SHOWING HYDROZONES SHALL BE KEPT WITH THE IRRIGATION CONTROLLER FOR SUBSEQUENT MANAGEMENT PURPOSES.
    C. IRRIGATION AUDIT BY A CALIFORNIA CERTIFIED LANDSCAPE IRRIGATION AUDITOR.
    D. MANUAL DETAILING ALL COMPONENTS AND COMPLETE OPERATION AND MAINTENANCE OF SYSTEM
    E. RECEIPTS FOR SOIL AMENDMENTS MATCHING SOIL ANALYSIS RECOMMENDATIONS.

IRRIGATION SCHEDULE

SYMBOL	MANUFACTURER/MODEL/DESCRIPTION	DETAIL
	HUNTER ICZ-101-25-LF DRIP CONTROL ZONE KIT. 1IN. ICV GLOBE VALVE WITH 1IN. HY100 FILTER SYSTEM. PRESSURE REGULATION: 25 PSI. FLOW RANGE: .5 GPM - 15 GPM. 150 MESH STAINLESS STEEL SCREEN.	G/L2.2
F	HUNTER AFV-B 1/2IN. AUTOMATIC FLUSH VALVE WITH 3/4IN. BARB CONNECTION. REMOVABLE TOP FOR DIAPHRAGM MAINTENANCE.	C/L2.3
A	HUNTER PLD-AVR 1/2IN. MPT CONNECTION WITH 80 PSI MAXIMUM RATING.	D/L2.3
EI	HUNTER ECO-ID ECO-ID: 1/2IN. FPT CONNECTION WITH 12 PSI-70 PSI OPERATING PRESSURE. INSTALL WITH SWING JOINT.	E/L2.3
	AREA TO RECEIVE DRIPLINE HUNTER HDL-06-12-PC HDL-06-12-CV: HUNTER DRIPLINE W/ 0.6 GPH EMITTERS AT 12" O.C. CHECK VALVE, DARK BROWN TUBING WITH GRAY STRIPING. DRIPLINE LATERALS SPACED AT 12" APART, WITH EMITTERS OFFSET FOR TRIANGULAR PATTERN. INSTALL WITH HUNTER PLD BARBED OR PLD-LOC FITTINGS.	B/L2.3
	AREA TO RECEIVE DRIPLINE HUNTER HDL-06-18-CV HDL-06-18-CV: HUNTER DRIPLINE W/ 0.6 GPH EMITTERS AT 18" O.C. CHECK VALVE, DARK BROWN TUBING WITH GRAY STRIPING. DRIPLINE LATERALS SPACED AT 18" APART, WITH EMITTERS OFFSET FOR TRIANGULAR PATTERN. INSTALL WITH HUNTER PLD BARBED OR PLD-LOC FITTINGS.	B/L2.3

SYMBOL	MANUFACTURER/MODEL/DESCRIPTION	DETAIL
BF	SUPERIOR AVB 1" INSTALL 1IN. RED BRASS ATMOSPHERIC VACUUM BREAKER/ BACKFLOW PREVENTION DEVICE PER MWSD SD-05.	N/A
C	HUNTER HCC-800-SS 8 STATION OUTDOOR WI-FI ENABLED, FULL-FUNCTIONING CONTROLLER WITH TOUCHSCREEN. STAINLESS STEEL CABINET.	N/A
NOT SHOWN	HUNTER WRF-CLIK RAIN/FREEZE SENSOR, INSTALL WITHIN 1000 FT OF CONTROLLER, IN LINE OF SIGHT. 22-28 VAC/VDC 100 MA POWER FROM TIMER TRANSFORMER. INSTALL ON 14' POLE OR ON SOUTH OR WEST EAVE OF BUILDING.	N/A
FS	CREATIVE SENSOR TECHNOLOGY FSI-110-001 1IN. PVC TEE TYPE FLOW SENSOR W/SOCKET ENDS, CUSTOM MOUNTING TEE AND ULTRA-LIGHTWEIGHT IMPELLER ENHANCES LOW FLOW MEASUREMENT. 2 WIRE DIGITAL OUTPUT COMPATIBLE W/ALL IRRIGATION CONTROLLERS. FLOW RANGE: .86 GPM - 52 GPM.	D/L2.2
POC	POINT OF CONNECTION 3/4" WATER METER & 1" BACKFLOW PREVENTOR, REFER TO CIVIL IMP. PLANS FOR MORE INFORMATION.	
	IRRIGATION LATERAL LINE: PVC CLASS 200 SDR 21	A/L2.2
	IRRIGATION MAINLINE: PVC SCHEDULE 40	A/L2.2
	PIPE SLEEVE: PVC SCHEDULE 40 SIZE TO BE 2X TOTAL OF PIPE DIAMETER. INSTALL UNDER ALL NEW PAVING AND EXTEND 12" BEYOND HARDSCAPE EDGES.	

SYMBOL	MANUFACTURER/MODEL/DESCRIPTION	DETAIL
	HUNTER HQ-44LRC QUICK COUPLING VALVE, YELLOW RUBBER LOCKING COVER, RED BRASS AND STAINLESS STEEL, WITH 1IN. NPT INLET, 2-PIECE BODY.	F/L2.2
	NIBCO T-113 CLASS 125 BRONZE GATE SHUT OFF VALVE WITH WHEEL HANDLE, SAME SIZE AS MAINLINE PIPE DIAMETER AT VALVE LOCATION. SIZE RANGE - 1/4IN. - 3IN.	E/L2.2
MV	HUNTER ICV-G (MV) 1" PLASTIC ELECTRIC MASTER VALVE, GLOBE CONFIGURATION, WITH NPT THREADED INLET/OUTLET,	C/L2.2

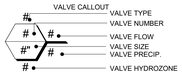

WATER EFFICIENT LANDSCAPE ORDINANCE COMPLIANCE

I HAVE COMPLIED WITH THE CRITERIA OF THE ORDINANCE AND APPLIED THEM FOR THE EFFICIENT USE OF WATER IN THE IRRIGATION DESIGN PLAN.

KEITH P. WILSON, ASLA, CRLA 4728

0' 5' 10'
(1" = 10'-0")

PBK

ARCHITECT PBK Architects, Inc.
PBK.com

SAN LUIS OBISPO
1327 Archer Street, Suite 110
San Luis Obispo, CA 93401
805-329-3076

wilson design studio
Wilson Design Studio Landscape Architecture
2020 I Street, Suite 220
Sacramento, CA 95811
916.524.3614 | www.wdsla.com

FIRE STATION #44
COASTSIDE FIRE PROTECTION DISTRICT

501 STETSON STREET
MOSS BEACH, CA 94038
BID SET

BID SET

KEY PLAN

PLAN NORTH TRUE NORTH

REGISTERED LANDSCAPE ARCHITECT
KEITH P. WILSON
No. 4728
Signature
EXPIRATION DATE: MAY 30, 2027
STATE OF CALIFORNIA

CLIENT
COASTSIDE FIRE PROTECTION DISTRICT

PROJECT NUMBER
230137

DATE 09/17/2026

DRAWN BY: CW CHKED BY: JM

REVISIONS

#	DESCRIPTION	DATE

IRRIGATION PLAN & NOTES

L2.0

SAN MATEO COUNTY

LANDSCAPE DOCUMENT PACKAGE
PROJECT INFORMATION SHEET

APPLICANT INFORMATION:

SUBMITTAL DATE	9/17/2026				
PROJECT NAME	COASTSIDE FIRESTATION #44				
NAME OF PROJECT APPLICANT		TITLE	PROJECT MANAGER		
CONNOR WATERS		COMPANY	WDSLA		
TELEPHONE NO.	209-834-4094	FAX NO.			
EMAIL ADDRESS	CONNOR@WDSLA.COM				
STREET ADDRESS	2020 I STREET, SUITE 220				
CITY	SACRAMENTO	STATE	CA	ZIP CODE	95811

PROPERTY OWNER OR HIS/HER DESIGNEE:

NAME OF PROPERTY OWNER		TITLE	DIVISION CHIEF - SAN MATEO DIVISION		
GARY SILVA		COMPANY	COASTSIDE FIRE OPERATIONS		
TELEPHONE NO.	650.740.7249	FAX NO.			
EMAIL ADDRESS	GARYSILVA@FIRE.CA.GOV				
STREET ADDRESS	1191 MAIN STREET				
CITY	HALF MOON BAY	STATE	CA	ZIP CODE	94019

PROPERTY ADDRESS AND LOCATION:

STREET ADDRESS	501 STETSON STREET			PARCEL NO.	37063380
CITY	MOSS BEACH	STATE	CA	ZIP CODE	94038

PROJECT INFORMATION:

PROJECT TYPE/DESCRIPTION	COMMERCIAL		
WATER PURVEYOR	MONTARA WATER & SANITARY DISTRICT		
TOTAL LANDSCAPE AREA (SF)	2782	WATER SUPPLY TYPE	POTABLE

CHECK THOSE ITEMS THAT ARE INCLUDED AS PART OF THIS PACKAGE:

X	PROJECT INFORMATION (ABOVE)
X	WATER EFFICIENT LANDSCAPE WORKSHEET
	SOIL ANALYSIS REPORT (REFER TO CIVIL IMPROVEMENT PLANS)
X	LANDSCAPE PLAN
X	IRRIGATION PLAN
X	GRADING PLAN (REFER TO CIVIL IMPROVEMENT PLANS)

I AGREE TO COMPLY WITH THE REQUIREMENTS OF THE YOLO COUNTY'S WATER EFFICIENT LANDSCAPEORDINANCE AND HEREBY SUBMIT A COMPLETE LANDSCAPE DOCUMENTATION PACKAGE.

APPLICANT SIGNATURE DATE

A PROJECT INFORMATION
NO SCALE P-PU-COA-17

COASTSIDE FIRE STATION #44, 501 STETSON STREET, MOSS BEACH, CA 94038
WATER EFFICIENT LANDSCAPE WORKSHEET
(APN 370-6338-0)

REGULAR LANDSCAPE AREAS								
VALVE NUMBER	IRRIGATION METHOD	PLANT WATER USE	PLANT FACTOR (PF)	IRRIGATION EFFICIENCY (IE)	LANDSCAPE AREA (SF)	ETAF (PF/IE)	ETAF x AREA	ETWU
A1	DRIP	LOW	0.2	0.81	384	0	95	2,269
A2	DRIP	LOW	0.2	0.81	136	0	34	804
A3	DRIP	LOW	0.2	0.81	119	0	29	703
A4	DRIP	LOW	0.2	0.81	590	0	146	3,486
A5	DRIP	LOW	0.2	0.81	392	0	97	2,316
A6	DRIP	LOW	0.2	0.81	630	0	156	3,723
A7	DRIP	LOW	0.2	0.81	433	0	107	2,559
A8	DRIP	LOW	0.2	0.81	98	0	24	579
TOTALS:				(A)	2,782	(B)	687	16,439

SPECIAL LANDSCAPE AREAS								
VALVE NUMBER	IRRIGATION METHOD	PLANT WATER USE	PLANT FACTOR (PF)	IRRIGATION EFFICIENCY (IE)	LANDSCAPE AREA (SF)	ETAF (PF/IE)	ETAF x AREA	ETWU
N/A	N/A	N/A	0	0.00	0	1	0	0
TOTALS:				(C)	0	(D)	0	0

TOTAL AREA:	2,782

ETO:	38.60
ETAF:	0.45

ETWU = (ETO x 0.62 x ETAF x AREA)
MAWA = (ETO x 0.62 [(ETAF x LA) + (1- ETAF) x SLA)]

ETWU TOTAL:	16,439
MAWA TOTAL:	29,960

ETWU < MAWA

*ETAF IS 0.55 FOR RESIDENTIAL APPLICATIONS AND 0.45 FOR COMMERCIAL APPLICATIONS.
*TREE AREA IS CALCULATED BY THE AREA COVERED BY ROOT BALL IRRIGATION (28 SF EA.)

ETAF CALCULATIONS		
REGULAR LANDSCAPE AREAS		
TOTAL ETAF x AREA	(B)	687
TOTAL AREA	(A)	2,782
AVAERAGE ETAF	(B) / (A) =	0.25
ALL LANDSCAPE AREAS		
TOTAL ETAF x AREA	(B + D)	687
TOTAL AREA	(A + C)	2,782
SITEWIDE ETAF	(B + D) / (A + C) =	0.25

B WATER EFFICIENT LANDSCAPE WORKSHEET
NO SCALE P-PU-COA-10

NOTE:

BECAUSE SIGNIFICANT MASS GRADING OF THE PROJECT SITE IS PLANNED, A SOIL ANALYSIS WILL BE ADMINISTERED AFTER MASS GRADING HAS BEEN COMPLETED AND BEFORE SOIL PREPARATION OF PLANTING AREAS HAS BEGUN. INFORMATION PROVIDED BY THE SOIL ANALYSIS WILL DETERMINE ANY NECESSARY ADJUSTMENTS TO BASE BID SOIL AMENDMENTS CURRENTLY PROVIDED IN SPECIFICATION BOOKLET FORM. A COPY OF THE SOIL ANALYSIS WILL BE SUBMITTED AS PART OF THE LANDSCAPE CERTIFICATE OF COMPLETION REQUIRED FOR PERMIT ACCEPTANCE AND SIGNOFF AND WILL INCLUDE, AT A MINIMUM, THE FOLLOWING INFORMATION:

1. SOIL TEXTURE
2. INFILTRATION RATE
3. PH
4. TOTAL SOLUBLE SALTS
5. SODIUM
6. PERCENT ORGANIC MATTER
7. RECOMMENDATIONS

C SOIL MANAGEMENT REPORT
NOT TO SCALE P-PU-COA-15

NOTE:

BECAUSE PROPER SCHEDULING OF IRRIGATION RUN TIMES RELIES ON SOIL TEXTURE AND INFILTRATION RATE INFORMATION, COMPREHENSIVE IRRIGATION SCHEDULES WILL BE COMPLETED AFTER THE SOIL ANALYSIS HAS BEEN ADMINISTERED. THE COMPLETED IRRIGATION SCHEDULES WILL BE SUBMITTED AS PART OF THE LANDSCAPE CERTIFICATE OF COMPLETION AS REQUIRED FOR PERMIT ACCEPTANCE AND SIGN OFF.

D IRRIGATION SCHEDULING
NOT TO SCALE P-PU-COA-14

COASTSIDE FS #44: WORST CASE SCENARIO PRESSURE LOSS

VALVE:	COMBO
VALVE GPM:	15.0
ELEVATION GAIN/LOSS:	18
STATIC PRESSURE (PSI):	68

EQUIPMENT/PIPING	SIZE	FLOW (GPM)	LINEAR FEET	PRESSURE LOSS (PSI)/100 LF	TOTAL PRESSURE LOSS (PSI)	REMAINING PRESSURE (PSI)
WATER METER	3/4"	15.0	N/A	-	3.6	64.4
BACKFLOW PREVENTOR	1"	18.0	N/A	-	12	52.4
MASTER VALVE (or GATE VALVE)	1"	15.0	N/A	-	3	61.4
FLOW SENSOR	1"	15.0	N/A	-	1	60.4
SCH. 40 PVC MAIN LINE	1"	15.0	175	1.36	2.38	58.0
IRR VALVE	1"	22	N/A	-	4.75	53.3
CLASS 200 PVC LATERAL LINE	3/4"	2.2	72	0.24	0.1728	53.1
ELEVATION PRESSURE LOSS @ 0.43 PSI/FOOT OF HEAD				0.43	7.74	45.4
15% PRESSURE LOSS TO ACCOUNT FOR FITTINGS/TURNS					6.8	38.6

PRESSURE REQUIRED TO OPERATE HEAD/EQUIPMENT:	25
PRESSURE AVAILABLE:	38.6

E PRESSURE LOSS CALCULATION
NO SCALE P-PU-COA-97

WATER EFFICIENT LANDSCAPE ORDINANCE COMPLIANCE

I HAVE COMPLIED WITH THE CRITERIA OF THE ORDINANCE AND APPLIED THEM FOR THE EFFICIENT USE OF WATER IN THE IRRIGATION DESIGN PLAN.

KEITH P. WILSON, ASLA, CRLA 4728

PBK

ARCHITECT PBK Architects, Inc.
PBK.com
SAN LUIS OBISPO
1327 Archer Street, Suite 110
San Luis Obispo, CA 93401
805-329-3076

wilson design studio
Wilson Design Studio Landscape Architecture
2020 I Street, Suite 220
Sacramento, CA 95811
916.524.5614 | www.wdsla.com

FIRE STATION #44
COASTSIDE FIRE PROTECTION DISTRICT

501 STETSON STREET
MOSS BEACH, CA 94038
BID SET

BID SET

KEY PLAN
PLAN NORTH TRUE NORTH

REGISTERED LANDSCAPE ARCHITECT
KEITH P. WILSON
No. 4728
Signature
EXPIRATION DATE: MAY 30, 2027
STATE OF CALIFORNIA

CLIENT
COASTSIDE FIRE PROTECTION DISTRICT
PROJECT NUMBER
230137
DATE 09/17/2026
DRAWN BY: CW CHKED BY: JM
REVISIONS

#	DESCRIPTION	DATE

IRRIGATION DETAILS

L2.1

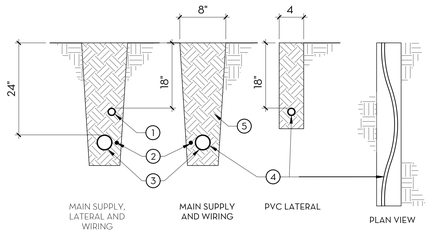

KEY NOTES
1. IRRIGATION LATERAL.
2. WIRING: TAPE AND BUNDLE WIRING AT 10'-0" INTERVALS. COMMON TRENCHING OF IRRIGATION PIPE AND REMOTE CONTROL VALVE WIRING TO BE DONE WHEREVER POSSIBLE (INSTALL TRACE WIRE ALONG ALL MAIN LINE PIPE THAT DOES NOT HAVE CONTROL WIRES ADJACENT TO PIPE.
3. MAIN LINE: ALL MAIN LINE TO BE INSTALLED IN ACCORDANCE WITH MANUFACTURER'S SPECIFICATIONS. MAINTAIN 4" SPACE BETWEEN PARALLEL PIPE LINES AND 6" VERTICAL SPACE BETWEEN MAIN LINE AND LATERAL LINES. WIRING AND MAIN LINE TO BE AT SAME MINIMUM DEPTH OF 24".
4. ALL PVC PIPE TO BE CENTERED IN TRENCHES OR SNAKED AS NECESSARY TO ACCOMMODATE UNTRUE ALIGNMENT.
5. BACKFILL, SEE SPECS.
6. ALL PIPING UNDER PAVING SHALL BE SLEEVED.

A TRENCHING DETAIL
NOT TO SCALE — P-PU-COA-45

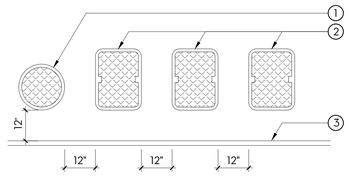

KEY NOTES
1. QUICK COUPLING VALVE IN ROUND VALVE BOX.
2. CANTER VALVE BOX OVER REMOTE CONTROL VALVE TO FACILITATE SERVICING VALVE.
3. EDGE OF PLANTER.

NOTES
A. SET REMOTE CONTROL VALVE ASSEMBLY IN GROUND COVER / SHRUB AREA WHERE POSSIBLE. INSTALL IN LAWN ONLY IF GROUND COVER DOES NOT EXIST ADJACENT TO LAWN.
B. SET BOXES PARALLEL TO EACH OTHER AND PERPENDICULAR TO EDGE.
C. AVOID HEAVILY COMPACTING SOIL AROUND VALVE BOXES TO PREVENT COLLAPSE AND DEFORMATION OF VALVE BOX SIDES.
D. HEAT EMBOSS LIDS SHALL BE MARKED AS SUCH (E.G., IRRIGATION VALVE #, QC, GV, ETC.).
E. 1 VALVE PER BOX.

B VALVE BOX LAYOUT
NOT TO SCALE — P-PU-COA-41

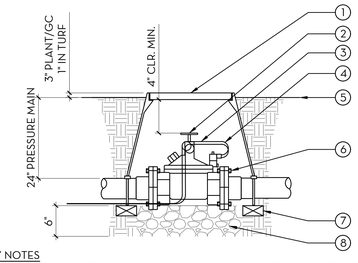

KEY NOTES
1. PLASTIC VALVE BOX. CARSON 910 PLASTIC VALVE BOX WITH BOLT DOWN LID (OR EQUAL) AND BOX EXTENSION IF REQUIRED REFER TO SPECS.
2. MASTER CONTROL VALVE. SEE IRRIGATION LEGEND FOR PRODUCT INFORMATION
3. PIG TAIL EXPANSION LOOP (MIN. 18").
4. CONTROL & COMMON WIRES.
5. FINISH GRADE (1/2" IN TURF SEED, 1" IN TURF SOD, 3-1/2" IN PLANTER BEDS BELOW ADJACENT HARDSCAPE, TYP.)
6. SCH. 80 PVC FLANGES TYP. (2) PLACES.
7. STD. RED BRICKS TYP. (2) PLACES.
8. 3/4" DIAMETER DRAIN ROCK.

NOTES
A. VALVE SHALL BE LINE SIZED UNLESS OTHERWISE NOTED.
B. INSTALL VALVES A MINIMUM OF 12" FROM STRUCTURES OR HARDSCAPING.
C. INSTALL VALVES IN PLANTING BEDS WHEREVER POSSIBLE.
D. PLACE VALVE BOX AT RIGHT ANGLES TO STRUCTURES OR HARDSCAPING.
E. INSTALL VALVE BOX SO THAT TOP OF VALVE BOX IS FLUSH WITH ADJACENT HARDSCAPING.
F. PLACE 3/4" DIAMETER DRAIN ROCK PRIOR TO INSTALLATION OF VALVE BOX.

C MASTER VALVE
NOT TO SCALE — P-PU-COA-30

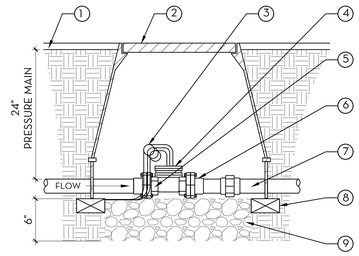

KEY NOTES
1. FINISH GRADE (1/2" IN TURF SEED, 1" IN TURF SOD, 3-1/2" IN PLANTER BEDS BELOW ADJACENT HARDSCAPE, TYP.)
2. PLASTIC VALVE BOX
3. PIG TAIL EXPANSION LOOP (MIN. 18").
4. FLOW SENSOR. USE WITH PULSE OUTPUT TRANSMITTER OR FLOW MONITOR. (SEE IRRIGATION LEGEND)
5. COMMUNICATION CABLE. RETURN TO CONTROLLER WITHIN 1" GREY SCHEDULE 40 PVC CONDUIT.
6. SCHEDULE 80 PVC FLANGES, TYP. (2) PLACES.
7. SCHEDULE 80 PVC UNION DOWNSTREAM OF VALVE.
8. BRICK TYP. (2) PLACES.
9. 3/4" DIAMETER DRAIN ROCK BELOW VALVE.

NOTES
A. INSTALL FLOW SENSOR A MINIMUM OF 12" FROM STRUCTURES OR HARDSCAPING.
B. INSTALL FLOW SENSOR IN PLANTING BEDS WHEREVER POSSIBLE.
C. PLACE VALVE BOX AT RIGHT ANGLES TO STRUCTURES OR HARDSCAPING.
D. INSTALL VALVE BOX SO THAT TOP OF VALVE BOX IS FLUSH WITH ADJACENT HARDSCAPING.
E. PLACE 3/4" DIAMETER DRAIN ROCK PRIOR TO INSTALLATION OF VALVE BOX.
F. REDUCE BENDS, FITTINGS, ETC. FOR DISTANCE EQUAL TO 10X DIAMETER OF PIPE ON BOTH SIDES OF SENSOR.

D FLOW SENSOR
NOT TO SCALE — P-PU-COA-06

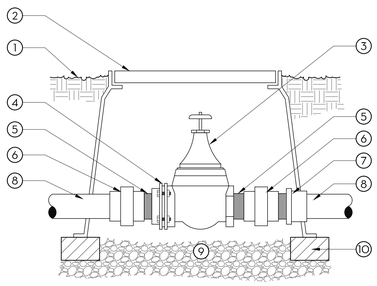

KEY NOTES
1. FINISHED GRADE (1/2" IN SEED, 1" IN SOD, 3-1/2" IN PLANTER BEDS) BELOW LID.
2. CARSON 910 PLASTIC VALVE BOX WITH BOLT DOWN LID (OR EQ.). HEAT BRAND GV ON COVER.
3. GATE VALVE (SEE IRRIGATION LEGEND).
4. METAL FLANGE TO MATCH VALVE MATERIAL (2-1/2" AND LARGER).
5. SCH. 80 PVC NIPPLE.
6. PVC UNION.
7. FEMALE ADAPTER
8. MAIN LINE
9. 6" MIN. DEPTH OF 3/4" DIA. CRUSHED DRAIN ROCK.
10. STANDARD RED BRICK (2 PLACES).

NOTES
A. INSTALL 12" MAX. FROM PAVING, MOWSTRIPS OR HEADERS.

E GATE VALVE
NOT TO SCALE — P-PU-COA-07

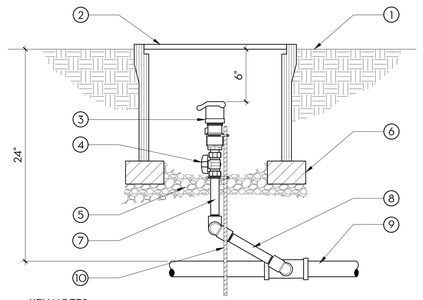

KEY NOTES
1. FINISHED GRADE (1/2" IN SEED, 1" IN SOD, 3-1/2" IN PLANTER BEDS) BELOW LID.
2. CARSON 910 PLASTIC VALVE BOX WITH BOLT DOWN LID (OR EQUAL). HEAT BRAND QVC ON COVER.
3. QUICK COUPLING VALVE (SEE IRRIGATION LEGEND).
4. 1" PVC BALL VALVE.
5. 6" MIN. DEPTH OF 3/4" DIA. CRUSHED DRAIN ROCK.
6. STANDARD RED BRICK (TYP. OF 2).
7. 1" SCH. 40 PVC RISER.
8. RAINBIRD TSJ SWING JOINT (OR EQUAL); 8" OR 12" AS NEEDED
9. PVC MAINLINE.
10. #4 REBAR STAKE, 36" IN LENGTH. FASTEN QUICK COUPLING VALVE TO REBAR WITH (2) STAINLESS STEEL WORM GEAR CLAMPS

NOTES
A. INSTALL 12" MAX. FROM PAVING, MOWSTRIPS OR HEADERS.

F QUICK COUPLING VALVE
NOT TO SCALE — P-PU-COA-27

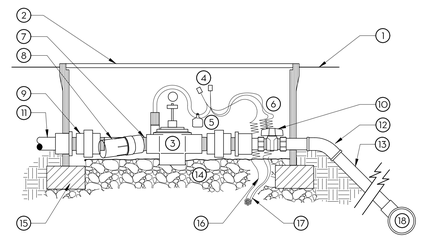

KEY NOTES
1. FINISHED GRADE (1/2" IN SEED, 1" IN SOD, 3-1/2" IN PLANTER BEDS) BELOW LID.
2. JUMBO PLASTIC VALVE BOX (26.3"X19.8") WITH BOLT DOWN LID (OR EQUAL). HEAT BRAND RCV AND VALVE NUMBER ON COVER. SEE IRRIGATION PLANS AND LEGEND FOR LOCATIONS AND VALVE NUMBERS.CONTRACTOR TO ENSURE THAT REMOTE CONTROL VALVE, BALL VALVE, AND THREADED UNIONS ARE CONTAINED WITHIN JUMBO VALVE BOX.
3. REMOTE CONTROL VALVE (SEE IRRIGATION LEGEND) W/ POLYURETHANE ID TAG ATTACHED TO THE VALVE CONTROL WIRE BY T. CHRISTY ENTERPRISES (OR EQUAL). SEE IRRIGATION PLANS AND LEGEND FOR LOCATIONS AND VALVE NUMBERS).
4. UL LISTED WATERPROOF CONNECTORS, TYP.
5. I.D. TAG.
6. LEAVE 24" EXCESS WIRE IN EACH VALVE BOX. WRAP AROUND 1/2" PIPE TO CREATE COILS.
7. SCH. 80 PVC NIPPLE W/FEMALE ADAPTERS.
8. FILTER
9. SCH. 80 PVC UNION, BOTH SIDES OF VALVE ASSEMBLY.
10. PVC BALL VALVE UPSTREAM OF REMOTE CONTROL VALVE OR PLACE ON MANIFOLD AS PER IRRIGATION PLANS..
11. PVC LATERAL TO ZONE DISTRIBUTION (SEE IRRIGATION PLANS).
12. SCH. 80 PVC 45° ELL.
13. SCH. 80 PVC NIPPLE EXTENSION TO MAINLINE.
14. 6" MIN. DEPTH OF 3/4" DIA. CRUSHED DRAIN ROCK.
15. STANDARD RED BRICK (TYP. OF 4).
16. CONTROL WIRE FROM CONTROLLER.
17. COMMON WIRES.
18. PVC MAINLINE & FITTINGS.

G DRIP REMOTE CONTROL VALVE
NOT TO SCALE — P-PU-COA-08

PBK
ARCHITECT PBK Architects, Inc.
PBK.com
SAN LUIS OBISPO
1327 Archer Street, Suite 110
San Luis Obispo, CA 93401
805-329-3076

wilson design studio
Wilson Design Studio Landscape Architecture
2020 I Street, Suite 220
Sacramento, CA 95811
916.324.5614 | www.wdsla.com

FIRE STATION #44
COASTSIDE FIRE PROTECTION DISTRICT

501 STETSON STREET
MOSS BEACH, CA 94038
BID SET

BID SET

KEY PLAN
PLAN NORTH — TRUE NORTH

REGISTERED LANDSCAPE ARCHITECT
KEITH P. WILSON
No. 4728
Signature
EXPIRATION DATE: MAY 30, 2027
STATE OF CALIFORNIA

CLIENT
COASTSIDE FIRE PROTECTION DISTRICT
PROJECT NUMBER
230137
DATE 09/17/2026
DRAWN BY: CW CHKED BY: JM
REVISIONS

#	DESCRIPTION	DATE

IRRIGATION DETAILS

L2.2

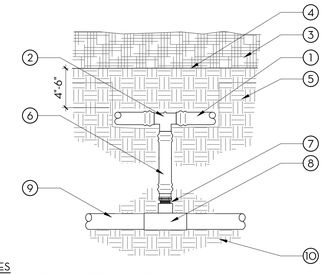

KEY NOTES
1. IN-LINE DRIP TUBING (SEE IRRIGATION LEGEND).
2. DRIP TUBING TEE FITTING (17MM BARB X BARB).
3. 3" LAYER OF BARK MULCH.
4. FINISHED GRADE IN PLANTER BEDS 5" BELOW ADJACENT HARDSCAPE, TYP.
5. 4"-6" LAYER OF BACKFILL OVER DRIPLINE.
6. BLANK DRIP TUBING.
7. NPT TO 3/4" PIPE ADAPTER (3/4" MPT X 17MM BARB).
8. 3/4" FPT TEE.
9. PVC LATERAL SUPPLY.
10. SUBGRADE.

NOTES
A. SEE IRRIGATION LEGEND FOR IN-LINE DRIP TUBING SPACING.
B. STAKE TUBING DOWN EVERY 5' AND WITHIN 1' OF ALL FITTING OUTLETS.
C. USE BLANK IN-LINE DRIP TUBING FOR LATERAL AND NON-PVC LAYOUT CONNECTIONS.

A IN-LINE DRIP SUB-GRADE START CONNECTION

NOT TO SCALE P-PU-COA-25

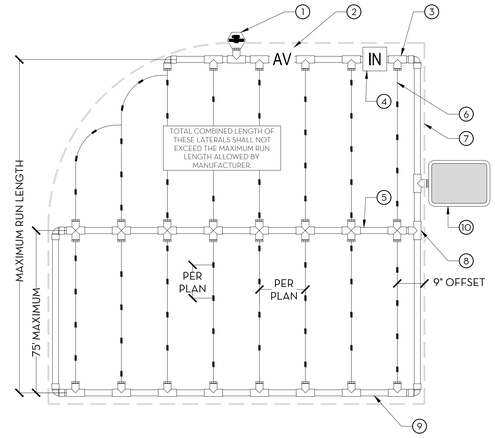

NOTES
A. INSTALLATION TO BE COMPLETED IN ACCORDANCE WITH MANUFACTURER'S SPECIFICATIONS.
B. AIR RELIEF VALVE SHALL BE INSTALLED IN VALVE BOX AT OPTIMAL HIGHEST POINT FROM THE REMOTE CONTROL VALVE. MULTIPLE AIR RELIEF VALVES MAY BE NECESSARY TO ACCOMMODATE DIFFERENCES IN GRADE.
C. OPERATION INDICATOR TO BE INSTALLED AT OPTIMAL FURTHEST POINT FROM REMOTE CONTROL VALVE IN CLEAR VIEW WHEN POPPED UP.
D. FLUSH POINT TO BE INSTALLED AT OPTIMAL FURTHEST POINT FROM REMOTE CONTROL VALVE TO ALLOW FOR MAXIMUM DEBRIS FLUSH IN SYSTEM.
E. RESUPPLY HEADERS SHALL BE PROVIDED AT A MAXIMUM OF 75' O.C. SPACING THROUGHOUT ENTIRE HYDROZONE.
F. TOTAL COMBINED LENGTH OF THESE LATERALS SHALL NOT EXCEED THE MAXIMUM RUN LENGTH ALLOWED BY MANUFACTURER.

KEY NOTES
1. FLUSH VALVE IN VALVE BOX PER PLAN
2. AIR RELIEF VALVE PER PLAN
3. PVC OR APPROVED EQUAL FLUSH HEADER WITH FITTINGS
4. OPERATION INDICATOR PER PLAN
5. PVC OR APPROVED EQUAL RESUPPLY HEADER WITH FITTINGS
6. DRIPLINE LATERAL PER PLAN
7. LANDSCAPE PLANTING EDGE OR EDGE OF PAVEMENT, SEE PLAN
8. INSERT / COMPRESSION FITTING or RISER ASSEMBLY PER PLAN
9. PVC or APPROVED EQUAL SUPPLY HEADER WITH FITTINGS
10. REMOTE CONTROL VALVE PER PLAN

B IN-LINE DRIP IRRIGATION WITH LATERALS

NOT TO SCALE P-PU-COA-37

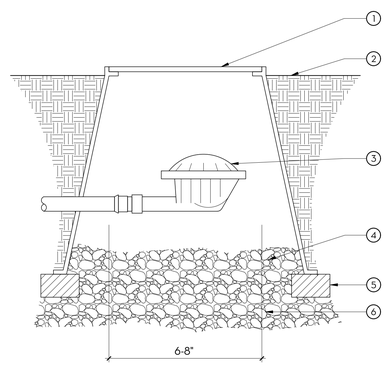

KEY NOTES
1. CARSON 910 PLASTIC VALVE BOX WITH BOLT DOWN LID (OR EQUAL).
2. FINISH GRADE (1/2" IN SEED, 1" IN SOD, 3-1/2" IN PLANTER BEDS) BELOW LID.
3. LINE FLUSH VALVE. (SEE IRRIGATION LEGEND)
4. 6" MIN. DEPTH OF 3/4" DIA. CRUSHED DRAIN ROCK.
5. STANDARD RED BRICK (TYP. OF 2).
6. 6" TO 8" DIAMETER POST HOLE, 24" DEEP MINIMUM.

C FLUSH VALVE

NOT TO SCALE P-PU-COA-09

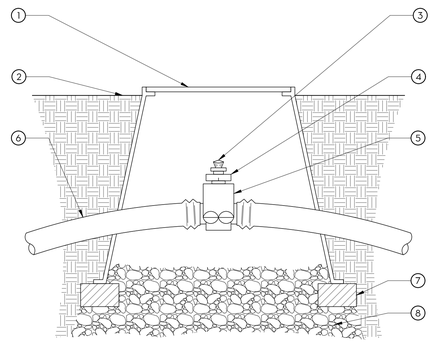

KEY NOTES
1. CARSON 708 PLASTIC VALVE BOX WITH BOLT DOWN LID (OR EQUAL).
2. FINISH GRADE.
3. AIR RELIEF VALVE (SEE IRRIGATION LEGEND).
4. REDUCER BUSHING.
5. 180 2-WAY ADAPTER.
6. DRIPLINE.
7. STANDARD RED BRICK (TYP. OF 2).
8. 6" MIN. DEPTH OD 3/4" DIA. CRUSHED DRAIN ROCK.

NOTES
A. INSTALL ON HIGHEST ELEVATION OF ZONE.

D AIR RELIEF VALVE

NOT TO SCALE P-PU-COA-23

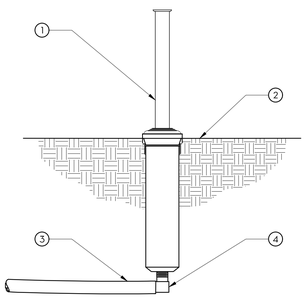

KEY NOTES
1. POPUP INDICATOR
2. FINISH GARDE
3. DRIP TUBING
4. 1/2" NPT CONNECTION

NOTES
A. INSTALL AT FARTHEST POINT FROM VALVE.

E ECO-INDICATOR

NOT TO SCALE P-PU-COA-05

PBK
ARCHITECT PBK Architects, Inc.
PBK.com
SAN LUIS OBISPO
1327 Archer Street, Suite 110
San Luis Obispo, CA 93401
805-329-3076

wilson design studio
Wilson Design Studio Landscape Architecture
2020 I Street, Suite 220
Sacramento, CA 95811
916.524.5614 | www.wdsla.com

FIRE STATION #44
COASTSIDE FIRE PROTECTION DISTRICT

501 STETSON STREET
MOSS BEACH, CA 94038
BID SET

BID SET

KEY PLAN
PLAN NORTH TRUE NORTH

REGISTERED LANDSCAPE ARCHITECT
KEITH P. WILSON
No. 4728
Signature
EXPIRATION DATE: MAY 30, 2027
STATE OF CALIFORNIA

CLIENT
COASTSIDE FIRE PROTECTION DISTRICT
PROJECT NUMBER
230137
DATE 09/17/2026
DRAWN BY: CW CHKED BY: JM
REVISIONS

#	DESCRIPTION	DATE

IRRIGATION DETAILS

L2.3

D1.1 - DEMOLITION SITE PLAN

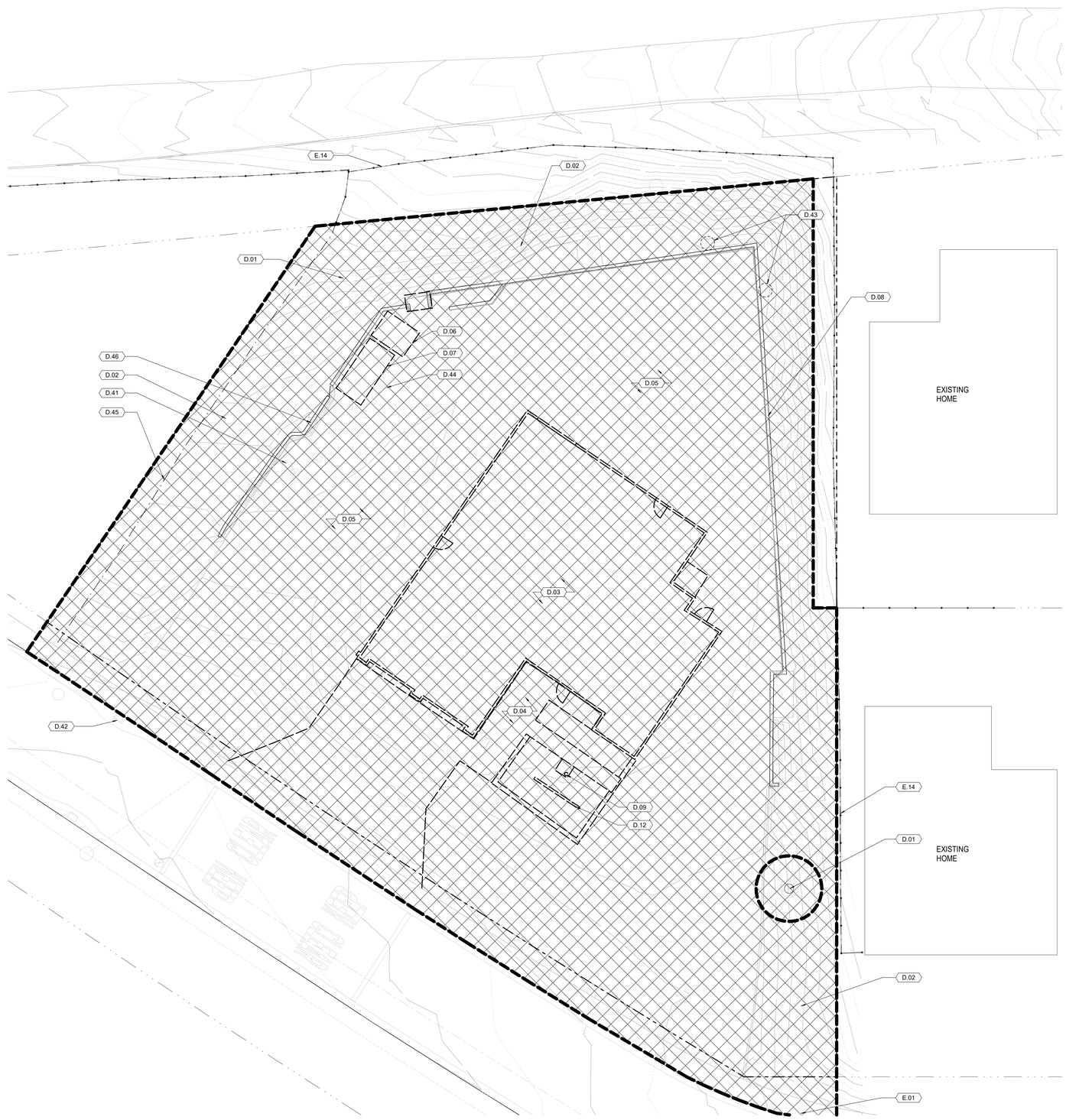

N PLAN NORTH
N TRUE NORTH

1 DEMOLITION SITE PLAN
SCALE: 1" = 10'-0"

DEMOLITION LEGEND

- EXISTING ITEM TO BE DEMOLISHED
- EXISTING CHAIN LINK FENCING TO REMAIN
- EXISTING TREE TO BE REMOVED
- PROPERTY LINE

KEYNOTES

D.01	REMOVE (E) TREE AND ROOTS IN THEIR ENTIRETY
D.02	REMOVE (E) LANDSCAPING
D.03	REMOVE (E) BUILDING INCLUDING FOUNDATION / UTIL.
D.04	REMOVE (E) SITE PAVEMENT, SIDEWALK, CURBS, GUTTERS, STEPS
D.05	REMOVE (E) ASHPALT
D.06	REMOVE (E) ABOVE GROUND TANK, SEE FUEL TANK NOTES
D.07	REMOVE (E) GENERATOR AND RELOCATE, SEE GENERATOR NOTES
D.08	REMOVE (E) RETAINING WALLS AND FOUNDATION
D.09	REMOVE (E) FLAG POLE
D.12	REMOVE (E)
D.41	REMOVE (E) BUILDING FIRE DEPT CONNECTION
D.42	REMOVE (E) STORM CATCH BASIN
D.43	REMOVE (E) PP ANTENNA, OWNER HAS FIRST SALVAGE RIGHTS
D.44	REMOVE (E) BOLLARDS
D.45	REMOVE (E) WOOD FENCE
D.46	REMOVE (E) RETAINING WALL
E.01	EXISTING CONCRETE/ASPHALT SIDEWALK TO REMAIN, PROTECT IN PLACE
E.14	(E) WOOD FENCE TO REMAIN

DEMOLITION NOTES

1. DEMOLITION PLANS INDICATE SOME OF THE SCOPE-OF-WORK INVOLVED FOR THE DEMOLITION PHASE OF THIS PROJECT. CONTRACTOR SHALL REVIEW ALL SHEETS FOR ADDITIONAL DEMOLITION SCOPE.
2. CONTRACTOR SHALL VERIFY EXISTING SITE AND BUILDING CONDITIONS AND DIMENSIONS IN THE FIELD PRIOR TO DEMOLITION ACTIVITIES AND WORK.
3. CONTRACTOR SHALL NOTIFY ARCHITECT OF ANY DISCREPANCIES IN WRITING.
4. CONTRACTOR SHALL NOTIFY ARCHITECT AND OWNER OF ANY POSSIBLE ASBESTOS CONTAINING MATERIALS DISCOVERED BEFORE PROCEEDING WITH WORK, PROTECT INTERIOR CONSTRUCTION TO REMAIN DURING DEMOLITION AND CONSTRUCTION.
5. CONTRACTOR SHALL OBTAIN ALL NECESSARY PERMITS BEFORE COMMENCING WORK.
6. AFTER AWARD OF THE CONTRACT, CHANGE ORDER REQUESTS FOR ADDITIONAL MONEY WILL NOT BE APPROVED IF THE WORK COULD HAVE BEEN ANTICIPATED DURING A SITE VISIT BY THE CONTRACTOR.
7. CONTRACTOR SHALL NOT SCALE DRAWINGS.
8. CONTRACTOR SHALL PROVIDE ALL NECESSARY TEMPORARY SHORING, TEMPORARY BRACING, AND OR TEMPORARY SUPPORTS AS REQUIRED TO MAINTAIN STRUCTURAL INTEGRITY OF EXISTING STRUCTURE TO REMAIN AND OR EXISTING BUILDING ELEMENTS TO REMAIN.
9. CONTRACTOR IS TO VERIFY THE EXACT LOCATION OF ALL EXISTING UTILITIES PRIOR TO DEMOLITION ACTIVITIES AND WORK.
10. CONTRACTOR SHALL REMOVE TRASH AND DEBRIS REGULARLY AS NECESSARY TO ELIMINATED INTERFERENCE WITH ROADS, STREET, WALKS, AND ALL OTHER ADJACENT FACILITIES.
11. CONTRACTOR SHALL REMOVE TRASH AND DEBRIS FROM THE SITE ON A DAILY BASIS.
12. CONTRACTOR IS RESPONSIBLE FOR CONSTRUCTION OF TEMPORARY DUST AND OR SOUND PARTITION BETWEEN CONSTRUCTION AREA AND AREAS NOT IN SCOPE AS NECESSARY. DEMOLITION ACTIVITIES SHALL BE PERFORMED SO AS TO PRODUCE MINIMAL DISTURBANCE TO EXISTING FACILITY AND OCCUPANTS (I.E. MINIMIZE EXCESSIVE AND PROLONGED NOISE LEVELS AND DUST).
13. CONTRACTOR SHALL REPAIR, REPLACE, OR PATCH EXISTING BUILDINGS, DRIVEWAYS, SIDEWALKS, CANOPIES, AND OR PARKING AREAS DAMAGED, MODIFIED, AND OR DISTURBED BY DEMOLITION WORK AT NO COST TO THE OWNER.
14. ALL EXISTING EQUIPMENT THAT REMAINS SHALL BE PROTECTED DURING DEMOLITION AND OR CONSTRUCITON TO PREVENT DAMAGE. ANY DAMAGE TO REMAINING EXISTING EQUIPMENT SUSTAINED DURING DEMOLITION AND OR CONSTRUCITON SHALL BE EQUIVALENTLY REPLACED OR EQUIVALENTLY REPAIRED AT NO COST TO THE OWNER.
15. CONTRACTOR SHALL PROVIDE TRAFFIC HANDLING MEASURES TO PROTECT THE GENERAL PUBLIC AT ALL TIMES, AS NECESSARY AND AS REQURED BY AUTHORITIES HAVING JURISDICTION.
16. DO NOT INTERRUPT EXISTING UTILITIES, EXCEPT WHEN AUTHORIZED IN WRITING BY AUTHORITIES HAVING JURISDICTION. PROVIDE TEMPORARY SERVICES DURING INTERRUPTIONS TO EXISTING UTILITIES, AS ACCEPTABLE TO AUTHORITIES HAVING JURISDICTION.
17. WHEN UTILITY SERVICES ARE REQUIRED TO BE REMOVED, RELOCATED, OR ABANDONED, PROVIDE BYPASS CONNECTIONS TO MAINTAIN CONTINUITY OF SERVICE BEFORE PROCEEDING WITH DEMOLITION.
18. CONTRACTOR SHALL CONTACT ALL UTILITY COMPANIES INCLUDING BUT NOT LIMITED TO THE FOLLOWING: ELECTRIC, GAS, WATER, TELEPHONE, STORM SEWER, AND SANITARY SEWER FOR FIELD LOCATION OF ALL UNDERGROUND AND OVERHEAD UTILITY LINES. PRIOR TO COMMENCEMENT OF ANY DEMOLITION WORK, CONTRACTOR SHALL IDENTIFY ALL ELECTRICAL CIRCUITS SERVICING THE AREA INVOLVED WITH THIS DEMOLITION. THOSE CIRCUITS SHALL THEN BE LOCKED OUT AND TAGGED OUT IF THEY DO NOT SERVICE ANY OF THE REMAINING BUILDING. THOSE CIRCUITS WHICH ARE IDENTIFIED TO SERVICE BOTH THE AREA TO BE DEMOLISHED AND THE REMAINING BUILDING SHALL BE SPLIT SO AS TO KILL ALL ELECTRICAL POWER TO THE AREA TO BE DEMOLISHED WHILE MAINTAINING POWER TO THE REMAINDER OF THE BUILDING.
19. CONTRACTOR SHALL RELOCATE UTILITIES AND EQUIPMENT AS REQUIRED TO ACCOMMODATE NEW HVAC, ELECTRICAL, PLUMBING, AND TECHNOLOGY REQUIREMENTS FOR NEW WORK.
20. PROTECT EXISTING SITE ELEMENTS AND EXISTING LANDSCAPING TO REMAIN. PROTECTION SHALL INCLUDE BUT NOT BE LIMITED TO EXISTING TREES AND OTHER EXISTING VEGETATION INDICATED TO REMAIN IN PLACE AGAINST UNNECESSARY CUTTING, BREAKING, OR SKINNING OF ROOTS. SKINNING OR BRUISING OF BARK, SMOTHERING OF TREES BY STOCKPILING CONSTRUCTION MATERIAL OR EXCAVATED MATERIAL WITHIN DRIP LINES.
21. CONTRACTOR SHALL REGRADE AND HYDROMULCH AREAS AFFECTED BY DEMOLITION.
22. OWNER HAS RIGHT OF FIRST REFUSAL OF ALL ITEMS REMOVED AS PART OF THE SCOPE OF WORK, WHETHER IDENTIFIED AS SALVAGE OR NOT.
23. NOTIFY THE BUILDING OWNER OF ANY MATERIALS, FIXTURES, ETC. TO BE REMOVED THAT ARE DEEMED SALVAGEABLE. TURN OVER ANY REQUESTED ITEMS TO THE BUILDING OWNER IN GOOD AND CLEAN CONDITION.
24. ALL DASHED LINES ARE DEMOLITION LINES U.N.O.

FUEL TANK NOTES:
1. REMOVE THE TANK AND DISPOSE.

PBK

ARCHITECT PBK Architects, Inc.
PBK.com
SAN LUIS OBISPO
408 Higuera Street, Ste 100
San Luis Obispo, CA 93401
805-329-3076

FIRE STATION #44
COASTSIDE FIRE PROTECTION DISTRICT

501 STETSON STREET
MOSS BEACH, CA 94038
PLAN CHECK 02 RESPONSE

PLAN CHECK 02 RESPONSE

KEY PLAN

PLAN NORTH TRUE NORTH

CLIENT
COASTSIDE FIRE PROTECTION DISTRICT
PROJECT NUMBER
230137
DATE 03/13/2026
DRAWN BY: KF/OS CHKED BY: AD
REVISIONS

#	DESCRIPTION	DATE

DEMOLITION SITE PLAN

This document is for plan review only

D1.1

5/29/2026 4:36:11 PM

A1.1.0 - PROPOSED SITE PLAN

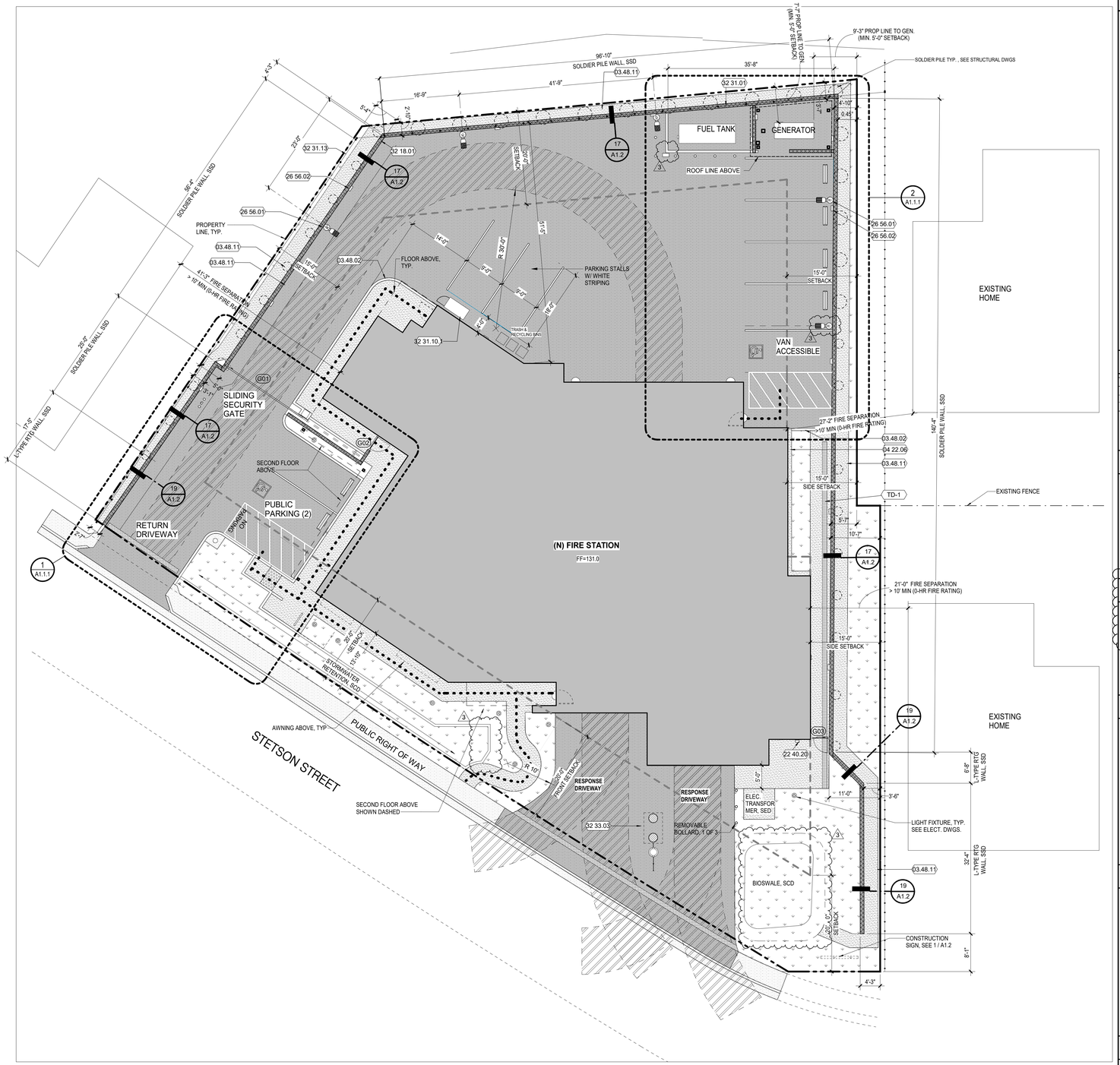

1 PROPOSED SITE PLAN
SCALE: 1" = 10'-0"

KEYNOTES

03.48.02	6" CONCRETE CURB, SEE CIVIL DRAWINGS
03.48.11	CONCRETE V-SWALE, SEE CIVIL DRAWINGS
04 22.06	MOW STRIP, SEE DETAIL 1/A1.3
22 40.20	GAS METER, SEE PLUMBING DWGS.
26 56.01	EXTERIOR POLE MOUNT LIGHT FIXTURE FOR EMERGENCY OPERATIONS ONLY, ON +3'-6" HT. CONC. BASE, KEY SWITCH OPERATED, DIMMABLE W/ SHUTOFF TIMER, SED
26 56.02	EXTERIOR WALL MOUNT LIGHT FIXTURE FOR NORMAL NON-EMERGENCY OPERATIONS, WARM LIGHT, KEY SWITCH OPERATED & DIMMABLE, SED
32 18.01	RETAINING WALL VARIES IN HEIGHT, SEE CIVIL & 'SS' STRUCTURAL DRAWINGS
32 31.01	(N) WOOD FENCING, SEE DETAIL 9 / A1.3
32 31.10.1	LOCKEABLE BIKE LOCKER, SEE SPECS
32 31.13	CONSTRUCTION SIGN, SEE DETAIL
32 33.03	SAND AND OIL INTERCEPTOR, SEE PLUMBING DRAWINGS
TD-1	TRENCH DRAIN, SEE PLUMBING DWGS.

GATE SCHEDULE

MARK	TYPE	DIMENSIONS	DETAIL REFERENCE
G01	SWING SECURITY GATE	17' W x 10' H	13/A1.3
G02	SWING GATE	3' W x 6' H	10/A1.3
G03	SWING GATE	3' W x 6' H	10/A1.3

SITE INFORMATION

1. SITE AREA	21,236 SF (0.487 ACRES)
2. BUILDING AREA: A. FIRST FLOOR- B. SECOND FLOOR-	7,025 SF (33.08% COVERAGE) 3,375 SF
3. PAVED AREAS:	11,581 SF (54.53% COVERAGE)

LIGHTING NOTE

A ALL EXTERIOR NORMAL NON-EMERGENCY LIGHTS TO BE DOWNWARD DIRECTED, KELVIN RATING NOT TO EXCEED 3000K , TO BE CHECKED AT FINAL OCCUPANCY INSPECTION.

SITE PARKING ANALYSIS

PARKING CALCULATIONS (BASED ON 2022 CBC & CALGREEN)

VISITOR PARKING
2 TOTAL PARKING SPACES
1 STANDARD SPACE
1 VAN ACCESSIBILE SPACE
(1 REQ'D PER CBC TABLE 11B-207.2 & SECT 11B-208.2.4)

PER TABLE 5.106.5.3.1:
0 NUMBER OF REQUIRED EV CAPABLE SPACES

STAFF PARKING
7 TOTAL PARKING SPACES

PER TABLE 5.106.5.3.1:
0 NUMBER OF REQUIRED EV CAPABLE SPACES

SITE PLAN NOTES

1. REFER TO CIVIL DOCUMENTS FOR GRADING & UTILITY INFORMATION, SEE SHEET C4 & C5
2. COORD. ALL SPOT ELEVATIONS AND DIMENSIONS WITH CIVIL, LANDSCAPE, AND OR STRUCTURAL DOCUMENTS
3. PROVIDE AND INSTALL POSITIVE DRAINAGE AWAY FROM ALL BUILDINGS OF 1 % MINIMUM, 2 % MAXIMUM AT ALL EXTERIOR PAVED PEDESTRIAN AREAS, INCLUDING BUT NOT LIMITED TO, SIDEWALKS, PATIOS, STAIRS, PAVING, U.N.O.
4. PROVIDE AND INSTALL POSITIVE DRAINAGE AWAY FROM ALL BUILDINGS OF 5 % FOR A HORIZ. DISTANCE OF 10 FEET AT ALL EXTERIOR NON-PAVED AREAS U.N.O
5. REFER TO CIVIL DOCUMENTS FOR CONCRETE SIDEWALK EXPANSION JOINTS AND CONCRETE SIDEWALK CONTROL JOINTS
6. VERIFY AND CONFIRM ALL JOINT LAYOUTS AT ALL CONCRETE SIDEWALKS WITH ARCH. PRIOR TO POURING OF CONCRETE
7. PROVIDE AND INSTALL CONCRETE SIDEWALK EXPANSION JOINTS AT AREAS NOT SPECIFICALLY INDICATED AT 50 FEET ON-CENTER MAX. U.N.O.
8. PROVIDE AND INSTALL CONCRETE SIDEWALK CONTROL JOINTS AT AREAS NOT SPECIFICALLY INDICATED AT DISTANCES EQUIVALENT TO SIDEWALK WIDTH, BUT NOT TO EXCEED 10 FEET ON-CENTER MAX.
9. VERIFY ALL SITE SIGNAGE LOCATIONS WITH ARCH. PRIOR TO INSTALLATION OF SITE SIGNAGE

SITE PLAN LEGEND

- CONCRETE (SIDEWALK) - 4" P.C.C. OVER 4" AB - #3 REBAR, 18" O.C. EA. WAY, PER SEC. 6.8.4 OF GEOTECH REPORT
- HEAVY TRAFFIC CONCRETE - 8" P.C.C. OVER 12" A.B. - #3 REBAR, 18" O.C. EA. WAY, PER SEC. 6.10.3 & 6.10.5 OF GEOTECH REPORT
- LANDSCAPED AREA, SEE LANDSCAPE DWGS.
- FIRE HYDRANT, SEE CIVIL DWGS
- BUILDING FOOTPRINT
- FIRE DEPARTMENT CONNECTION
- FIRE ACCESS LANE
- BUILDING ID SIGN
- CONC. RETAINING WALL, SEE 19 / A1.2 & RETAINING WALL DWGS
- 8" CMU WALL, SEE DETAIL 11 / A1.3
- PROPERTY LINE
- PROPOSED (N) WOOD FENCING SEE 7 / A1.3, 9 / A1.3 & 19 / A1.2 — POST LOCATIONS
- ACCESSIBLE PATH OF TRAVEL TO BE MIN. 4' WIDE WITH MAX X-SLOPE OF 1.98% & RUNNING SLOPE OF MAX 5%
- LIGHT FIXTURES, SEE ELECTRICAL DRAWINGS
- (E) WOOD FENCE, VARIES IN HEIGHT

PBK

ARCHITECT PBK Architects, Inc.
PBK.com
SAN LUIS OBISPO
408 Higuera Street, Ste 100
San Luis Obispo, CA 93401
805-329-3076

FIRE STATION #44
COASTSIDE FIRE PROTECTION DISTRICT

501 STETSON STREET
MOSS BEACH, CA 94038
PLAN CHECK 02 RESPONSE

BID SET

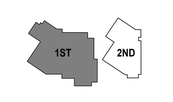

KEY PLAN

CLIENT
COASTSIDE FIRE PROTECTION DISTRICT
PROJECT NUMBER
230137
DATE 03/13/2026
DRAWN BY: KF/OS CHKED BY: AD

REVISIONS

#	DESCRIPTION	DATE

This document is for plan review only

PROPOSED SITE PLAN

A1.1.0

8/25/2026 5:05:40 PM

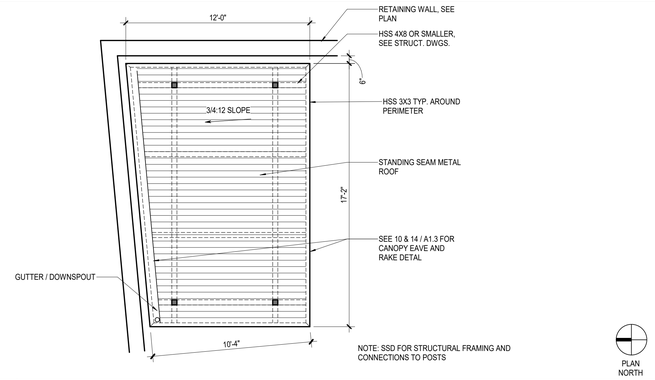

3 GENERATOR ENCLOSURE ROOF PLAN

SCALE: 1/4" = 1'-0"

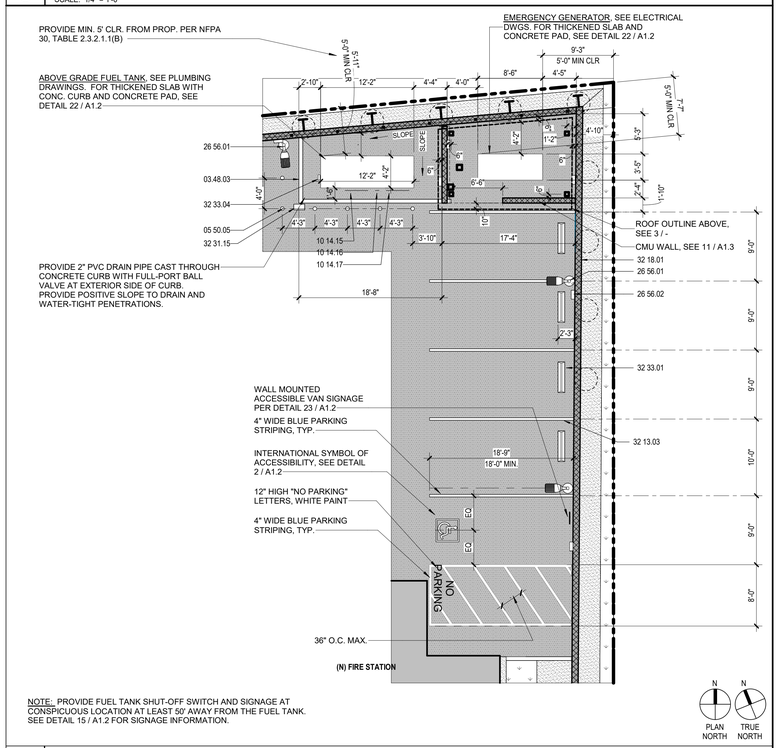

NOTE: PROVIDE FUEL TANK SHUT-OFF SWITCH AND SIGNAGE AT CONSPICUOUS LOCATION AT LEAST 50' AWAY FROM THE FUEL TANK. SEE DETAIL 15 / A1.2 FOR SIGNAGE INFORMATION.

2 ENLARGED SITE PLAN AT GEN / FUEL TANK & ACCESSIBLE PARKING

SCALE: 1/8" = 1'-0"

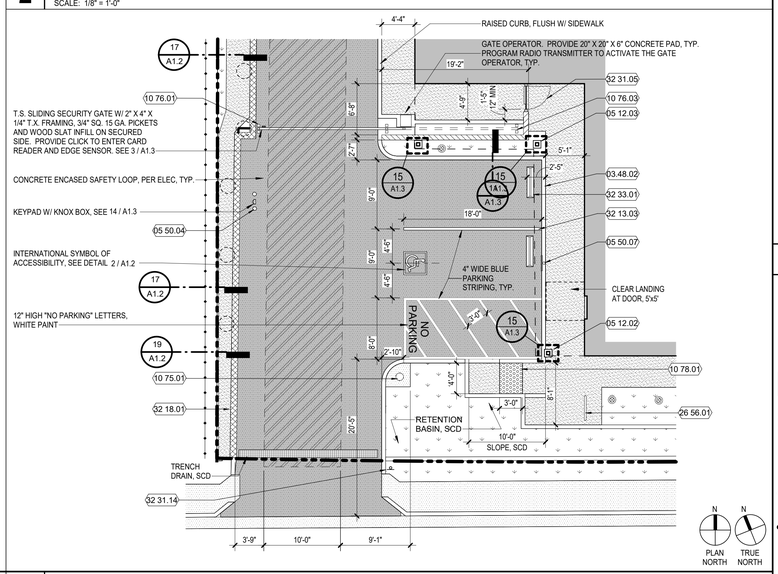

1 ENLARGED SITE PLAN AT ENTRY

SCALE: 1/8" = 1'-0"

KEYNOTES

03.48.02	6" CONCRETE CURB, SEE CIVIL DRAWINGS
03.48.03	RAISED CONCRETE CURB, TYP.
05 12.02	STEEL COLUMN, SEE 15/A1.3 & STRUCT. DWGS
05 12.03	EXTERIOR BUILDING COLUMN, SEE DETAIL 15/A1.3
05 50.04	PIPE BOLLARD, FIXED
05 50.05	PIPE BOLLARD, REMOVABLE, SEE DETAIL 2/A1.3
05 50.07	PARKING SIGN POST, SEE DETAIL 23/A1.2
10 14.15	FUEL TANK WARNING SIGN, SEE DETAIL 3/A1.2, ADHERE TO FUEL TANK
10 14.16	NO SMOKING SIGN, SEE DETAIL 12/A1.2, ADHERE TO FUEL TANK
10 14.17	COMBUSTIBLE LIQUID SIGN, SEE DETAIL 7/A1.2, ADHERE TO FUEL TANK
10 75.01	FLAGPOLE, SEE DETAIL 11/A1.2
10 76.01	GATE STOP, SEE DETAIL 5/A1.3
10 76.03	'ROLLING GATE TRACK WITH STOP GATE RECEIVER AT END OF TRACK SEE 4/A1.3
10 78.01	WET SET TRUNCATED DOMES, SEE DETAIL 4/A1.2
26 56.01	EXTERIOR POLE MOUNT LIGHT FIXTURE FOR EMERGENCY OPERATIONS ONLY, ON +3'-6" HT. CONC. BASE, KEY SWITCH OPERATED, DIMMABLE W/ SHUTOFF TIMER, SED
26 56.02	EXTERIOR WALL MOUNT LIGHT FIXTURE FOR NORMAL NON-EMERGENCY OPERATIONS, WARM LIGHT, KEY SWITCH OPERATED & DIMMABLE, SED
32 13.03	PAVEMENT STRIPING PER SPECS
32 18.01	RETAINING WALL VARIES IN HEIGHT, SEE CIVIL & 'SS' STRUCTURAL DRAWINGS
32 31.05	METAL FENCE GATE, SEE DETAILS 9, 10
32 31.14	PARKING ENTRANCE SIGN, SEE DETAIL 13 / A1.2
32 31.15	GATE PEDESTAL / FUEL KEY READER, SEE PLUMBING DWGS
32 33.01	CONCRETE WHEEL STOP, SEE DETAIL 9/A1.2
32 33.04	FUEL HOSE HANGER

SITE PLAN LEGEND

- CONCRETE (SIDEWALK) - 4" P.C.C. OVER 4" AB - #3 REBAR, 18" O.C. EA. WAY, PER SEC. 6.8.4 OF GEOTECH REPORT
- HEAVY TRAFFIC CONCRETE - 8" P.C.C. OVER 12" A.B. - #3 REBAR, 18" O.C. EA. WAY, PER SEC. 6.10.3 & 6.10.5 OF GEOTECH REPORT
- LANDSCAPED AREA, SEE LANDSCAPE DWGS.
- FIRE HYDRANT, SEE CIVIL DWGS
- BUILDING FOOTPRINT
- FIRE DEPARTMENT CONNECTION
- FIRE ACCESS LANE
- BUILDING ID SIGN
- CONC. RETAINING WALL, SEE 19 / A1.2 & RETAINING WALL DWGS
- 8" CMU WALL, SEE DETAIL 11 / A1.3
- PROPERTY LINE
- PROPOSED (N) WOOD FENCING SEE 7 / A1.3, 9 / A1.3 & 19 / A1.2
- POST LOCATIONS
- ACCESSIBLE PATH OF TRAVEL TO BE MIN. 4' WIDE WITH MAX X-SLOPE OF 1.98% & RUNNING SLOPE OF MAX 5%
- LIGHT FIXTURES, SEE ELECTRICAL DRAWINGS
- (E) WOOD FENCE, VARIES IN HEIGHT

PBK

ARCHITECT PBK Architects, Inc.
PBK.com
SAN LUIS OBISPO
408 Higuera Street, Ste 100
San Luis Obispo, CA 93401
805-329-3076

FIRE STATION #44
COASTSIDE FIRE PROTECTION DISTRICT

501 STETSON STREET
MOSS BEACH, CA 94038
PLAN CHECK 02 RESPONSE

BID SET

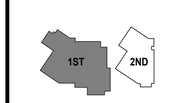

KEY PLAN

CLIENT
COASTSIDE FIRE PROTECTION DISTRICT
PROJECT NUMBER
230137
DATE 03/13/2026
DRAWN BY: KF/OS CHKED BY: AD
REVISIONS

#	DESCRIPTION	DATE

This document is for plan review only

SITE - ENLARGED PLANS

A1.1.1

5/29/2026 4:36:18 PM

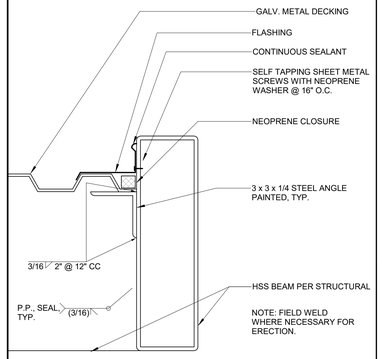

21 GENERATOR ENCLOSURE CANOPY RAKE
SCALE: 3" = 1'-0"

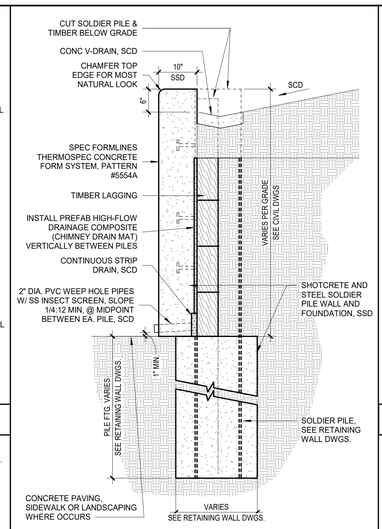

17 SOLDIER PILE RETAINING WALL
SCALE: 3/4" = 1'-0"

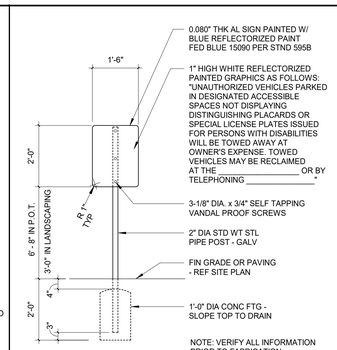

13 PARKING SIGN
SCALE: 1/2" = 1'-0"

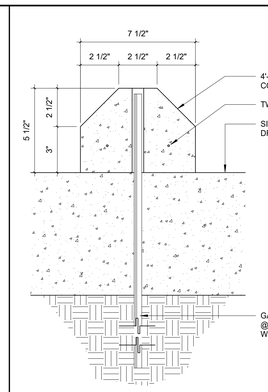

9 CONC WHEEL STOP
SCALE: 3" = 1'-0"

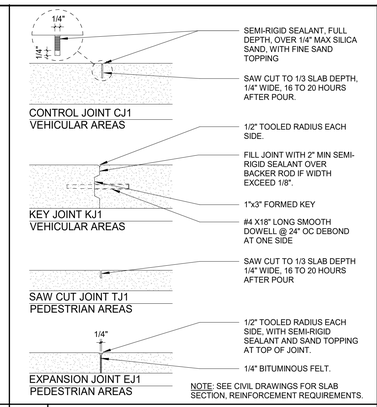

5 CONCRETE JOINTS
SCALE: 1" = 1'-0"

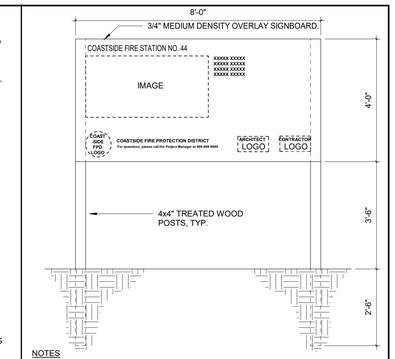

NOTES
1. MDO BACKGROUND AND POSTS TO BE PAINTED WHITE
2. ALL LETTERS AND TO BE BLACK (OPTIMA TYPEFACE) AND GRAPHICS TO BE COLORED
3. MAINTAIN PROPORTIONS AS SHOWN
4. ALL SIGNAGE INFO WILL BE PROVIDED BY THE OWNER

1 CONSTRUCTION SIGN
SCALE: 1/2" = 1'-0"

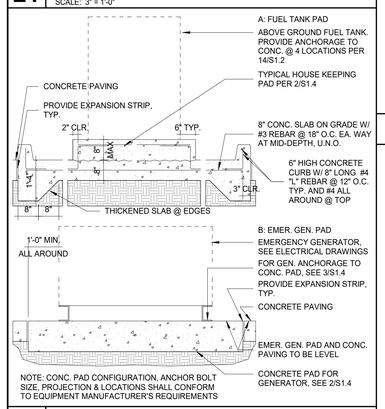

22 FUEL TANK + GENERATOR PAD
SCALE: 1/2" = 1'-0"

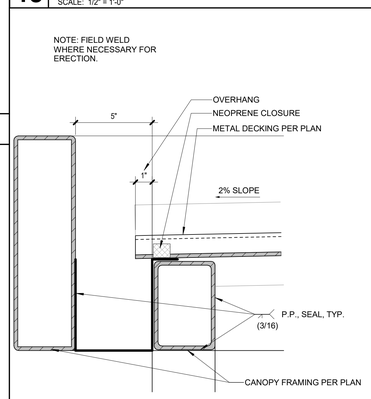

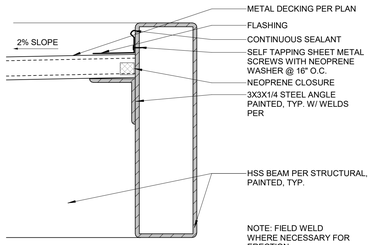

10 GENERATOR ENCLOSURE CANOPY EAVE
SCALE: 3" = 1'-0"

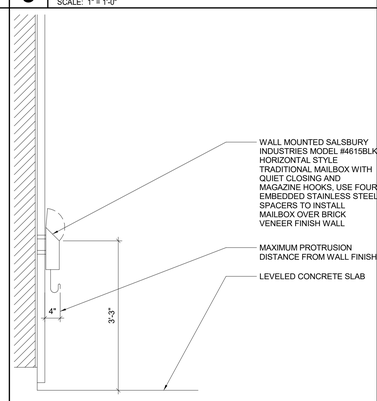

6 MAIL BOX
SCALE: 3/4" = 1'-0"

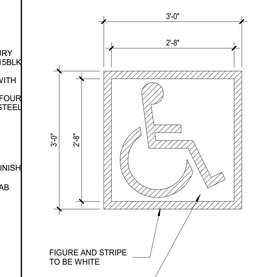

NOTES:
1) ALL STROKES TO BE 2" WIDE W/ WHITE PAINT
2) PROVIDE 2 (TWO) COATS OF PAINT
3) BACKGROUND COLOR TO BE FEDERAL BLUE NO. 15090
4) LOCATE SYMBOL AT CENTER OF STALL WHERE SHOWN ON THE SITE PLAN
5) INTERNATIONAL SYMBOL OF ACCESSIBILITY - REF TO CBC SEC 11B-703.7.2.1

2 ACCESS SYMBOL
SCALE: 3/4" = 1'-0"

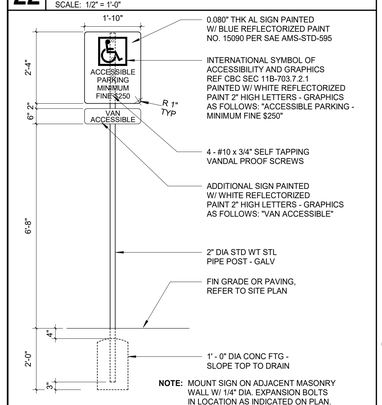

23 ACCESSIBLE PARKING SIGN
SCALE: 1/2" = 1'-0"

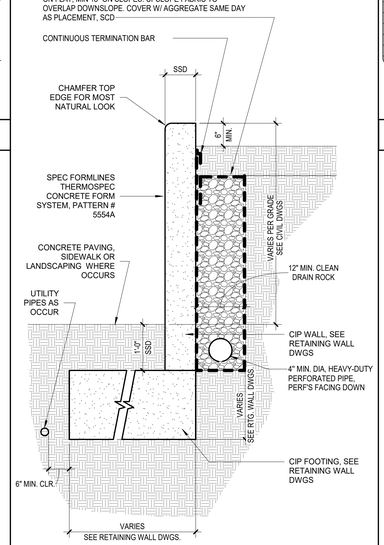

19 L-TYPE RETAINING WALL
SCALE: 3/4" = 1'-0"

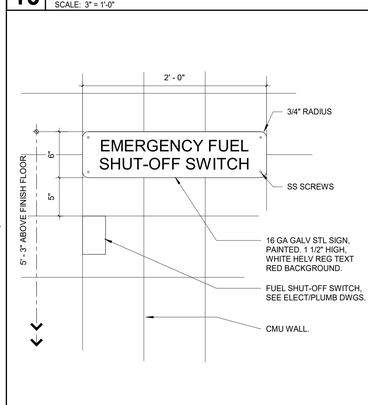

15 EMERGENCY SHUTOFF SIGN
SCALE: 1 1/2" = 1'-0"

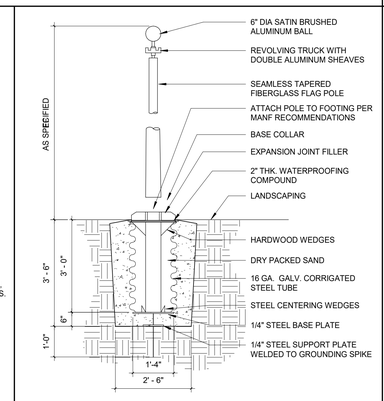

11 FLAGPOLE
SCALE: 1/2" = 1'-0"

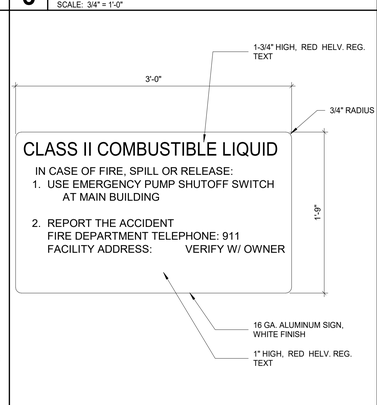

7 COMBUSTIBLE LIQUID SIGN
SCALE: 1 1/2" = 1'-0"

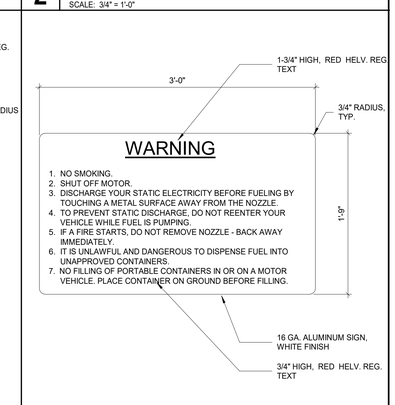

3 FUEL TANK WARNING SIGN
SCALE: 1 1/2" = 1'-0"

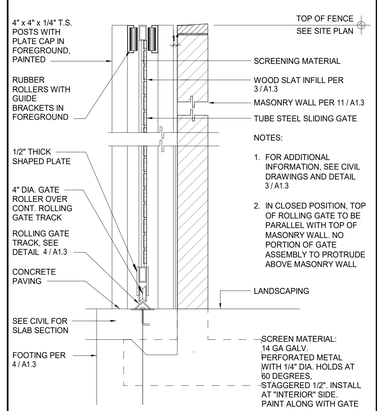

24 WALL AT GATE
SCALE: 3/4" = 1'-0"

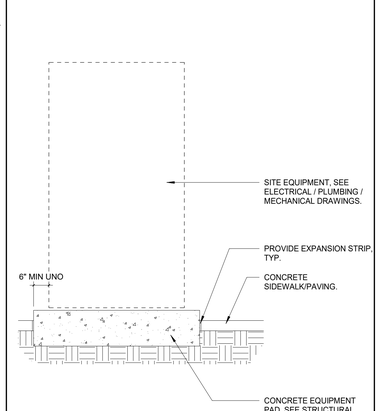

20 TYP. EQUIPMENT PAD
SCALE: 1/2" = 1'-0"

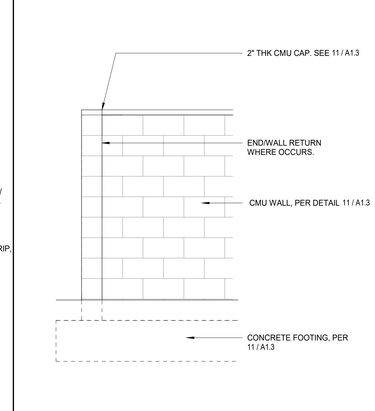

16 TYP SITEWALL ELEV
SCALE: 1/2" = 1'-0"

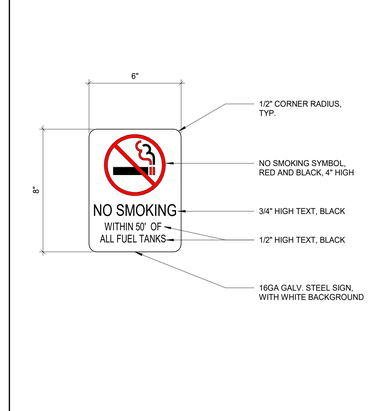

12 NO SMOKING SIGNAGE
SCALE: 3" = 1'-0"

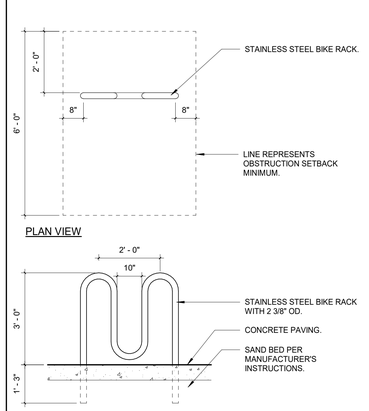

8 BIKE RACK
SCALE: 1/2" = 1'-0"

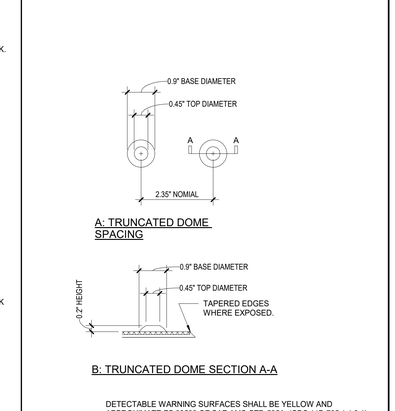

4 2.1/4 TRUNC. DOME SPACING
SCALE: 6" = 1'-0"

PBK

ARCHITECT PBK Architects, Inc.
PBK.com
SAN LUIS OBISPO
408 Higuera Street, Ste 100
San Luis Obispo, CA 93401
805-329-3076

FIRE STATION #44
COASTSIDE FIRE PROTECTION DISTRICT

501 STETSON STREET
MOSS BEACH, CA 94038
PLAN CHECK 02 RESPONSE

BID SET

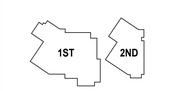

KEY PLAN
PLAN NORTH
TRUE NORTH

This document is for plan review only

CLIENT
COASTSIDE FIRE PROTECTION DISTRICT
PROJECT NUMBER
230137
DATE 03/13/2026
DRAWN BY: KF/OS CHKED BY: AD
REVISIONS

#	DESCRIPTION	DATE

SITE DETAILS

A1.2

5/29/2026 4:36:20 PM

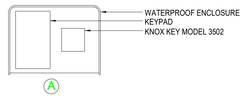

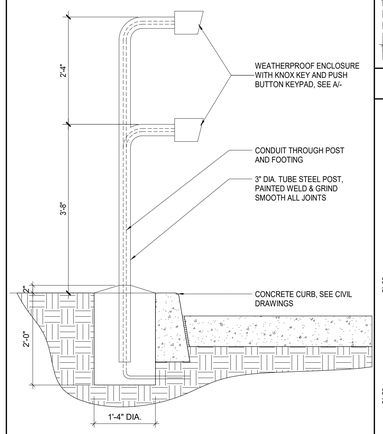

14 KEYPAD
SCALE: 3/4" = 1'-0"

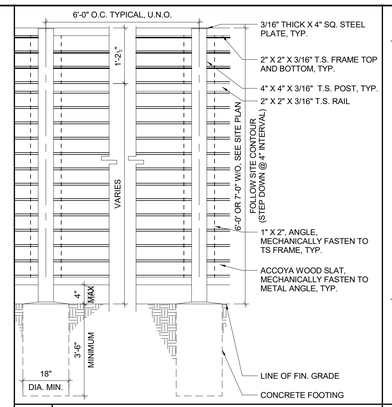

9 T.S. FENCING W/ WOOD SLAT INFILL
SCALE: 3/4" = 1'-0"

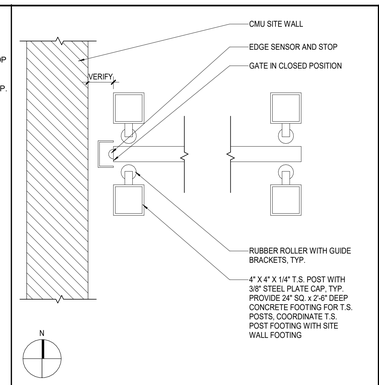

5 SLIDING SECURITY GATE STOP
SCALE: 1 1/2" = 1'-0"

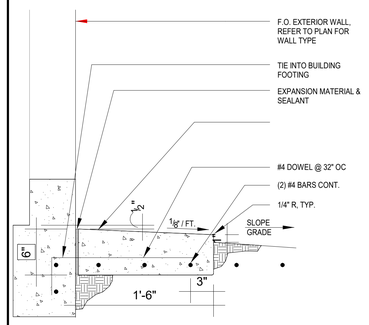

1 MOW STRIP
SCALE: 1 1/2" = 1'-0"

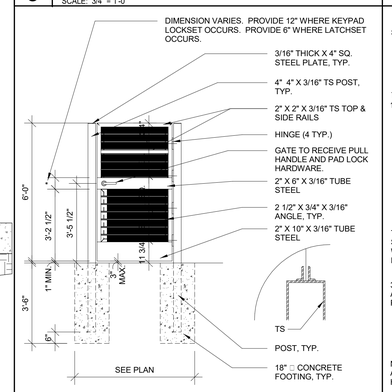

10 T.S. GATE
SCALE: 3/8" = 1'-0"

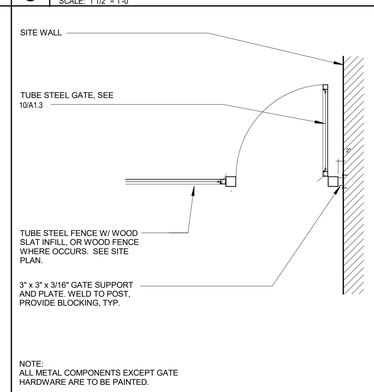

6 GATE @ BLDG
SCALE: 1/2" = 1'-0"

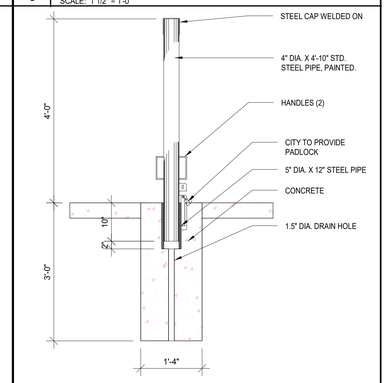

2 REMOVEABLE BOLLARD
SCALE: 3/4" = 1'-0"

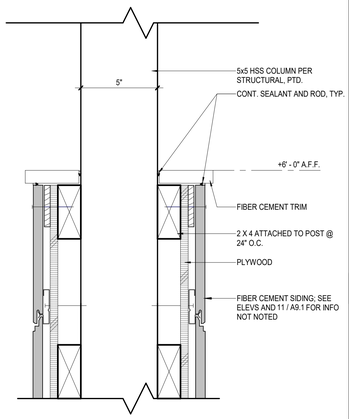

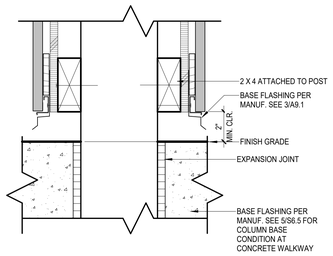

15 EXTERIOR COLUMN DETAIL
SCALE: 3" = 1'-0"

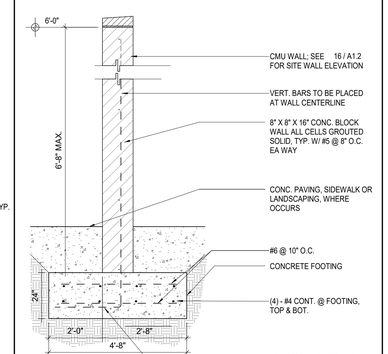

11 SITE CMU WALL
SCALE: 3/4" = 1'-0"

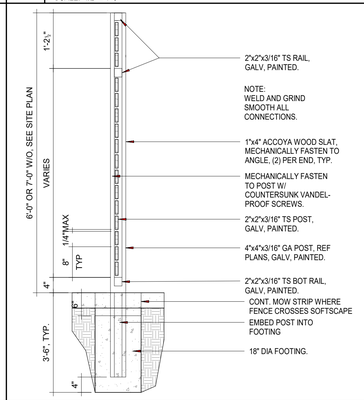

7 WOOD SLAT FENCE SECTION
SCALE: 3/4" = 1'-0"

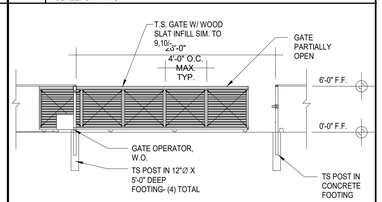

ROLLING GATES ELEVATION (VIEW FROM SECURED AREA))

NOTES:

1. THE BOTTOM TRACK SHALL BE CONSTRUCTED THAT THE DOOR CANNOT BE LIFTED FROM THE TRACK WHEN THE DOOR IS IN A LOCKED POSITION.

2. GATE IN OPENED POSITION SHOULD BE AT LEAST 5' AWAY FROM THE CLOSEST BUILDING WALL/WAINSCOT FACE OR AS RECOMMENDED BY GATE MANUFACTURER. ALSO SEE SHEET A1.1 FOR REFERENCE.

3. IN CLOSED POSITION, TOP OF GATE TO BE PARALLEL WITH TOP OF SITE WALL.

4. ROLLBACK SPACE FOR GATE IN OPENED POSITION IS 16'-0" OR AS RECOMMENDED BY GATE MANUFACTURER. ALSO SEE SHEET A1.1 FOR REFERENCE.

3 SLIDING SECURITY GATE ELEVATION
SCALE: 1/8" = 1'-0"

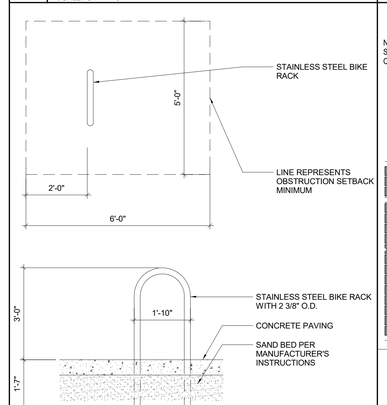

12 STAINLESS STEEL BICYCLE RACK
SCALE: 1/2" = 1'-0"

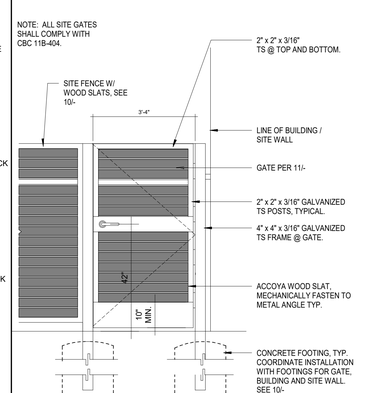

8 SITE GATE ELEVATION
SCALE: 1/2" = 1'-0"

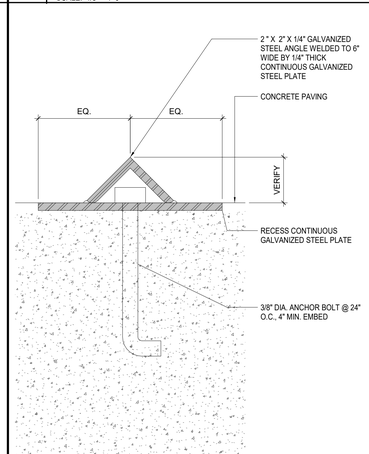

4 ROLLING GATE TRACK
SCALE: 6" = 1'-0"

PBK

ARCHITECT PBK Architects, Inc.
PBK.com
SAN LUIS OBISPO
408 Higuera Street, Ste 100
San Luis Obispo, CA 93401
805-329-3076

FIRE STATION #44
COASTSIDE FIRE PROTECTION DISTRICT

501 STETSON STREET
MOSS BEACH, CA 94038
PLAN CHECK 02 RESPONSE

BID SET

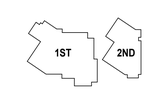

KEY PLAN

PLAN NORTH TRUE NORTH

CLIENT
COASTSIDE FIRE PROTECTION DISTRICT
PROJECT NUMBER
230137
DATE 03/13/2026
DRAWN BY: KF/OS CHKED BY: AD
REVISIONS

#	DESCRIPTION	DATE

This document is for plan review only

SITE DETAILS

A1.3

5/29/2026 4:36:22 PM

A1.4 - EXPANSION AND CONTROL JOINT PLAN

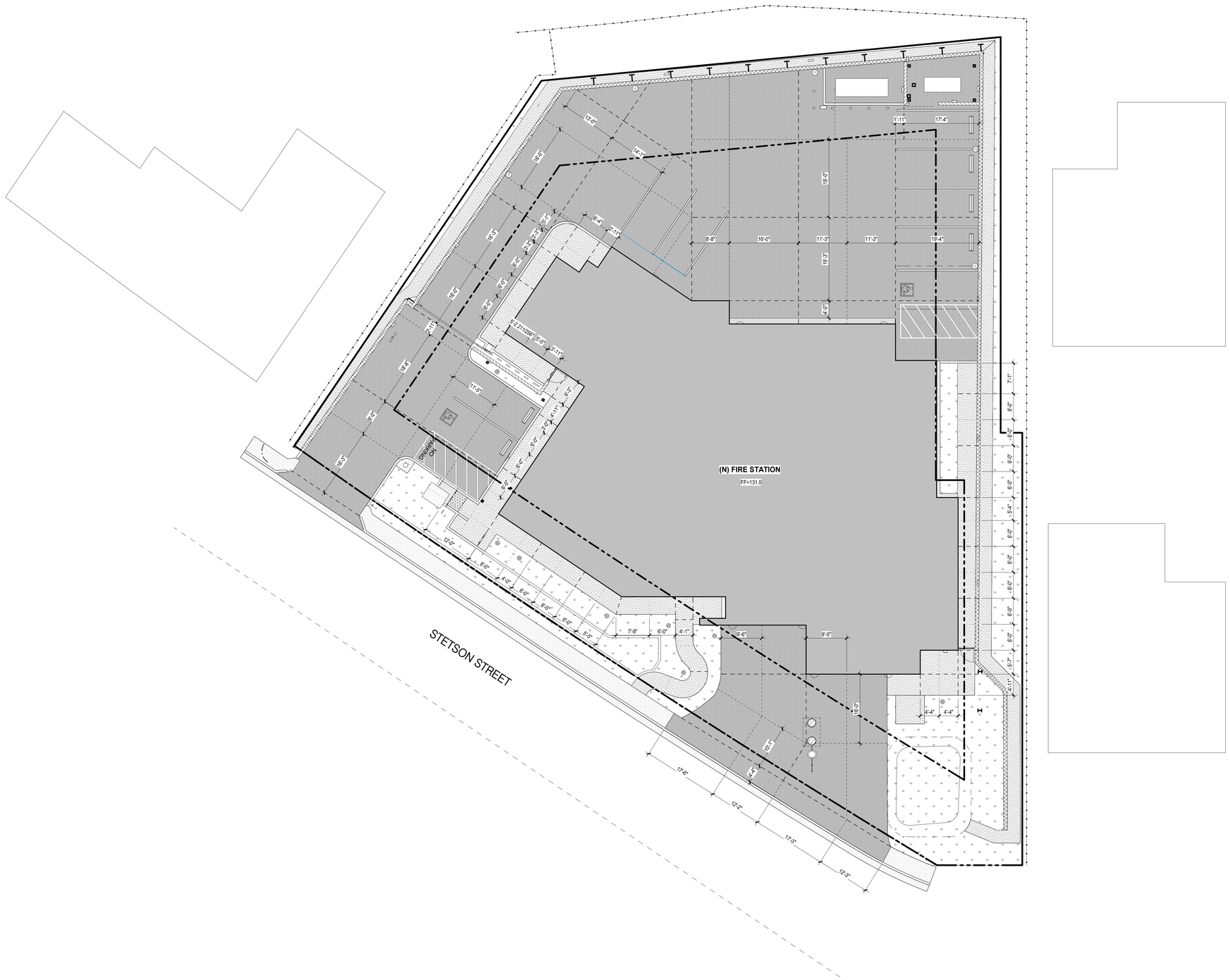

SITE PLAN LEGEND

CONCRETE (SIDEWALK)
- 4" P.C.C. OVER " AB
- 6X6X10 GA W.W.M. REINFORCEMENT INSTALLED AT HALF DEPTH

CONTROL JOINT

EXPANSION JOINT

HEAVY TRAFFIC CONCRETE
- 6" P.C.C. OVER 4" A.B.
- 6X6X10GA W.W.M. REINFORCEMENT INSTALLED AT HALF-DEPTH

CONTROL JOINT

EXPANSION JOINT

NOTE: SEE 5/A1.2 FOR CONTROL / EXPANSION JOINT DETAILS.

1 EXPANSION AND JOINT PLAN
SCALE: 1" = 10'-0"

5/29/2026 4:36:25 PM

PBK

ARCHITECT PBK Architects, Inc.
PBK.com
SAN LUIS OBISPO
408 Higuera Street, Ste 100
San Luis Obispo, CA 93401
805-329-3076

FIRE STATION #44
COASTSIDE FIRE PROTECTION DISTRICT

501 STETSON STREET
MOSS BEACH, CA 94038
PLAN CHECK 02 RESPONSE

BID SET

1ST 2ND

KEY PLAN

PLAN NORTH TRUE NORTH

CLIENT
COASTSIDE FIRE PROTECTION DISTRICT

PROJECT NUMBER
230137

DATE 03/13/2026

DRAWN BY: KF/OS CHKED BY: AD

REVISIONS

#	DESCRIPTION	DATE

This document is for plan review only

EXPANSION AND CONTROL JOINT PLAN

A1.4

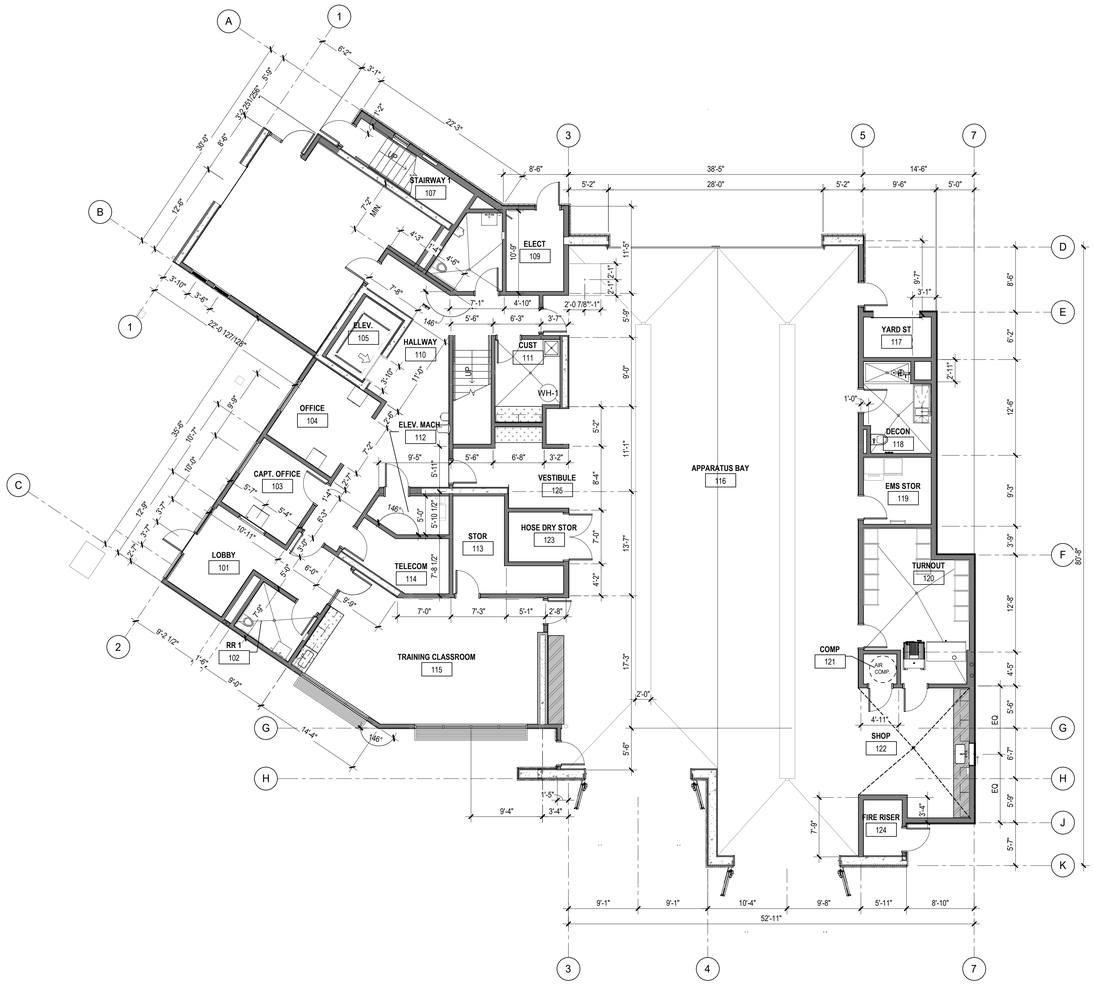

FIRST FLOOR GROSS AREA = 6,612 SF

N PLAN NORTH
N TRUE NORTH

1 FIRST FLOOR DIMENSION PLAN

SCALE: 1/8" = 1'-0"

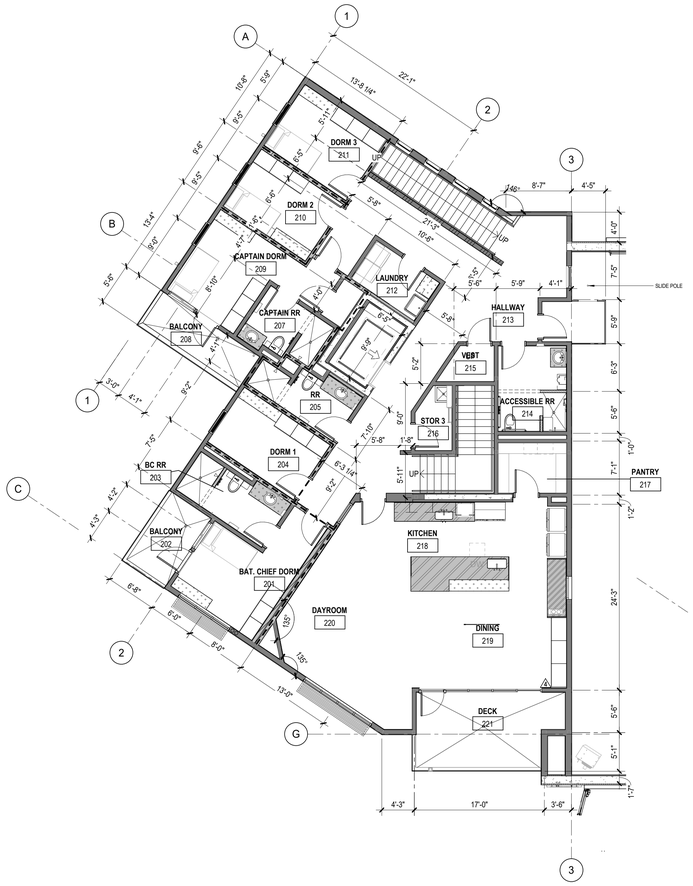

SECOND FLOOR GROSS AREA = 3,566 SF

N PLAN NORTH
N TRUE NORTH

2 SECOND FLOOR DIMENSION PLAN

SCALE: 1/8" = 1'-0"

ROOM SCHEDULE FIRST FLOOR

Name	Number	Area
LOBBY	101	172 SF
RR 1	102	58 SF
CAPT. OFFICE	103	101 SF
OFFICE	104	122 SF
ELEV.	105	55 SF
FITNESS	106	488 SF
STAIRWAY 1	107	84 SF
RR 2	108	74 SF
ELECT	109	79 SF
HALLWAY	110	377 SF
CUST	111	86 SF
ELEV. MACH.	112	47 SF
STOR	113	113 SF

ROOM SCHEDULE FIRST FLOOR

Name	Number	Area
TELECOM	114	84 SF
TRAINING CLASSROOM	115	476 SF
APPARATUS BAY	116	2,863 SF
YARD ST	117	46 SF
DECON	118	94 SF
EMS STOR	119	76 SF
TURNOUT	120	235 SF
COMP	121	17 SF
SHOP	122	225 SF
HOSE DRY STOR	123	46 SF
FIRE RISER	124	36 SF
VESTIBULE	125	115 SF
STAIRWAY 2	126	129 SF

ROOM SCHEDULE SECOND FLOOR

Name	Number	Area
BAT. CHIEF DORM	201	168 SF
BALCONY	202	65 SF
BC RR	203	83 SF
DORM 1	204	115 SF
RR	205	73 SF
ELEV	206	55 SF
CAPTAIN RR	207	66 SF
BALCONY	208	73 SF
CAPTAIN DORM	209	167 SF
DORM 2	210	114 SF
DORM 3	211	123 SF
LAUNDRY	212	59 SF
HALLWAY	213	592 SF
ACCESSIBLE RR	214	95 SF
VEST	215	28 SF
STOR 3	216	36 SF
PANTRY	217	59 SF
KITCHEN	218	281 SF
DINING	219	159 SF
DAYROOM	220	342 SF
DECK	221	159 SF
SLIDE POLE DECK	222	69 SF

KEYNOTES

FLOOR PLAN LEGEND

- 123 — ROOM NUMBER
- CASEWORK; AS PER SCHEDULE AND DETAILS ON SHEET A10.4 AND A10.5
- 42" HIGH WALL
- 106B — DOOR DESIGNATION
- A — WINDOW DESIGNATION
- 1-HR RATED WALL, (MIN. 50 STC AT DORM ROOMS); 6" WOOD STUDS @ 16" O.C., WITH ONE LAYER OF 5/8" TYPE X GYPSUM BOARD EACH SIDE, FROM TOP OF FOUNDATION/ TOP OF SLAB TO UNDERSIDE OF ROOF DECK. REF. UL 309, U341 . SEE 10 / A9.3 FOR WALL PENETRATION DETAILS.
- 68" — PARTITION TYPE *REFER TO SHEET* **A9.3** *FOR DEFINITION* — PROVIDE IDENTIFICATION MARK IN 3" HIGH TEXT TO READ "FIRE BARRIER/ FIRE PARTITION - PROTECT ALL OPENINGS" IN ATTIC SPACE AT INTERVAL NOT EXCEEDING 30 FEET AND WITHIN 15 FEET OF THE END OF EACH WALL ALONG BOTH SIDES OF THE WALL. PAINTED RED. 2022 CBC, SECTION 703.3., SEE SIGNAGE SCHED. ON 8 / A9.7
- CONCRETE SHEAR WALL. SEE STRUCT. DWGS FOR WALL THICKNESS & EXTENT. PROVIDE FURRING STRIPS WITH ONE LAYER OF 5/8" GYPSUM BOARD EACH SIDE, PAINTED. SEE STRUCTURAL DWGS.
- 2x FLAT FURRING STRIPS WITH ONE LAYER OF 5/8" GYPSUM BOARD, PAINTED. SEE A9.3
- 2x4 FURRING WITH ONE LAYER OF 5/8" GYPSUM BOARD, PAINTED.
- 6" WOOD STUDS @ 16" O.C.; AT INTERIOR LOCATIONS PROVIDE ONE LAYER OF 5/8" GYPSUM BOARD EACH SIDE, PAINTED. AT EXTERIOR LOCATIONS PROVIDE ONE LAYER OF 5/8" GYPSUM BOARD AT INTERIOR SIDE, PAINTED, AND ON EXTERIOR SIDE, U.N.O.
- STONE VENEER WAINSCOT FINISH OVER BROWNCOAT, SEE DETAIL 15 / A9.1
- FIRE EXTINGUISHER CABINET, SEE DETAIL 13 / A10.2

GENERAL FLOOR PLAN NOTES

1. DO NOT SCALE DRAWINGS, WRITTEN DIMENSIONS TAKE PRECEDENCE, CONTACT ARCH IF CLARIFICATION IS NECESSARY IN ORDER TO DETERMINE THE INTENT OF THE CONTRACT DOCUMENTS
2. DRAWINGS NOTED AS "N.T.S" OR "NTS" ARE NOT TO SCALE
3. ALL DIMENSIONS ARE TO STRUCTURAL COLUMN LINES OR THE SURFACE OF PARTITION ASSEMBLY U.N.O.
4. FIELD VERIFY ALL DIMENSIONS AND EXISTING CONDITION BEFORE COMMENCING WORK. NOTIFY ARCH. OF ANY DISCREPANCIES PRIOR TO PROCEEDIN WITH AFFECTED WORK
5. NOTES OR DIMENSIONS NOTED AS "TYPICAL" OR "TYP." OR "TYP" SHALL APPLY TO CONDITIONS THAT ARE THE SAME OR SIMILAR
6. DIMENSIONS NOTED AS "FIELD VERIFY" OR "V.I.F." OR "VIF" SHALL BE MEASURED AND CONFIRMED AT THE PROJECT SITE BY THE CONTRACTOR AND REVIEWED WITH THE ARCH. BEFORE INCORPORATING INTO THE WORK
7. DIMENSIONS NOTED AS "CLEAR" OR "CLEAR INSIDE" REQUIRE SPECIFIC COORDINATION AMONG DISCIPLINES AND OR MANUFACTURERS
8. REFER TO PARTITION TYPES ON A9.3
9. ALL INTERIOR PARTITIONS THIS SHEET, EXCEPT FOR FURR-OUT PARTITIONS, SHALL BE WALL TYPE A U.N.O.
10. ALL INTERIOR FURR-OUT PARTITIONS THIS SHEET SHALL BE PARTITION TYPE B U.N.O.
11. ALIGN FINISHED FACE OF WALLS WHERE WALL PARTITIONS OF DIFFERING THICKNESS ABUT AND OR ADJOIN IN THE SAME PLANE
12. ALL DOORS SHALL BE SET 6 INCHES OFF THE ADJACENT PERPENDICULAR WALL ON THE HINGE SIDE OF THE DOOR U.N.O., NOTIFY ARCH. OF ANY DOOR-RELATED CONFLICTS, INCLUDING BUT NOT LIMITED TO CONFLICTS CONCERNING ACCESSIBILITY STANDARDS
13. ALL DOOR THRESHOLDS AT ALL EXTERIOR DOORS SHALL BE SET IN FULL BED OF SEALANT
14. COORD. ALL ROOF DRAIN LEADER LOCATIONS WITH FLOOR PLAN PRIOR TO FLOOR SLAB CONSTRUCTION
15. ALL FLOOR SLOPES TO FLOOR DRAINS SHALL NOT EXCEED 1:48
16. PROVIDE AND INSTALL SELF-LEVELING UNDERLAYMENT WHERE UNEVEN FLOOR SLAB EXISTS PRIOR TO INSTALLATION OF FLOOR FINISHES
17. COORD. HOUSEKEEPING PAD LOCATIONS AND DIMENSIONS WITH EQUIPMENT TO BE INSTALLED
18. ALL FLOOR FINISH CHANGES SHALL OCCUR AT THE CENTERLINE OF DOORS U.N.O.
19. ALL FLOOR FINISH MATERIAL CHANGES SHALL HAVE REDUCER STRIPS
20. ALL REQUIRED ACCESSIBLE CLEARANCES FOR ALL ITEMS, INCLUDING BUT NOT LIMITED TO ALL COUNTER TOPS, ALL PLUMBING FIXTURES, ALL DRINKING FOUNTAINS, ALL ELECTRIC WATER COOLERS, ALL LAVATORIES, ALL URINALS, ALL TOILETS SHALL BE STRICTLY ENFORCED
21. REFER TO OTHER DISCIPLINE DOCUMENTS FOR ADDITIONAL SCOPE OF WORK

PBK

ARCHITECT PBK Architects, Inc.
PBK.com
SAN LUIS OBISPO
408 Higuera Street, Ste 100
San Luis Obispo, CA 93401
805-329-3076

FIRE STATION #44
COASTSIDE FIRE PROTECTION DISTRICT

501 STETSON STREET
MOSS BEACH, CA 94038
PLAN CHECK 02 RESPONSE

BID SET

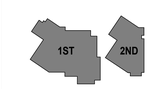

KEY PLAN

PLAN NORTH
TRUE NORTH

CLIENT
COASTSIDE FIRE PROTECTION DISTRICT
PROJECT NUMBER
230137
DATE 03/13/2026
DRAWN BY: KF/OS CHKED BY: AD
REVISIONS

#	DESCRIPTION	DATE

This document is for plan review only

DIMENSION FLOOR PLANS

A2.1

8/25/2026 5:05:46 PM

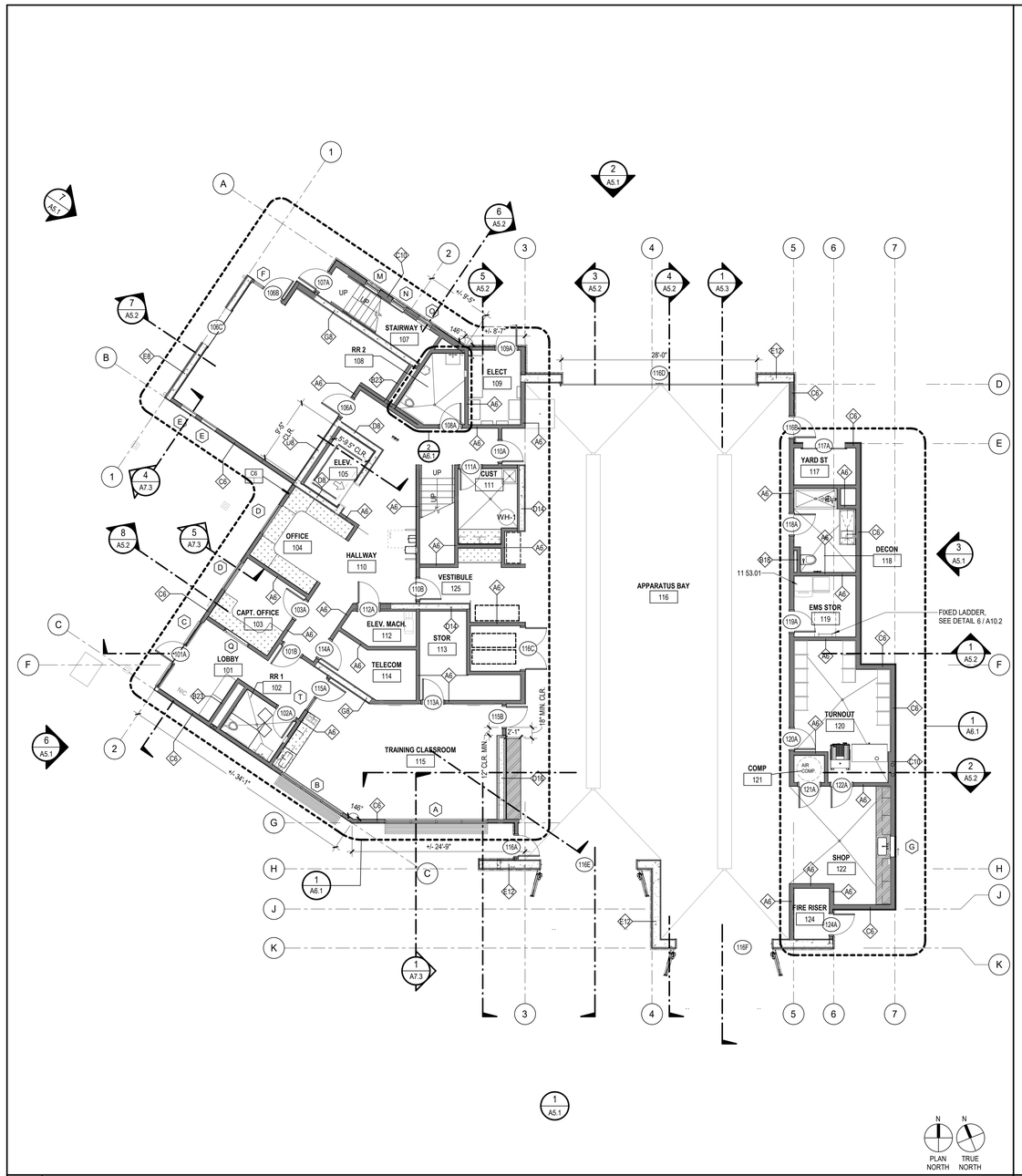

1 FP01 - FIRST FLOOR PLAN

SCALE: 1/8" = 1'-0"

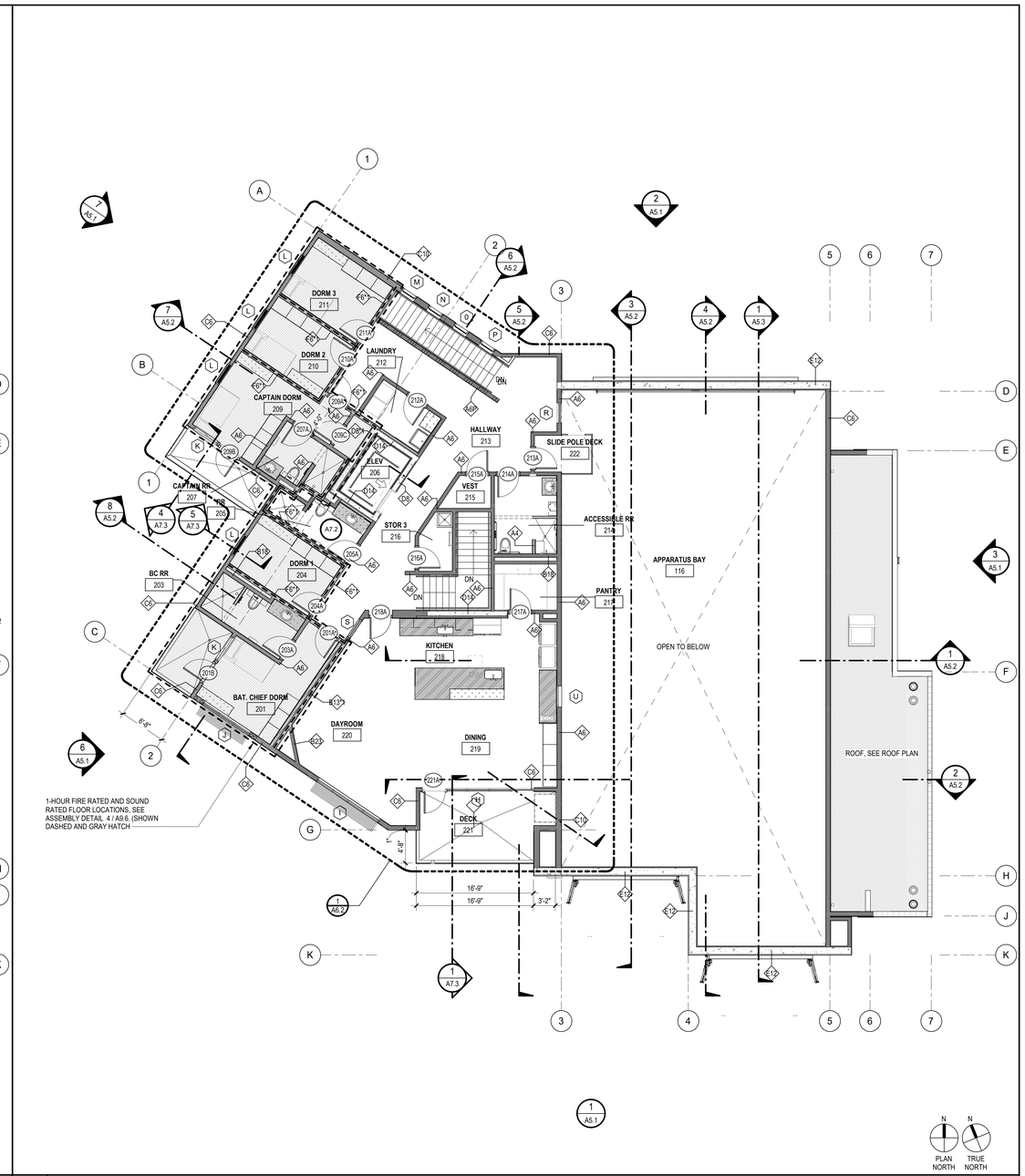

2 FP02 - SECOND FLOOR PLAN

SCALE: 1/8" = 1'-0"

ROOM SCHEDULE FIRST FLOOR

Name	Number	Area
LOBBY	101	172 SF
RR 1	102	58 SF
CAPT. OFFICE	103	101 SF
OFFICE	104	122 SF
ELEV.	105	55 SF
FITNESS	106	488 SF
STAIRWAY 1	107	84 SF
RR 2	108	74 SF
ELECT	109	79 SF
HALLWAY	110	377 SF
CUST	111	86 SF
ELEV. MACH.	112	47 SF
STOR	113	113 SF

ROOM SCHEDULE FIRST FLOOR

Name	Number	Area
TELECOM	114	84 SF
TRAINING CLASSROOM	115	476 SF
APPARATUS BAY	116	2,863 SF
YARD ST	117	46 SF
DECON	118	94 SF
EMS STOR	119	76 SF
TURNOUT	120	235 SF
COMP	121	17 SF
SHOP	122	225 SF
HOSE DRY STOR	123	46 SF
FIRE RISER	124	36 SF
VESTIBULE	125	115 SF
STAIRWAY 2	126	129 SF

ROOM SCHEDULE SECOND FLOOR

Name	Number	Area
BAT. CHIEF DORM	201	168 SF
BALCONY	202	65 SF
BC RR	203	83 SF
DORM 1	204	115 SF
RR	205	73 SF
ELEV	206	55 SF
CAPTAIN RR	207	66 SF
BALCONY	208	73 SF
CAPTAIN DORM	209	167 SF
DORM 2	210	114 SF
DORM 3	211	123 SF
LAUNDRY	212	59 SF
HALLWAY	213	592 SF
ACCESSIBLE RR	214	95 SF
VEST	215	28 SF
STOR 3	216	36 SF
PANTRY	217	59 SF
KITCHEN	218	281 SF
DINING	219	159 SF
DAYROOM	220	342 SF
DECK	221	159 SF
SLIDE POLE DECK	222	69 SF

FLOOR PLAN LEGEND

- 123 — ROOM NUMBER
- CASEWORK; AS PER SCHEDULE AND DETAILS ON SHEET A10.4 AND A10.5
- 42" HIGH WALL
- 100B — DOOR DESIGNATION
- A — WINDOW DESIGNATION
- 1-HR RATED WALL, (MIN. 50 STC AT DORM ROOMS): 6" WOOD STUDS @ 16" O.C., WITH ONE LAYER OF 5/8" TYPE X GYPSUM BOARD EACH SIDE, FROM TOP OF FOUNDATION/ TOP OF SLAB TO UNDERSIDE OF ROOF DECK. REF. UL 309, U341 . SEE 10 / A9.3 FOR WALL PENETRATION DETAILS.
- 6-8" — PARTITION TYPE *REFER TO SHEET* **A9.3** *FOR DEFINITION*
- PROVIDE IDENTIFICATION MARK IN 3" HIGH TEXT TO READ "FIRE BARRIER/ FIRE PARTITION - PROTECT ALL OPENINGS" IN ATTIC SPACE AT INTERVAL NOT EXCEEDING 30 FEET AND WITHIN 15 FEET OF THE END OF EACH WALL ALONG BOTH SIDES OF THE WALL. PAINTED RED. 2022 CBC, SECTION 703.3., SEE SIGNAGE SCHED. ON SHEET A9.7
- CONCRETE SHEAR WALL. SEE STRUCT. DWGS FOR WALL THICKNESS & EXTENT. PROVIDE FURRING STRIPS WITH ONE LAYER OF 5/8" GYPSUM BOARD EACH SIDE, PAINTED. SEE STRUCTURAL DWGS.
- 2x FLAT FURRING STRIPS WITH ONE LAYER OF 5/8" GYPSUM BOARD, PAINTED. SEE A9.3
- 2x4 FURRING WITH ONE LAYER OF 5/8" GYPSUM BOARD, PAINTED.
- 6" WOOD STUDS @ 16" O.C.; AT INTERIOR LOCATIONS PROVIDE ONE LAYER OF 5/8" GYPSUM BOARD EACH SIDE, PAINTED. AT EXTERIOR LOCATIONS PROVIDE ONE LAYER OF 5/8" GYPSUM BOARD AT INTERIOR SIDE, PAINTED, AND ON EXTERIOR SIDE, U.N.O.
- STONE VENEER WAINSCOT FINISH OVER BROWNCOAT, SEE DETAIL 15 / A9.1
- FIRE EXTINGUISHER CABINET, SEE DETAIL 13 / A10.2

GENERAL FLOOR PLAN NOTES

1. DO NOT SCALE DRAWINGS, WRITTEN DIMENSIONS TAKE PRECEDENCE, CONTACT ARCH IF CLARIFICATION IS NECESSARY IN ORDER TO DETERMINE THE INTENT OF THE CONTRACT DOCUMENTS
2. DRAWINGS NOTED AS "N.T.S" OR "NTS" ARE NOT TO SCALE
3. ALL DIMENSIONS ARE TO STRUCTURAL COLUMN LINES OR THE SURFACE OF PARTITION ASSEMBLY U.N.O.
4. FIELD VERIFY ALL DIMENSIONS AND EXISTING CONDITION BEFORE COMMENCING WORK. NOTIFY ARCH. OF ANY DISCREPANCIES PRIOR TO PROCEEDIN WITH AFFECTED WORK
5. NOTES OR DIMENSIONS NOTED AS "TYPICAL" OR "TYP." OR "TYP" SHALL APPLY TO CONDITIONS THAT ARE THE SAME OR SIMILAR
6. DIMENSIONS NOTED AS "FIELD VERIFY" OR "V.I.F." OR "V/IF" SHALL BE MEASURED AND CONFIRMED AT THE PROJECT SITE BY THE CONTRACTOR AND REVIEWED WITH THE ARCH. BEFORE INCORPORATING INTO THE WORK
7. DIMENSIONS NOTED AS "CLEAR" OR "CLEAR INSIDE" REQUIRE SPECIFIC COORDINATION AMONG DISCIPLINES AND OR MANUFACTURERS
8. REFER TO PARTITION TYPES ON A9.3
9. ALL INTERIOR PARTITIONS THIS SHEET, EXCEPT FOR FURR-OUT PARTITIONS, SHALL BE WALL TYPE A U.N.O.
10. ALL INTERIOR FURR-OUT PARTITIONS THIS SHEET SHALL BE PARTITION TYPE B U.N.O.
11. ALIGN FINISHED FACE OF WALLS WHERE WALL PARTITIONS OF DIFFERING THICKNESS ABUT AND OR ADJOIN IN THE SAME PLANE
12. ALL DOORS SHALL BE SET 6 INCHES OFF THE ADJACENT PERPENDICULAR WALL ON THE HINGE SIDE OF THE DOOR U.N.O., NOTIFY ARCH. OF ANY DOOR-RELATED CONFLICTS, INCLUDING BUT NOT LIMITED TO CONFLICTS CONCERNING ACCESSIBILITY STANDARDS
13. ALL DOOR THRESHOLDS AT ALL EXTERIOR DOORS SHALL BE SET IN FULL BED OF SEALANT
14. COORD. ALL ROOF DRAIN LEADER LOCATIONS WITH FLOOR PLAN PRIOR TO FLOOR SLAB CONSTRUCTION
15. ALL FLOOR SLOPES TO FLOOR DRAINS SHALL NOT EXCEED 1:48
16. PROVIDE AND INSTALL SELF-LEVELING UNDERLAYMENT WHERE UNEVEN FLOOR SLAB EXISTS PRIOR TO INSTALLATION OF FLOOR FINISHES
17. COORD. HOUSEKEEPING PAD LOCATIONS AND DIMENSIONS WITH EQUIPMENT TO BE INSTALLED
18. ALL FLOOR FINISH CHANGES SHALL OCCUR AT THE CENTERLINE OF DOORS U.N.O.
19. ALL FLOOR FINISH MATERIAL CHANGES SHALL HAVE REDUCER STRIPS
20. ALL REQUIRED ACCESSIBLE CLEARANCES FOR ALL ITEMS, INCLUDING BUT NOT LIMITED TO ALL COUNTER TOPS, ALL PLUMBING FIXTURES, ALL DRINKING FOUNTAINS, ALL ELECTRIC WATER COOLERS, ALL LAVATORIES, ALL URINALS, ALL TOILETS SHALL BE STRICTLY ENFORCED
21. REFER TO OTHER DISCIPLINE DOCUMENTS FOR ADDITIONAL SCOPE OF WORK

PBK

ARCHITECT PBK Architects, Inc.
PBK.com
SAN LUIS OBISPO
408 Higuera Street, Ste 100
San Luis Obispo, CA 93401
805-329-3076

FIRE STATION #44
COASTSIDE FIRE PROTECTION DISTRICT

501 STETSON STREET
MOSS BEACH, CA 94038
PLAN CHECK 02 RESPONSE

BID SET

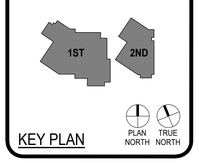

KEY PLAN

CLIENT
COASTSIDE FIRE PROTECTION DISTRICT
PROJECT NUMBER
230137
DATE 03/13/2026
DRAWN BY: KF/OS CHKED BY: AD
REVISIONS

#	DESCRIPTION	DATE

This document is for plan review only

ARCHITECTURAL FLOOR PLANS

A2.2

8/25/2026 5:05:51 PM

A3.1 - REFLECTED CEILING PLAN

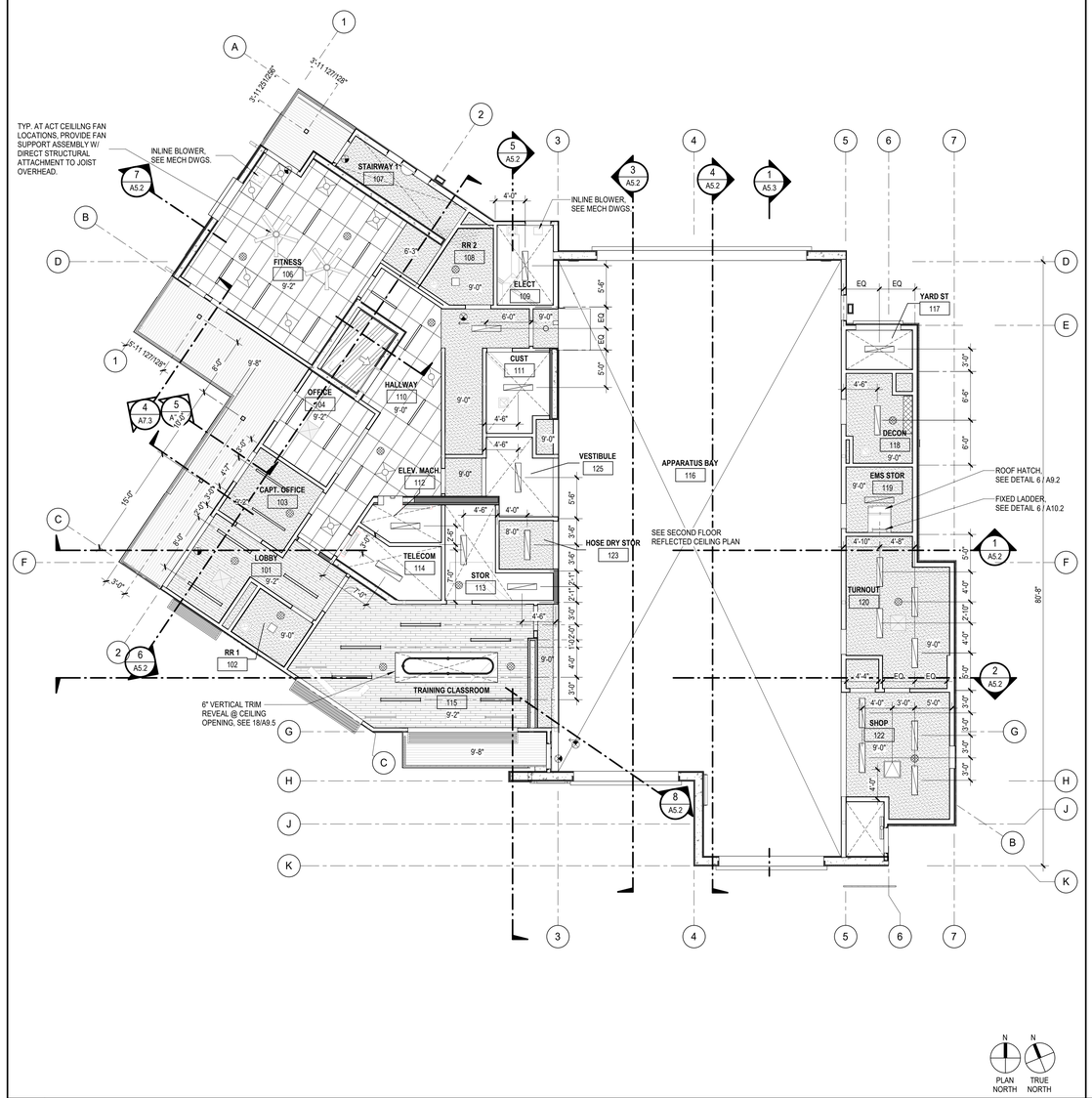

1 FIRST FLOOR REFLECTED CEILING PLAN
SCALE: 1/8" = 1'-0"

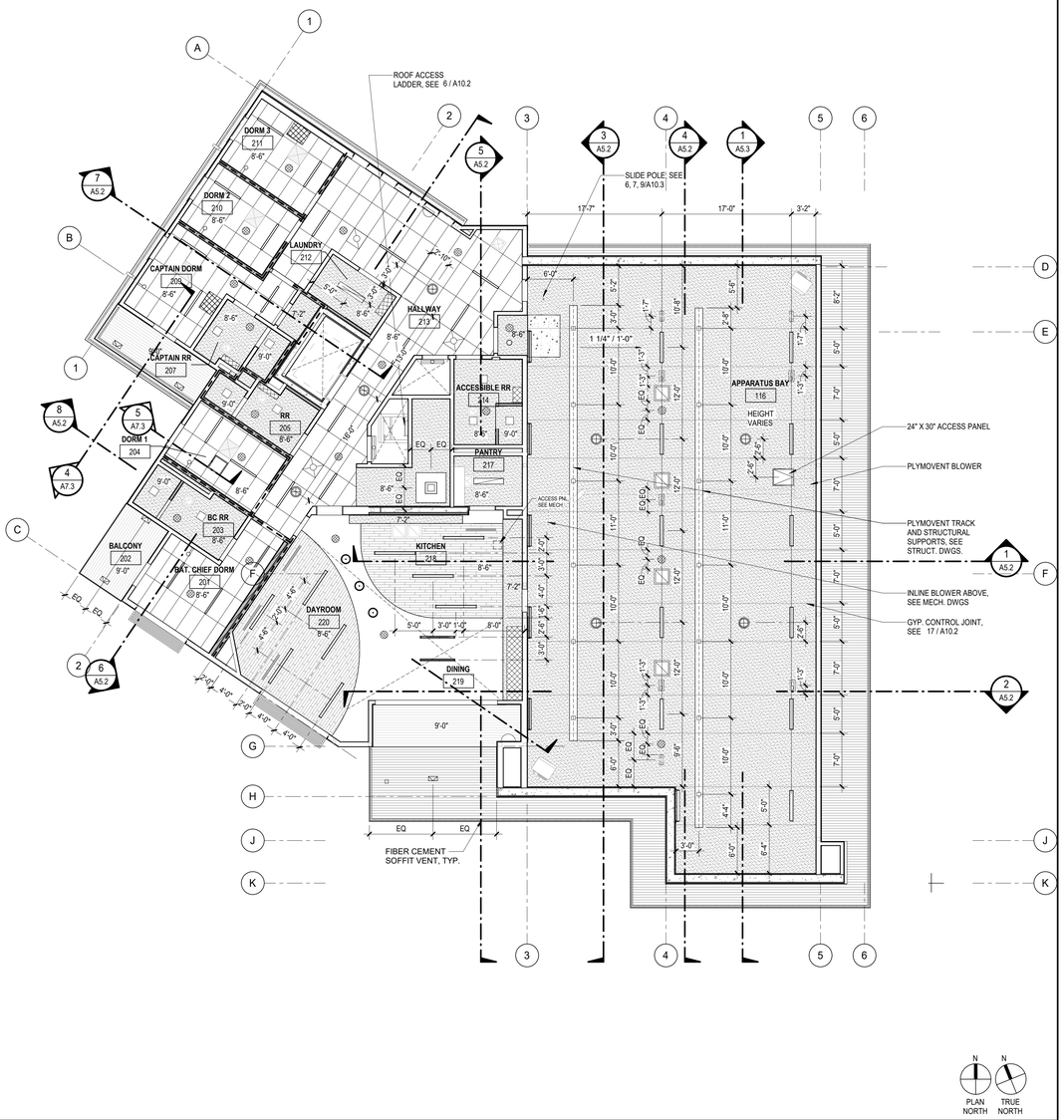

2 SECOND FLOOR REFLECTED CEILING PLAN
SCALE: 1/8" = 1'-0"

CEILING MATERIALS LEGEND

- APC TYPE I - 2' x 4' ACOUSTIC PANEL *RE: FINISH SCHEDULE* SEE A9.4 & A9.5
- GWB - GYPSUM BOARD *RE: FINISH SCHEDULE* SEE 8 / A9.5
- FCS - FIBER CEMENT SOFFIT PANEL SYSTEM *RE: FINISH SCHEDULE*
- FIBER CEMENT SOFFIT VENT, SEE DETAIL 14 / A9.1
- SPW - WOOD CEILING SYSTEM *RE: FINISH SCHEDULE* SEE 14 / A9.5
- OPEN TO STRUCTURE ABOVE
- MECHANICAL EQUIPMENT; SEE MECH DWGS
- FIRE ALARM SPEAKER
- LIGHT FIXTURES, SEE ELEC. DWGS
- CASEWORK UP TO CEILING WHERE OCCURS
- CORD REEL, SEE 1 / A10.2 AND ELECT. DWGS
- HOSE REEL, SEE PLUMBING DWGS
- SKYLIGHTS SEE 11 / A9.2
- CEILING FAN, SEE ELEC.

KEYNOTES

GENERAL CEILING PLAN NOTES

1. REFER TO AND COORD. WITH ROOM FINISH SCHEDULES FOR SPECIFIC CEILING TYPES.
2. ALL SCHEDULED CEILING HEIGHTS ARE FROM THE MAIN FLOOR LEVEL WITHIN THE ROOM AND OR SPACE, AND ARE NOT FROM AN ELEVATED FLOOR LEVEL, AND ARE NOT FROM A RECESSED FLOOR LEVEL.
3. NO FIRE SPRINKLER HEADS ARE SHOWN ON ARCH. CEILING PLANS. ALL SPRINKLER HEADS SHALL BE CENTERED WITHIN CEILING TILES U.N.O.
4. ONLY CEILING MOUNTED FIXTURES AND EQUIP. IS SHOWN ON ARCH. CEILING PLANS. REFER TO INTERIOR ELEVATIONS FOR WALL MOUNTED FIXTURES. REFER TO MEPT DOCUMENTS FOR ADDITIONAL INFORMATION CONCERNING CEILING MOUNTED FIXTURES AND OR WALL MOUNTED FIXTURES.
5. CEILING MOUNTED LIGHT FIXTURES ARE SHOWN FOR LOCATION PURPOSES ONLY. COORD. WITH ELEC. DOCUMENTS FOR LIGHT FIXTURE DESIGNATIONS.
6. CEILING MOUNTED LIGHT FIXTURES WITHIN FIRE RATED CEILING ASSEMBLIES SHALL HAVE LIGHT FIXTURE PROTECTION AND BE TENTED OR OTHERWISE FIRE RATED TO MATCH CEILING ASSEMBLY FIRE RATING.
7. VERIFY LOCATIONS OF ALL CEILING ACCESS PANELS WITH MEPT DOCUMENTS. COORD. LOCATIONS OF CEILING ACCESS PANELS WITH ARCH. PRIOR TO INSTALLATION. CEILING ACCESS PANEL FIRE RATINGS SHALL MATCH CEILING ASSEMBLY FIRE RATINGS.
8. REFER TO WALL SECTIONS FOR WALL-CEILING INTERFACE

PBK
ARCHITECT PBK Architects, Inc.
PBK.com
SAN LUIS OBISPO
408 Higuera Street, Ste 100
San Luis Obispo, CA 93401
805-329-3076

FIRE STATION #44
COASTSIDE FIRE PROTECTION DISTRICT

501 STETSON STREET
MOSS BEACH, CA 94038
PLAN CHECK 02 RESPONSE

BID SET

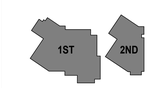

KEY PLAN
PLAN NORTH
TRUE NORTH

This document is for plan review only

CLIENT
COASTSIDE FIRE PROTECTION DISTRICT
PROJECT NUMBER
230137
DATE 03/13/2026
DRAWN BY: KF/OS CHKED BY: AD
REVISIONS

#	DESCRIPTION	DATE

REFLECTED CEILING PLAN

A3.1

5/29/2026 4:36:45 PM

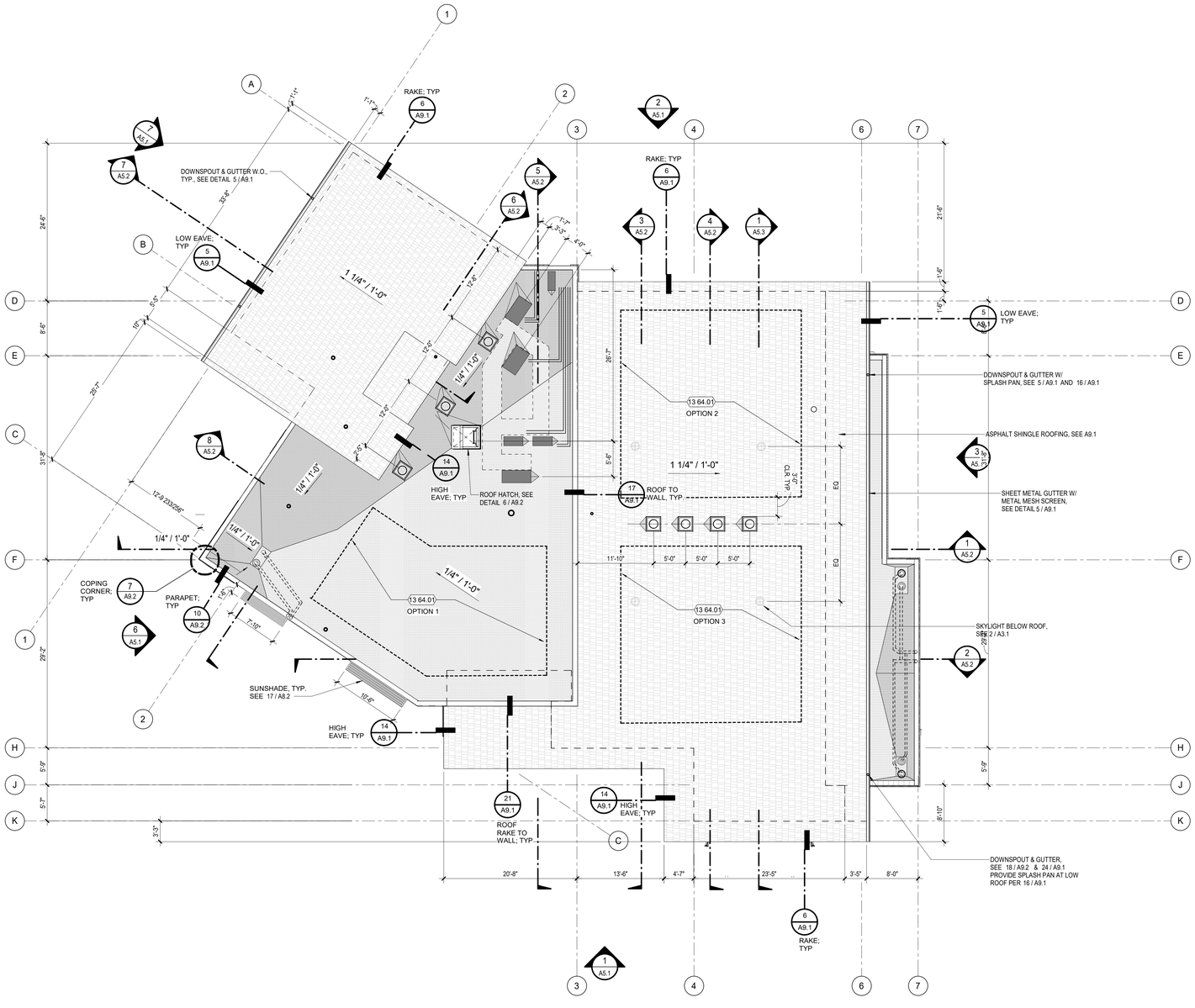

1 OVERALL ROOF PLAN
SCALE: 1/8" = 1'-0"

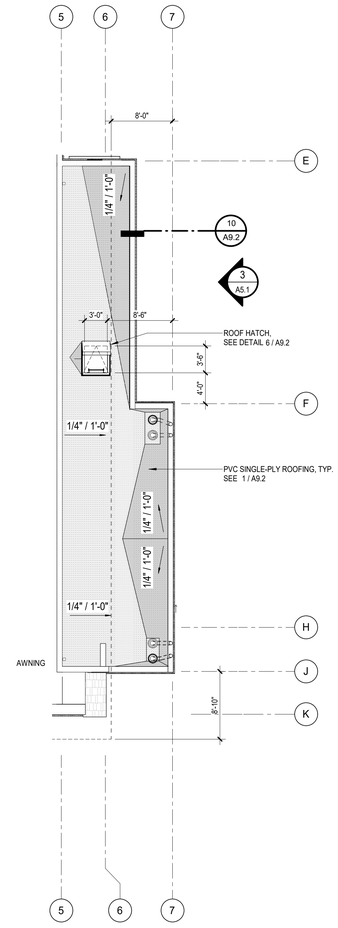

2 LOWER ROOF PLAN
SCALE: 1/8" = 1'-0"

ROOF PLAN LEGEND

- SINGLE PLY ROOFING MEMBRANE, SEE - / ---
  - MEMBRANE MANUFACTURER: SEE SPECS
  - SYSTEM: SEE SPECS
  - FIRE HAZARD CLASSIFICATION: UL CLASS B
- ASPHALT SHINGLE ROOFING, SEE A9.1 AND SPECS.
- ROOF AND OVERFLOW DRAIN, SEE DETAIL 18 / A9.2, 15 / A9.2 AND PLUMBING DRAWINGS
- ROOF ACCESS HATCH, SEE DETAIL 6 / A9.2
- CRICKET, SEE DETAIL 1 / A9.2
- MECHANICAL UNITS, SEE MECHANICAL DRAWINGS. FOR LOUVER AT WALLS SEE MECH. DWGS. & 18 / A9.1
- ROOF GUTTER AND DOWNSPOUT, TYP.
- ROOF WALKWAY MAT, TYP. SEE SPECS AND DETAIL 11 / A9.2
- SKYLIGHT, SOLARTUBE OR EQUAL, SEE SPECS

GENERAL NOTES

ROOF PLAN NOTES:

1. ALL HEIGHTS ARE REFERENCED FROM FINISH FLOOR ELEVATION = 0'-0". REFER TO PLANS AND SECTIONS FOR ADDITIONAL INFORMATION.
2. FOR ADDITIONAL CONDUIT AND PIPING PENETRATIONS AT ROOF AREAS, SEE MECHANICAL, PLUMBING, ELECTRICAL DRAWINGS AND DETAILS 23 / A9.1 AND 22 / A9.1 AND 19 / A9.1.
3. SEE DETAIL 5 / A9.2 FOR ROOF TOP EQUIPMENT CRICKET.
4. SEE DETAIL 16 / A9.2 FOR FLASHING AT INTERSECTING WALLS.
5. PROVIDE MINIMUM 1/2" PER FOOT ROOF SLOPE FOR DRAINAGE AT ALL FLAT ROOF LOCATIONS.
6. PROVIDE SPLASH PAN FOR DOWNSPOUT TERMINATING AT FLAT ROOF. SEE DETAIL 16 / A9.1
7. PROVIDE SPLASH BLOCK FOR DOWNSPOUT TERMINATION AT GRADE, SEE 20 / A9.1
8. SEE MECH. DRAWINGS FOR FLASHING AT HVAC DUCT AND EQUIPMENT CURBS.

KEYNOTES

13 64.01 PROVIDE AND INSTALL PHOTOVOLTAIC SOLAR PANELS. (BASIS OF DESIGN, MFR: REC/GROUP, MODEL: 'REC ALPHA PURE-R') INSTALL PER MFR DETAILS. SEE ELEC DRAWINGS FOR EQUIPMENT AND ADDITIONAL REQUIREMENTS. ALL ATTACHMENT POINTS MUST BE SECURED TO STRUCTURAL ROOF MEMBERS (RAFTERS/TRUSSES) OR APPROVED BLOCKING METHODS, COMPLY WITH DETAILS FOR ROOF PENETRATION AND FLASHING DETAILS. MAINTAIN MINIMUM AIRSPACE CLEARANCE BETWEEN PANELS AND SHINGLES PER FIRE CODE AND MFR INSTRUCTIONS FOR PROPER VENTILATION.

PLAN NORTH TRUE NORTH

PBK
ARCHITECT PBK Architects, Inc.
PBK.com
SAN LUIS OBISPO
408 Higuera Street, Ste 100
San Luis Obispo, CA 93401
805-329-3076

FIRE STATION #44
COASTSIDE FIRE PROTECTION DISTRICT

501 STETSON STREET
MOSS BEACH, CA 94038
PLAN CHECK 02 RESPONSE

BID SET

KEY PLAN

PLAN NORTH TRUE NORTH

CLIENT
COASTSIDE FIRE PROTECTION DISTRICT
PROJECT NUMBER
230137
DATE 03/13/2026
DRAWN BY: KF/OS CHKED BY: AD

REVISIONS

#	DESCRIPTION	DATE

ROOF PLAN

This document is for plan review only

A4.1

5/29/2026 4:36:50 PM

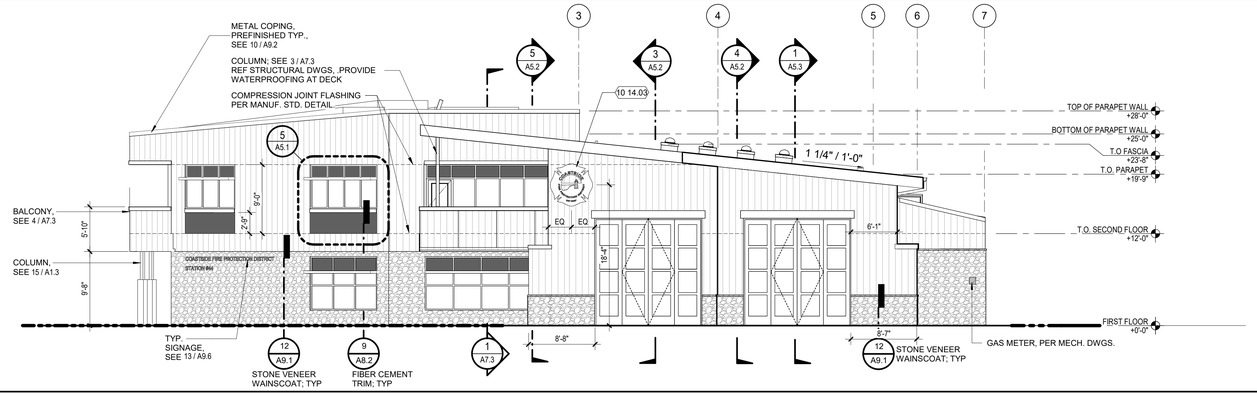

1 EXTERIOR ELEVATION - SOUTH
SCALE: 1/8" = 1'-0"

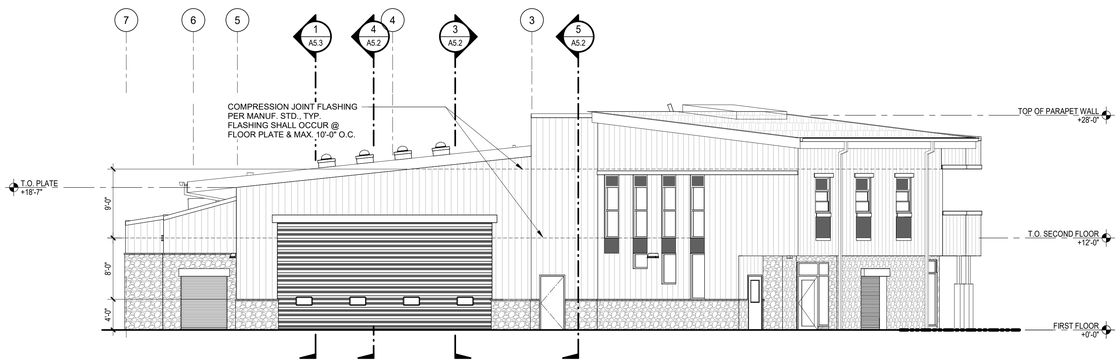

2 EXTERIOR ELEVATION - NORTH
SCALE: 1/8" = 1'-0"

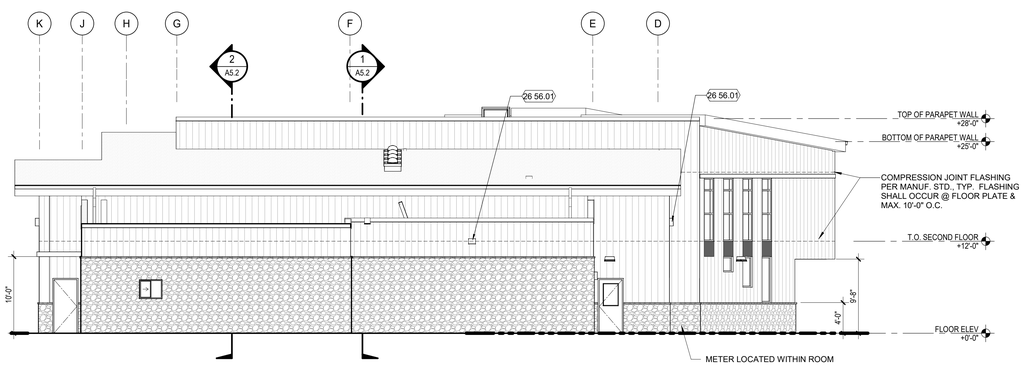

3 EXTERIOR ELEVATION - EAST
SCALE: 1/8" = 1'-0"

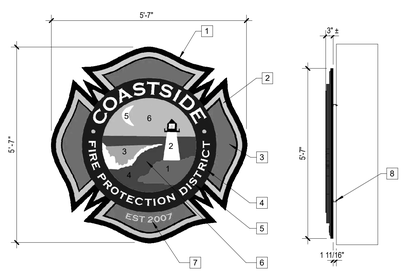

1 BASE
1" THICK HIGH DENSITY HIGH-DENSITY URETHANE
COLOR: SMOOTH BLACK

2 SHIELD BASE
1/4" THICK PAINTED ALUMINUM
COLOR:GOLD LEAF

3 SHIELD WITH TRIM
1/4" THICK PAINTED ALUMINUM
SHIELD: PMS 187C RED
TRIM: BLACK

4 OUTER CIRCLE
1" THICK HIGH DENSITY HIGH-DENSITY URETHANE
CIRCLE COLOR: PMS 2768C
CIRCLE DETAIL: GOLD LEAF

5 LETTERS
1/2" THICK ALUMINUM LETTERS
INSTALL LETTERS TIGHT TO OUTER CIRCLE SURFACE
COLOR: WHITE

6 CENTER CIRCLE
1/4" THICK ALUMINUM
(1) ROCK - PMS 438C
(2) LIGHTHOUSE: WHITE (STRUCTURE), BLACK (ROOF), PMS 116C (LIGHT)
(3) OCEAN WAVES: PMS 3115C AND WHITE
(4) OCEAN: PMS 301C
(5) MOON: WHITE
(6) SKY: PMS 3115C
INSTALL INNER CIRCLE TIGHT TO OUTER CIRCLE SURFACE

7 LETTERS AND NUMBERS
1/2" THICK ALUMINUM LETTERS
INSTALL LETTERS TIGHT TO SHIELD SURFACE
COLOR: GOLD LEAF

8 ATTACHEMENT
(2) 1-1/2" L-ANGLE ANCHORED TO WALL STUDS; COUNTERSUNK SCREW AND SILICONE TO SIGN STRUCTURE

4 FIRE STATION MEDALLION
SCALE: N.T.S.

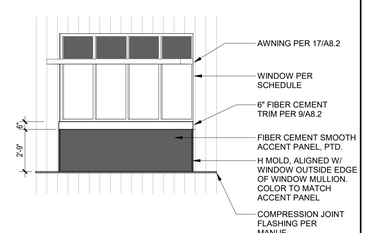

5 ACCENT PANEL TRIM
SCALE: 1/4" = 1'-0"

6 EXTERIOR ELEVATION - WEST
SCALE: 1/8" = 1'-0"

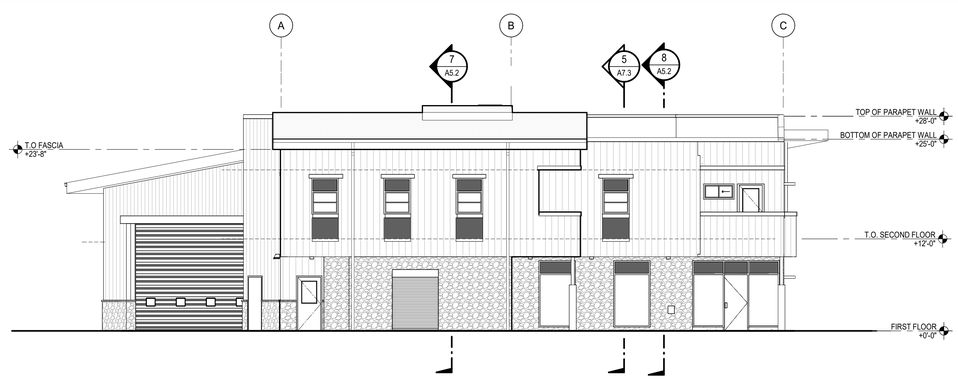

7 EXTERIOR ELEVATION - NORTHWEST
SCALE: 1/8" = 1'-0"

GENERAL NOTES

1. REFER TO MECHANICAL, ELECTRICAL, AND PLUMBING DRAWINGS FOR ADDITIONAL INFORMATION AND DEVICES NOT SHOWN ON THE ARCHITECTURAL DRAWINGS.
2. PROVIDE BACKING FOR ALL ACCESSORIES.
3. ALL EXTERIOR FINISHES EXPOSED TO VIEW SHALL BE PAINTED AS INDICATED BY ARCHITECT UNLESS FINISHES ARE FACTORY FINISHED.
4. REFER TO 4 / A9.1 & 8 / A9.3 FOR EXTERIOR WALL PENETRATION DETAIL.

EXTERIOR MATERIALS LEGEND

STONE VENEER, SEE SPECS & 15 / A9.1

FIBER CEMENT SIDING - WOOD-LOOK
SEE 11 / A9.1

FIBER CEMENT PANELS - WINDOW
SEE 11 / A9.1 & 9 / A8.2

KEYNOTES

10 14.03	BUILDING INDENTIFICATION SIGN & 4/-
26 56.01	EXTERIOR POLE MOUNT LIGHT FIXTURE FOR EMERGENCY OPERATIONS ONLY, ON +3'-6" HT. CONC. BASE, KEY SWITCH OPERATED, DIMMABLE W/ SHUTOFF TIMER, SED

PBK
ARCHITECT PBK Architects, Inc.
PBK.com
SAN LUIS OBISPO
408 Higuera Street, Ste 100
San Luis Obispo, CA 93401
805-329-3076

FIRE STATION #44
COASTSIDE FIRE PROTECTION DISTRICT

501 STETSON STREET
MOSS BEACH, CA 94038
PLAN CHECK 02 RESPONSE

BID SET

KEY PLAN
1ST 2ND
PLAN NORTH TRUE NORTH

CLIENT	
COASTSIDE FIRE PROTECTION DISTRICT	
PROJECT NUMBER	
230137	
DATE	03/13/2026
DRAWN BY: KF/OS	CHKED BY: AD

REVISIONS

#	DESCRIPTION	DATE

This document is for plan review only

EXTERIOR ELEVATIONS

A5.1

5/29/2026 4:36:57 PM

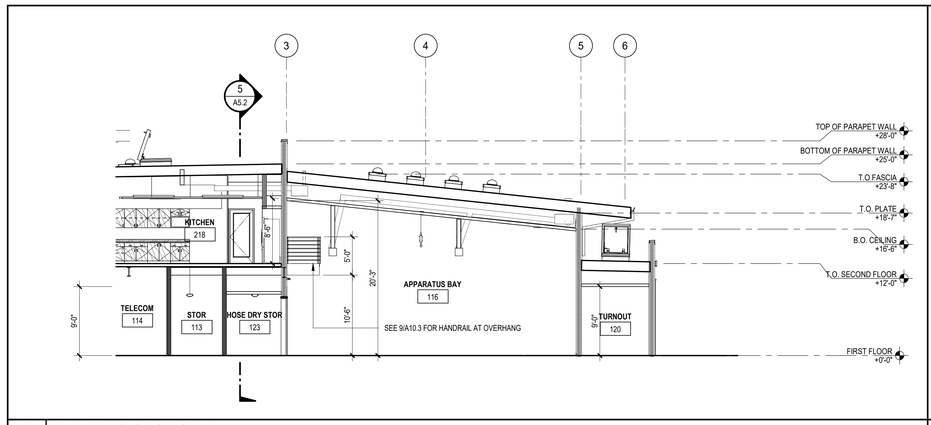

1 BUILDING SECTION 1
SCALE: 1/8" = 1'-0"

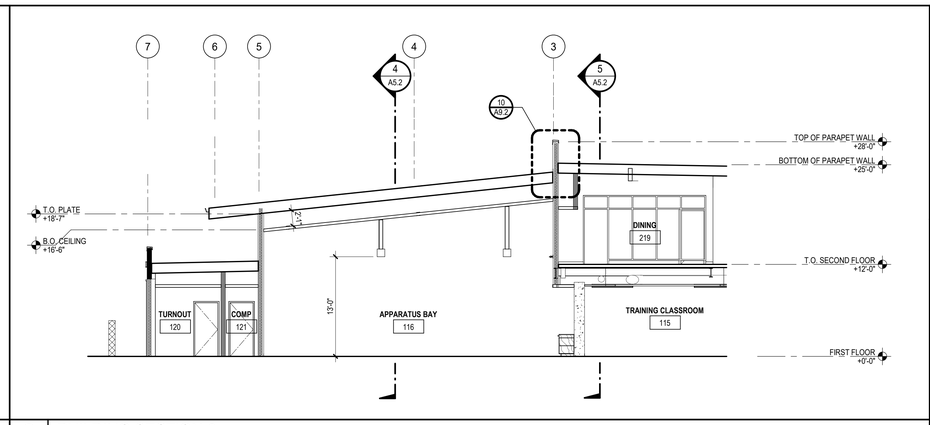

2 BUILDING SECTION 2
SCALE: 1/8" = 1'-0"

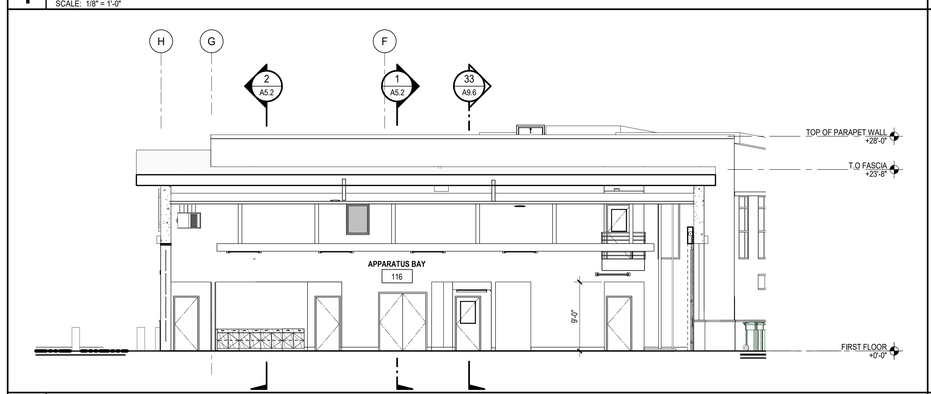

3 BUILDING SECTION 3
SCALE: 1/8" = 1'-0"

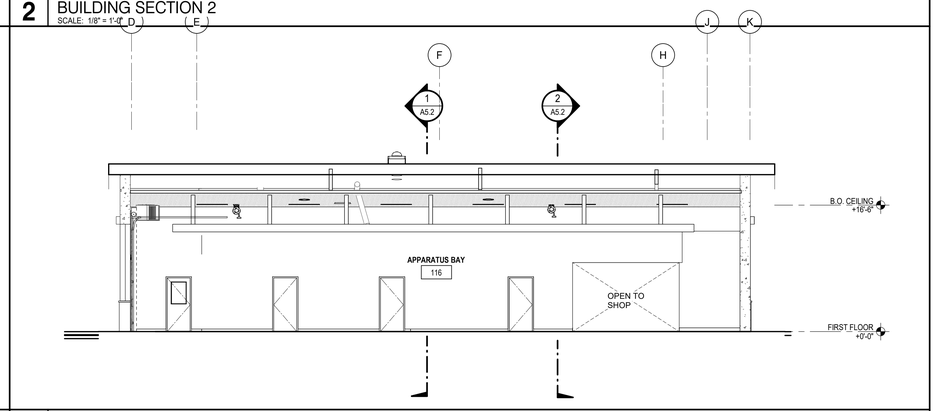

4 BUILDING SECTION 4
SCALE: 1/8" = 1'-0"

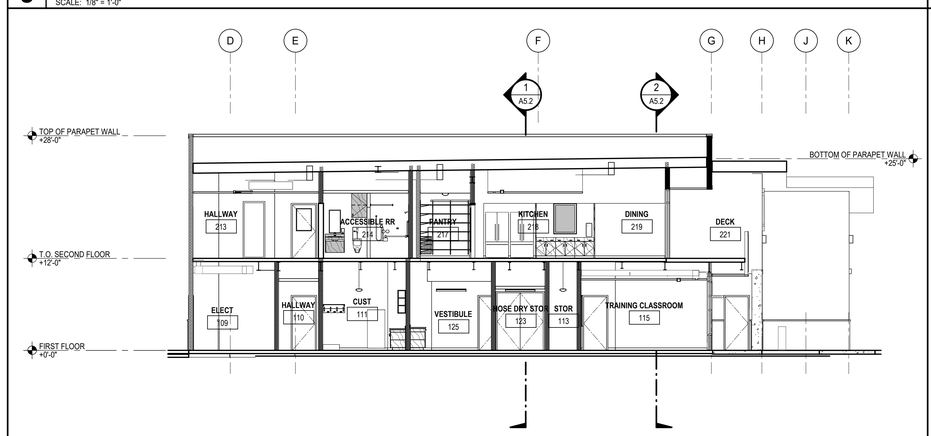

5 BUILDING SECTION 5
SCALE: 1/8" = 1'-0"

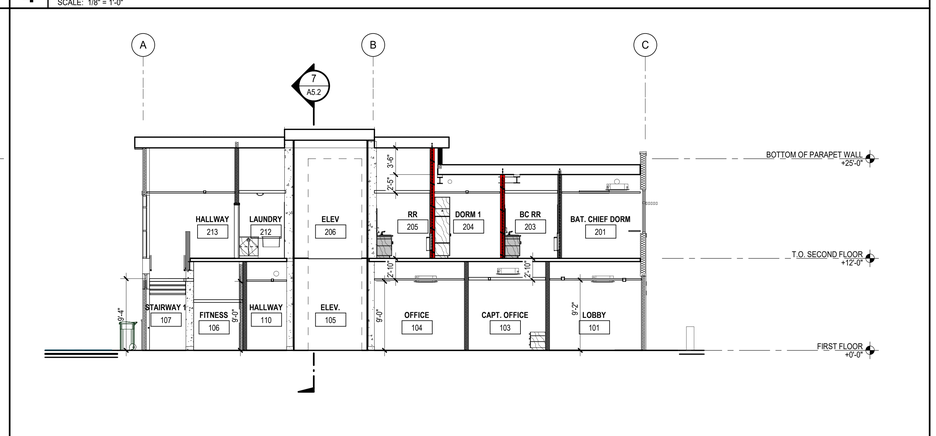

6 BUILDING SECTION 6
SCALE: 1/8" = 1'-0"

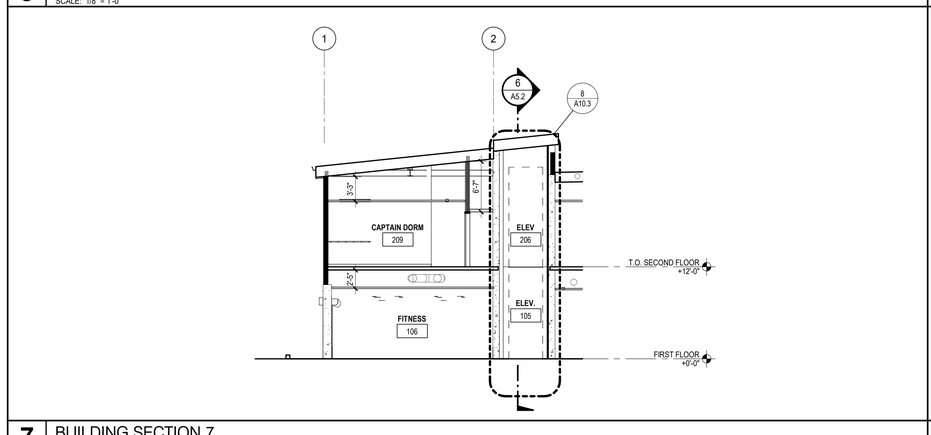

7 BUILDING SECTION 7
SCALE: 1/8" = 1'-0"

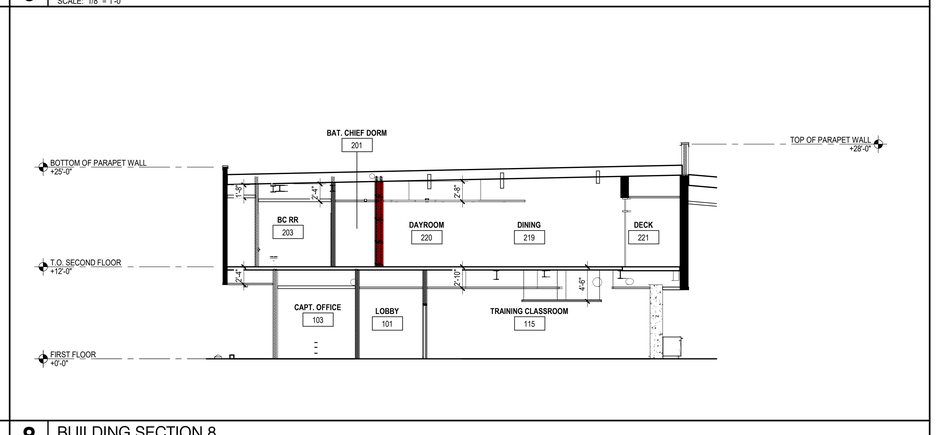

8 BUILDING SECTION 8
SCALE: 1/8" = 1'-0"

GENERAL NOTES

1. ALL EXTERIOR AND ROOF ASSEMBLIES ARE INSULATED.
2. SEE INSULATION SCHEDULE FOR INSULATION REQUIREMENTS
3. PROVIDE SOLID BACKING IN WALL AT ALL LOCATIONS OF WALL MOUNTED ITEMS.
4. REFER TO FINISH SCHEDULE A10.1 FOR ADDITIONAL FINISH INFO.
5. SECOND FLOOR 1-HR RATING PER UL DES D262. SEE 4/A9.6 FOR FLOOR-CEILING ASSEMBLY, AND 11/A9.3 FOR PENETRATION FIRESTOPPING THROUGH FLOOR.

INSULATION SCHEDULE

1. R-30: AT ALL ROOF (RIGID INSULATION)
2. R-21: AT ALL EXTERIOR WALLS AND ALL APPARATUS ROOM WALLS
3. R-19 ACOUSTICAL BATT INSULATION AT ALL OTHER INTERIOR 6" WALLS

PBK
ARCHITECT PBK Architects, Inc.
PBK.com
SAN LUIS OBISPO
408 Higuera Street, Ste 100
San Luis Obispo, CA 93401
805-329-3076

FIRE STATION #44
COASTSIDE FIRE PROTECTION DISTRICT

501 STETSON STREET
MOSS BEACH, CA 94038
PLAN CHECK 02 RESPONSE

BID SET

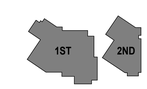

KEY PLAN
PLAN NORTH
TRUE NORTH

CLIENT
COASTSIDE FIRE PROTECTION DISTRICT
PROJECT NUMBER
230137
DATE 03/13/2026
DRAWN BY: KF/OS CHKED BY: AD
REVISIONS

#	DESCRIPTION	DATE

BUILDING SECTIONS

This document is for plan review only

A5.2

5/29/2026 4:37:02 PM

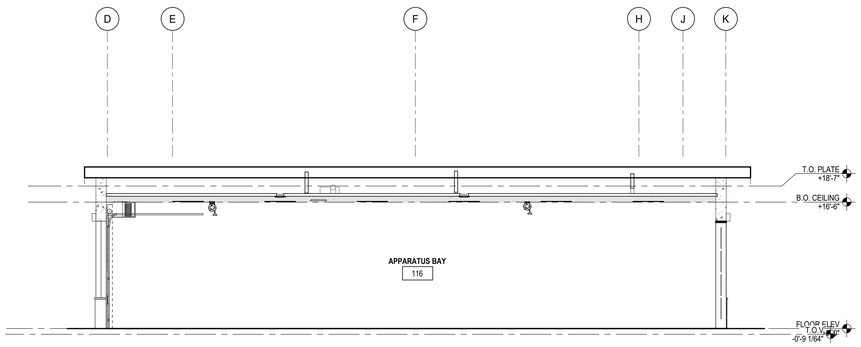

1 BUILDING SECTION 9
SCALE: 1/8" = 1'-0"

GENERAL NOTES

1. ALL EXTERIOR AND ROOF ASSEMBLIES ARE INSULATED.
2. SEE INSULATION SCHEDULE FOR INSULATION REQUIREMENTS
3. PROVIDE SOLID BACKING IN WALL AT ALL LOCATIONS OF WALL MOUNTED ITEMS.
4. REFER TO FINISH SCHEDULE A10.1 FOR ADDITIONAL FINISH INFO.
5. SECOND FLOOR 1-HR RATING PER UL DES D262. SEE 4/A9.6 FOR FLOOR-CEILING ASSEMBLY, AND 11/A9.3 FOR PENETRATION FIRESTOPPING THROUGH FLOOR.

INSULATION SCHEDULE

1. R-30: AT ALL ROOF (RIGID INSULATION)
2. R-21: AT ALL EXTERIOR WALLS AND ALL APPARATUS ROOM WALLS
3. R-19 ACOUSTICAL BATT INSULATION AT ALL OTHER INTERIOR 6" WALLS

PBK

ARCHITECT PBK Architects, Inc.
PBK.com
SAN LUIS OBISPO
408 Higuera Street, Ste 100
San Luis Obispo, CA 93401
805-329-3076

FIRE STATION #44
COASTSIDE FIRE PROTECTION DISTRICT

501 STETSON STREET
MOSS BEACH, CA 94038
PLAN CHECK 02 RESPONSE

BID SET

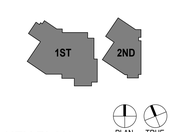

KEY PLAN

CLIENT
COASTSIDE FIRE
PROTECTION DISTRICT
PROJECT NUMBER
230137
DATE 03/13/2026
DRAWN BY: KF/OS CHKED BY: AD
REVISIONS

#	DESCRIPTION	DATE

BUILDING SECTIONS

A5.3

This document is for plan review only

5/29/2026 4:37:03 PM

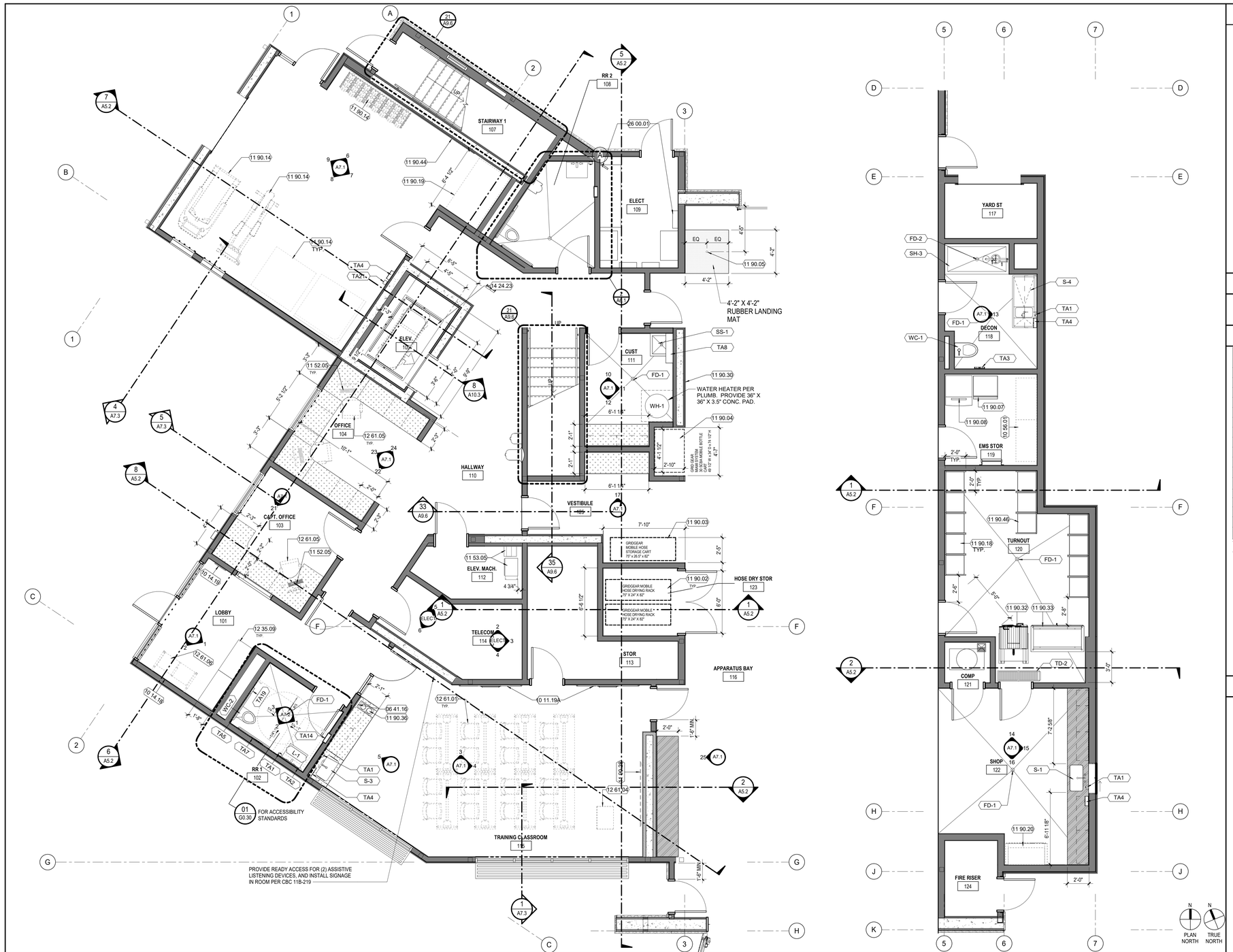

1 FIRST FLOOR ENLARGED PLANS

SCALE: 1/4" = 1'-0"

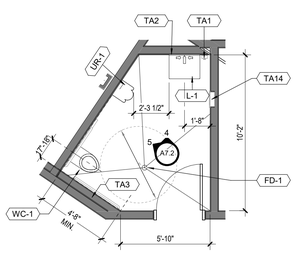

2 ENLARGED FLOOR PLAN - RR2(108)

SCALE: 1/4" = 1'-0"

KEYNOTES

06 41.16	8 INCH DIA. GROMMET, WITH TRASH & RECYCLING BINS BELOW (NIC)
10 11.19A	MARKERBOARD, SEE INTERIOR ELEVATIONS FOR SIZE, SPECS, PROVIDE BACKING, SEE DETAIL 10/A10.2
10 14.18	FIRE STATION MEDALLION SIGNAGE
10 14.19	DEDICATION PLAQUE, V.I.F. LOCATION, PROVIDE BACKING
10 56.01	METAL STORAGE SHELVING UNITS, N.I.C.
11 52.05	COMPUTER, N.I.C.
11 53.05	ELEVATOR EQUIPMENT, FROM MANUFACTURER
11 90.02	GRIDGEAR, MOBILE DRYING RACK, 75" W x 24" D x 82" H
11 90.03	GRIDGEAR, MOBILE HOSE STORAGE, 75" W x 26.5" D x 82" H
11 90.04	GRIDGEAR, SCBA MOBILE BOTTLE CART, 49 1/2 W x 34 D x 74 1/2"
11 90.05	SLIDE POLE & MAT, RECESS SLAB 3/4" TO RECEIVE MAT. SEE DETAIL 9/A10.3
11 90.07	UPRIGHT FREEZER, SEE SPEC
11 90.08	ICE MAKER, SEE SPECS
11 90.14	FITNESS EQUIPMENT, N.I.C.
11 90.18	GEARGRID 24"X24" WALL MOUNT LOCKER, SEE SPECS
11 90.19	SAUNA, NIC
11 90.20	TOOL CHEST, N.I.C.
11 90.28	DIGITAL MARKERBOARD, N.I.C, PROVIDE BLOCKING/WALL MOUNT, SEE DETAIL 14/A10.2
11 90.30	TELEVISION, N.I.C, PROVIDE BLOCKING/WALL MOUNT, SEE DETAIL 14/A10.2
11 90.32	EXTRACTOR, SEE SPECS AND PLUMBING DWGS.
11 90.33	PPE DRYING CABINET, SEE SPECS AND PLUMBING DWGS.
11 90.36	PLUMBED COFFEE MAKER, ADD COUNTERTOP GROMMET, SEE PLUMBING DWGS.
11 90.44	WALL MIRROR UP TO 8'-0" PROVIDE MIRRORED OUTLET COVERS, SEE SPECS
11 90.46	GEARGRID 24"X24" FREESTANDING LOCKER, SEE SPECS
12 35.09	DISPLAY CASE,SEE ELEVATIONS AND CASEWORK SCHEDULE

KEYNOTES

12 61.01	DESK AND CHAIRS, N.I.C.
12 61.04	PORTABLE PODUM/LECTURER, N.I.C.
12 61.05	OFFICE CHAIR, N.I.C.
12 61.06	LOBBY CHAIR, N.I.C.
14 24.23	ELEVATOR, SEE ELEVATOR NOTES & SPEC.
26 00.01	ELECTRICAL EQUIPMENT, SEE ELECT. DWGS.
FD-1	FLOOR DRAIN, SEE PLUMBING DWGS.
FD-2	FLOOR DRAIN (SHOWER), SEE PLUMBING DWGS.
L-1	LAVATORY, SEE PLUMBING DWGS.
S-1	KITCHEN SINK, SEE PLUMBING DWGS.
S-3	SINK, SEE PLUMBING DWGS.
S-4	DECON. SINK, SEE PLUMBING DWGS.
SH-3	SHOWER, DECON., SEE PLUMBING DWGS.
SS-1	SERVICE SINK, SEE PLUMBING DWGS.
TD-2	TRENCH DRAIN, SEE PLUMBING DWGS.
UR-1	URINAL, SEE PLUMBING DWGS.
WC-1	WATER CLOSET, SEE PLUMBING DWGS.
WC-2	WATER CLOSET, ACCESSIBLE, SEE PLUMBING DWGS.

GENERAL FLOOR PLAN NOTES

1. DO NOT SCALE DRAWINGS, WRITTEN DIMENSIONS TAKE PRECEDENCE, CONTACT ARCH IF CLARIFICATION IS NECESSARY IN ORDER TO DETERMINE THE INTENT OF THE CONTRACT DOCUMENTS
2. DRAWINGS NOTED AS "N.T.S" OR "NTS" ARE NOT TO SCALE
3. ALL DIMENSIONS ARE TO STRUCTURAL COLUMN LINES OR THE SURFACE OF PARTITION ASSEMBLY U.N.O.
4. FIELD VERIFY ALL DIMENSIONS AND EXISTING CONDITION BEFORE COMMENCING WORK. NOTIFY ARCH. OF ANY DISCREPANCIES PRIOR TO PROCEEDIN WITH AFFECTED WORK
5. NOTES OR DIMENSIONS NOTED AS "TYPICAL" OR "TYP." OR "TYP" SHALL APPLY TO CONDITIONS THAT ARE THE SAME OR SIMILAR
6. DIMENSIONS NOTED AS "FIELD VERIFY" OR "V.I.F." OR "VIF" SHALL BE MEASURED AND CONFIRMED AT THE PROJECT SITE BY THE CONTRACTOR AND REVIEWED WITH THE ARCH. BEFORE INCORPORATING INTO THE WORK
7. DIMENSIONS NOTED AS "CLEAR" OR "CLEAR INSIDE" REQUIRE SPECIFIC COORDINATION AMONG DISCIPLINES AND OR MANUFACTURERS
8. REFER TO PARTITION TYPES ON A9.3
9. ALL INTERIOR PARTITIONS THIS SHEET, EXCEPT FOR FURR-OUT PARTITIONS, SHALL BE WALL TYPE A U.N.O.
10. ALL INTERIOR FURR-OUT PARTITIONS THIS SHEET SHALL BE PARTITION TYPE B U.N.O.
11. ALIGN FINISHED FACE OF WALLS WHERE WALL PARTITIONS OF DIFFERING THICKNESS ABUT AND OR ADJOIN IN THE SAME PLANE
12. ALL DOORS SHALL BE SET 6 INCHES OFF THE ADJACENT PERPENDICULAR WALL ON THE HINGE SIDE OF THE DOOR U.N.O.. NOTIFY ARCH. OF ANY DOOR-RELATED CONFLICTS, INCLUDING BUT NOT LIMITED TO CONFLICTS CONCERNING ACCESSIBILITY STANDARDS
13. ALL DOOR THRESHOLDS AT ALL EXTERIOR DOORS SHALL BE SET IN FULL BED OF SEALANT
14. COORD. ALL ROOF DRAIN LEADER LOCATIONS WITH FLOOR PLAN PRIOR TO FLOOR SLAB CONSTRUCTION
15. ALL FLOOR SLOPES TO FLOOR DRAINS SHALL NOT EXCEED 1:48
16. PROVIDE AND INSTALL SELF-LEVELING UNDERLAYMENT WHERE UNEVEN FLOOR SLAB EXISTS PRIOR TO INSTALLATION OF FLOOR FINISHES
17. COORD. HOUSEKEEPING PAD LOCATIONS AND DIMENSIONS WITH EQUIPMENT TO BE INSTALLED
18. ALL FLOOR FINISH CHANGES SHALL OCCUR AT THE CENTERLINE OF DOORS U.N.O.
19. ALL FLOOR FINISH MATERIAL CHANGES SHALL HAVE REDUCER STRIPS
20. ALL REQUIRED ACCESSIBLE CLEARANCES FOR ALL ITEMS, INCLUDING BUT NOT LIMITED TO ALL COUNTER TOPS, ALL PLUMBING FIXTURES, ALL DRINKING FOUNTAINS, ALL ELECTRIC WATER COOLERS, ALL LAVATORIES, ALL URINALS, ALL TOILETS SHALL BE STRICTLY ENFORCED
21. REFER TO OTHER DISCIPLINE DOCUMENTS FOR ADDITIONAL SCOPE OF WORK

ELEVATOR NOTES

BASIS OF DESIGN IS KONE MONOSPACE 500 DX. INTERIOR DIMENSIONS ARE APPROXIMATELY 7' W x 4' 5" D PER MANUFACTURER (MIN. 54" FROM BACK WALL TO INSIDE FACE OF DOOR). ELEVATOR IS TO BE FULLY ACCESSIBLE AND COMPLY WITH 11B-407

TOILET ACCESSORIES SCHEDULE

MARK	DESCRIPTION	BOBRICK MODEL NO. (UON)	REMARKS	DETAIL	QUANTITY
TA1	SURFACE-MOUNTED SOAP DISPENSER	BOB B-2111	5		
TA2	24" X 36" OR 18" X 36" GLASS MIRROR - SEE INT. ELEV.	BOB B-290	4		
TA3	RECESSED TOILET TISSUE DISPENSER	BOB B-6977	4		
TA4	SURFACE-MOUNTED PAPER TOWEL DISPENSER	BOB B-262	4		
TA5	REAR WALL GRAB BAR 36" W/ ANCHOR PLATE	BOB B-6806	3	3 / A10.3	
TA5	SIDE WALL GRAB BAR 42" W/ ANCHOR PLATE	BOB B-6806	3	3 / A10.3	
TA7	SANITARY NAPKIN DISPOSAL AND TOILET PAPER DISPENSER	BOB B-3094			
TA8	SURFACE-MOUNTED MOP AND BROOM HOLDER	BOB B-239			
TA9	SHOWER GRAB BARS MODIFIED TO 24" X 16"	BOB B-6861			
TA10	FOLDING SHOWER BENCH: ADULT HEIGHT	BOB B-5181		3 / A6.2	
TA11	CLOTHES HOOK	BOB B-6717			
TA12	SHOWER CURTAIN	INPRO-SUPER BIO STAT			
TA12	SHOWER ROD	BOB B-207			
TA12	SHOWER HOOKS	BOB B-204-1			
TA14	PAPER TOWEL DISPENSER/TRASH RECEPTACLE COMBO	BOB B-38034			
TA17	TRASH RECEPTACLE	BOB B-43644			
TA21	HAND SANITIZER DISPENSER	BOB B-2012			

NOTES	REMARKS LEGEND
- PROVIDE ABOVE LISTED ACCESSORIES AT LOCATION INDICATED PER PLAN	1. REF SPECS FOR MANUFACTURER AND MODEL NO.
- REFER TO G0.30 FOR ACCESSIBILITY GUIDELINES FOR MOUNTING HEIGHTS OF ALL PLUMBING FIXTURES AND ACCESSORIES	2. REF TO FLOOR PLANS FOR LEFT /RIGHT-HAND MODEL LOCATIONS.
- REFER TO DETAIL 14 / A9.6 FOR MOUNTING HEIGHT SCHEDULE	3. MAX PROJECTION 1-1/2" CLEAR GRAB BAR
- MAX 2% SLOPE AT FLOOR; SLOPE TO FLOOR DRAINS PER PLAN	4. 4" MAX PROJECTION IF BOTTOM OF UNIT IS ABOVE 27" A.F.F.
- ALL LAVATORIES TO HAVE MIRROR, UNLESSOTHERWISE SPECIFICALLY NOTED	5. ACCESSORY TO BE CLEAR FROM ACCESSIBLE PATH OF TRAVEL
- REFER TO SPEC SECTION **10 28 13**	

FLOOR PLAN LEGEND

- 123 — ROOM NUMBER
- CASEWORK; AS PER SCHEDULE AND DETAILS ON SHEET A10.4 AND A10.5
- 42" HIGH WALL
- 1066 — DOOR DESIGNATION
- A — WINDOW DESIGNATION
- 60 STC — 1-HR RATED WALL, (MIN. 50 STC AT DORM ROOMS): 6" WOOD STUDS @ 16" O.C., WITH ONE LAYER OF 5/8" TYPE X GYPSUM BOARD EACH SIDE, FROM TOP OF FOUNDATION/ TOP OF SLAB TO UNDERSIDE OF ROOF DECK. REF. UL 309, U341 . SEE 10 / A9.3 FOR WALL PENETRATION DETAILS.
- PARTITION TYPE — *REFER TO SHEET* **A9.3** *FOR DEFINITION*
- PROVIDE IDENTIFICATION MARK IN 3" HIGH TEXT TO READ "FIRE BARRIER/ FIRE PARTITION - PROTECT ALL OPENINGS" IN ATTIC SPACE AT INTERVAL NOT EXCEEDING 30 FEET AND WITHIN 15 FEET OF THE END OF EACH WALL ALONG BOTH SIDES OF THE WALL. PAINTED RED. 2022 CBC, SECTION 703.3., SEE SIGNAGE SCHED. ON 8 / A9.7
- CONCRETE SHEAR WALL. SEE STRUCT. DWGS FOR WALL THICKNESS & EXTENT. PROVIDE FURRING STRIPS WITH ONE LAYER OF 5/8" GYPSUM BOARD EACH SIDE, PAINTED. SEE STRUCTURAL DWGS.
- 2x FLAT FURRING STRIPS WITH ONE LAYER OF 5/8" GYPSUM BOARD, PAINTED. SEE A9.3
- 2x4 FURRING WITH ONE LAYER OF 5/8" GYPSUM BOARD, PAINTED.
- 6" WOOD STUDS @ 16" O.C.; AT INTERIOR LOCATIONS PROVIDE ONE LAYER OF 5/8" GYPSUM BOARD EACH SIDE. PAINTED. AT EXTERIOR LOCATIONS PROVIDE ONE LAYER OF 5/8" GYPSUM BOARD AT INTERIOR SIDE, PAINTED, AND ON EXTERIOR SIDE, U.N.O.
- STONE VENEER WAINSCOT FINISH OVER BROWNCOAT, SEE DETAIL 15 / A9.1
- FIRE EXTINGUISHER CABINET, SEE DETAIL 13 / A10.2

MATERIALS LEGEND

- SS-1 SOLID SURFACE W/4" H INTEGRAL BACKSPLASH RE: SEE FINISH SCHEDULE
- SS-2 SOLID SURFACE RE: SEE FINISH SCHEDULE
- MC-1 STAIN. STEEL COUNTER W/4" H INTEGRAL BACKSPLASH RE: SEE FINISH SCHEDULE
- BUNK BED SEE SPECS
- MOTORIZED ROLLER WINDOW SHADE
- MANUAL ROLLER WINDOW SHADE
- MANUAL ROLLER WINDOW BLACK-OUT SHADE
- NIC
- TA12 SHOWER ROD - SEE TOILET ACCESSORIES SCHEDULE

PBK

ARCHITECT PBK Architects, Inc.
PBK.com
SAN LUIS OBISPO
408 Higuera Street, Ste 100
San Luis Obispo, CA 93401
805-329-3076

FIRE STATION #44
COASTSIDE FIRE PROTECTION DISTRICT

501 STETSON STREET
MOSS BEACH, CA 94038
PLAN CHECK 02 RESPONSE

BID SET

1ST 2ND
KEY PLAN
PLAN NORTH TRUE NORTH

CLIENT
COASTSIDE FIRE PROTECTION DISTRICT
PROJECT NUMBER
230137
DATE 03/13/2026
DRAWN BY: KF/OS CHKED BY: AD
REVISIONS

#	DESCRIPTION	DATE

This document is for plan review only

ENLARGED PLANS

A6.1

5/29/2026 4:37:10 PM

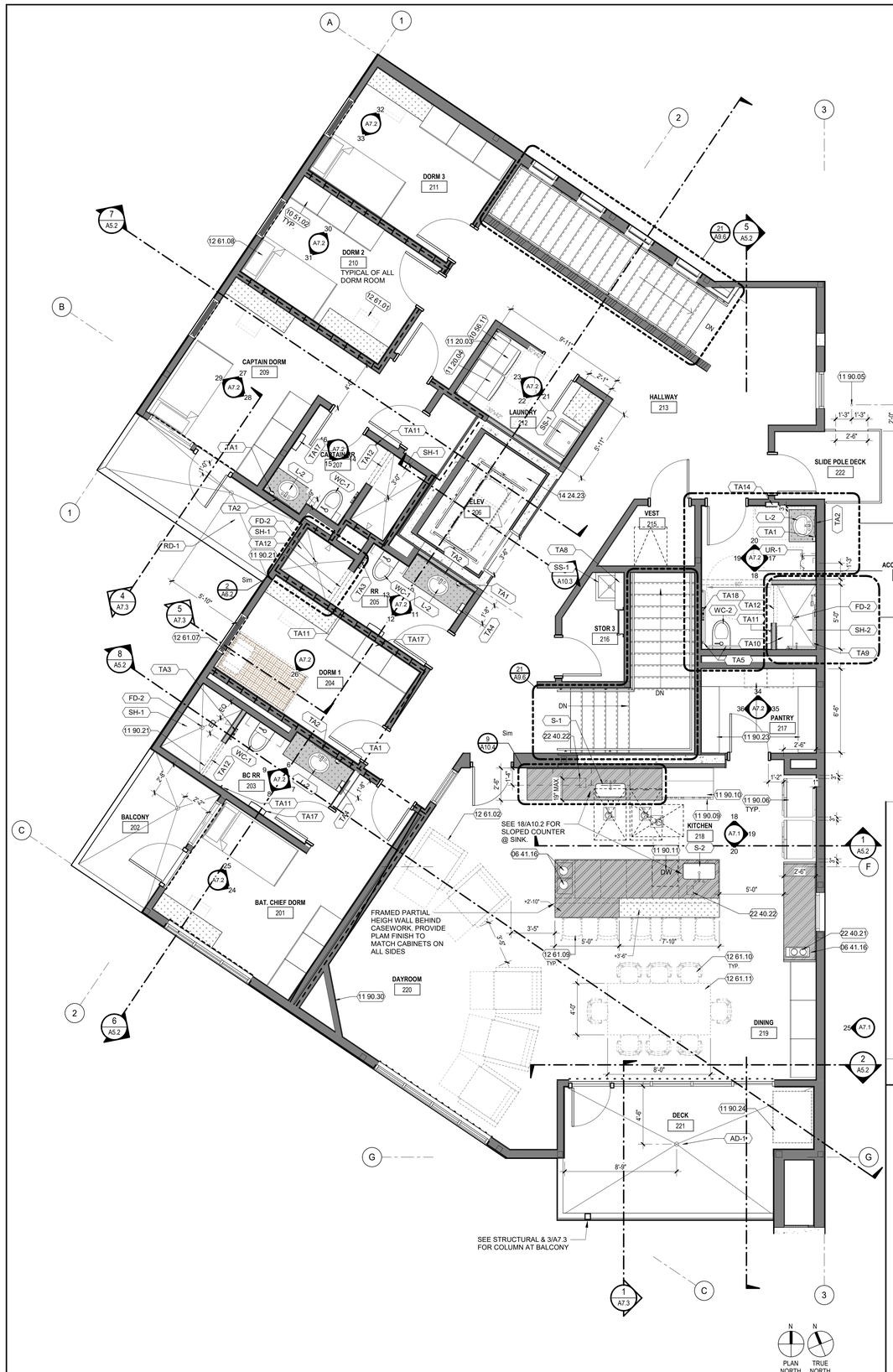

1 SECOND FLOOR ENLARGED PLAN
SCALE: 1/4" = 1'-0"

TOILET ACCESSORIES SCHEDULE

MARK	DESCRIPTION	BOBRICK MODEL NO. (UON)	REMARKS	DETAIL	QUANTITY
TA1	SURFACE-MOUNTED SOAP DISPENSER	BOB B-2111	5		
TA2	24" X 36" OR 18" X 36" GLASS MIRROR - SEE INT. ELEV.	BOB B-290	4		
TA3	RECESSED TOILET TISSUE DISPENSER	BOB B-6977	4		
TA4	SURFACE-MOUNTED PAPER TOWEL DISPENSER	BOB B-262	4		
TA5	REAR WALL GRAB BAR 36" W/ ANCHOR PLATE	BOB B-6806	3	3 / A10.3	
TA5	SIDE WALL GRAB BAR 42" W/ ANCHOR PLATE	BOB B-6806	3	3 / A10.3	
TA7	SANITARY NAPKIN DISPOSAL AND TOILET PAPER DISPENSER	BOB B-3094			
TA8	SURFACE-MOUNTED MOP AND BROOM HOLDER	BOB B-239			
TA9	SHOWER GRAB BARS MODIFIED TO 24" X 16"	BOB B-6861			
TA10	FOLDING SHOWER BENCH: ADULT HEIGHT	BOB B-5181		3 / A6.2	
TA11	CLOTHES HOOK	BOB B-6717			
TA12	SHOWER CURTAIN	INPRO-SUPER BIO STAT			
TA12	SHOWER ROD	BOB B-207			
TA12	SHOWER HOOKS	BOB B-204-1			
TA14	PAPER TOWEL DISPENSER/TRASH RECEPTACLE COMBO	BOB B-38034			
TA17	TRASH RECEPTACLE	BOB B-43644			
TA21	HAND SANITIZER DISPENSER	BOB B-2012			

NOTES	REMARKS LEGEND
- PROVIDE ABOVE LISTED ACCESSORIES AT LOCATION INDICATED PER PLAN	1. REF SPECS FOR MANUFACTURER AND MODEL NO.
- REFER TO G0.30 FOR ACCESSIBILITY GUIDELINES FOR MOUNTING HEIGHTS OF ALL PLUMBING FIXTURES AND ACCESSORIES	2. REF TO FLOOR PLANS FOR LEFT /RIGHT-HAND MODEL LOCATIONS.
- REFER TO DETAIL 14 / A9.6 FOR MOUNTING HEIGHT SCHEDULE	3. MAX PROJECTION 1-1/2" CLEAR GRAB BAR
- MAX 2% SLOPE AT FLOOR; SLOPE TO FLOOR DRAINS PER PLAN	4. 4" MAX PROJECTION IF BOTTOM OF UNIT IS ABOVE 27" A.F.F.
- ALL LAVATORIES TO HAVE MIRROR, UNLESSOTHERWISE SPECIFICALLY NOTED	5. ACCESSORY TO BE CLEAR FROM ACCESSIBLE PATH OF TRAVEL
- REFER TO SPEC SECTION **10 28 13**	

GENERAL FLOOR PLAN NOTES

1. DO NOT SCALE DRAWINGS, WRITTEN DIMENSIONS TAKE PRECEDENCE, CONTACT ARCH IF CLARIFICATION IS NECESSARY IN ORDER TO DETERMINE THE INTENT OF THE CONTRACT DOCUMENTS
2. DRAWINGS NOTED AS "N.T.S" OR "NTS" ARE NOT TO SCALE
3. ALL DIMENSIONS ARE TO STRUCTURAL COLUMN LINES OR THE SURFACE OF PARTITION ASSEMBLY U.N.O.
4. FIELD VERIFY ALL DIMENSIONS AND EXISTING CONDITION BEFORE COMMENCING WORK. NOTIFY ARCH. OF ANY DISCREPANCIES PRIOR TO PROCEEDIN WITH AFFECTED WORK
5. NOTES OR DIMENSIONS NOTED AS "TYPICAL" OR "TYP." OR "TYP" SHALL APPLY TO CONDITIONS THAT ARE THE SAME OR SIMILAR
6. DIMENSIONS NOTED AS "FIELD VERIFY" OR "V.I.F." OR "VIF" SHALL BE MEASURED AND CONFIRMED AT THE PROJECT SITE BY THE CONTRACTOR AND REVIEWED WITH THE ARCH. BEFORE INCORPORATING INTO THE WORK
7. DIMENSIONS NOTED AS "CLEAR" OR "CLEAR INSIDE" REQUIRE SPECIFIC COORDINATION AMONG DISCIPLINES AND OR MANUFACTURERS
8. REFER TO PARTITION TYPES ON A9.3
9. ALL INTERIOR PARTITIONS THIS SHEET, EXCEPT FOR FURR-OUT PARTITIONS, SHALL BE WALL TYPE A U.N.O.
10. ALL INTERIOR FURR-OUT PARTITIONS THIS SHEET SHALL BE PARTITION TYPE B U.N.O.
11. ALIGN FINISHED FACE OF WALLS WHERE WALL PARTITIONS OF DIFFERING THICKNESS ABUT AND OR ADJOIN IN THE SAME PLANE
12. ALL DOORS SHALL BE SET 6 INCHES OFF THE ADJACENT PERPENDICULAR WALL ON THE HINGE SIDE OF THE DOOR U.N.O., NOTIFY ARCH. OF ANY DOOR-RELATED CONFLICTS, INCLUDING BUT NOT LIMITED TO CONFLICTS CONCERNING ACCESSIBILITY STANDARDS
13. ALL DOOR THRESHOLDS AT ALL EXTERIOR DOORS SHALL BE SET IN FULL BED OF SEALANT
14. COORD. ALL ROOF DRAIN LEADER LOCATIONS WITH FLOOR PLAN PRIOR TO FLOOR SLAB CONSTRUCTION
15. ALL FLOOR SLOPES TO FLOOR DRAINS SHALL NOT EXCEED 1:48
16. PROVIDE AND INSTALL SELF-LEVELING UNDERLAYMENT WHERE UNEVEN FLOOR SLAB EXISTS PRIOR TO INSTALLATION OF FLOOR FINISHES
17. COORD. HOUSEKEEPING PAD LOCATIONS AND DIMENSIONS WITH EQUIPMENT TO BE INSTALLED
18. ALL FLOOR FINISH CHANGES SHALL OCCUR AT THE CENTERLINE OF DOORS U.N.O.
19. ALL FLOOR FINISH MATERIAL CHANGES SHALL HAVE REDUCER STRIPS
20. ALL REQUIRED ACCESSIBLE CLEARANCES FOR ALL ITEMS, INCLUDING BUT NOT LIMITED TO ALL COUNTER TOPS, ALL PLUMBING FIXTURES, ALL DRINKING FOUNTAINS, ALL ELECTRIC WATER COOLERS, ALL LAVATORIES, ALL URINALS, ALL TOILETS SHALL BE STRICTLY ENFORCED
21. REFER TO OTHER DISCIPLINE DOCUMENTS FOR ADDITIONAL SCOPE OF WORK

ELEVATOR NOTES

BASIS OF DESIGN IS KONE MONOSPACE 500 DX. INTERIOR DIMENSIONS ARE APPROXIMATELY 7' W x 4' 5" D PER MANUFACTURER (MIN. 54" FROM BACK WALL TO INSIDE FACE OF DOOR). ELEVATOR IS TO BE FULLY ACCESSIBLE AND COMPLY WITH 11B-407

FLOOR PLAN LEGEND

- 123 — ROOM NUMBER
- CASEWORK; AS PER SCHEDULE AND DETAILS ON SHEET A10.4 AND A10.5
- 42" HIGH WALL
- 1068 — DOOR DESIGNATION
- A — WINDOW DESIGNATION
- 1-HR RATED WALL, (MIN. 50 STC AT DORM ROOMS); 6" WOOD STUDS @ 16" O.C., WITH ONE LAYER OF 5/8" TYPE X GYPSUM BOARD EACH SIDE, FROM TOP OF FOUNDATION/ TOP OF SLAB TO UNDERSIDE OF ROOF DECK. REF. UL 309, U341 . SEE 10 / A9.3 FOR WALL PENETRATION DETAILS.
- 65" — PARTITION TYPE *REFER TO SHEET* **A9.3** *FOR DEFINITION* — PROVIDE IDENTIFICATION MARK IN 3" HIGH TEXT TO READ "FIRE BARRIER/ FIRE PARTITION - PROTECT ALL OPENINGS" IN ATTIC SPACE AT INTERVAL NOT EXCEEDING 30 FEET AND WITHIN 15 FEET OF THE END OF EACH WALL ALONG BOTH SIDES OF THE WALL. PAINTED RED. 2022 CBC, SECTION 703.3., SEE SIGNAGE SCHED. ON 8 / A9.7
- CONCRETE SHEAR WALL. SEE STRUCT. DWGS FOR WALL THICKNESS & EXTENT. PROVIDE FURRING STRIPS WITH ONE LAYER OF 5/8" GYPSUM BOARD EACH SIDE, PAINTED. SEE STRUCTURAL DWGS.
- 2x FLAT FURRING STRIPS WITH ONE LAYER OF 5/8" GYPSUM BOARD, PAINTED. SEE A9.3
- 2x4 FURRING WITH ONE LAYER OF 5/8" GYPSUM BOARD, PAINTED.
- 6" WOOD STUDS @ 16" O.C.; AT INTERIOR LOCATIONS PROVIDE ONE LAYER OF 5/8" GYPSUM BOARD EACH SIDE, PAINTED. AT EXTERIOR LOCATIONS PROVIDE ONE LAYER OF 5/8" GYPSUM BOARD AT INTERIOR SIDE, PAINTED, AND ON EXTERIOR SIDE, U.N.O.
- STONE VENEER WAINSCOT FINISH OVER BROWNCOAT, SEE DETAIL 15 / A9.1
- FIRE EXTINGUISHER CABINET, SEE DETAIL 13 / A10.2

MATERIALS LEGEND

- SS-1 SOLID SURFACE W/4" H INTEGRAL BACKSPLASH RE: SEE FINISH SCHEDULE SEE DETAIL 15 / A10.4
- SS-2 SOLID SURFACE RE: SEE FINISH SCHEDULE SEE DETAIL 15 / A10.4
- MC-1 STAIN. STEEL COUNTER W/4" H INTEGRAL BACKSPLASH RE: SEE FINISH SCHEDULE SEE DETAIL 15 / A10.4
- **WS-3** MOTORIZED ROLLER WINDOW 3% SHADE, SEE DET. 4 / A10.3
- **WS-1** MANUAL ROLLER WINDOW 3% SHADE, SEE DETAIL 5 / A10.3
- **WS-2** MANUAL ROLLER WINDOW BLACK-OUT SHADE, SEE DETAIL 3 / A10.3 PROVIDE AT DORM WINDOWS + DOORS
- N.I.C. - NOT IN CONTRACT (OFCI)
- SHOWER ROD - SEE SPECS
- REMOVEABLE SHOWER SILL - SEE DETAIL 12 / A10.2
- BUNK BED, N.I.C. SEE SPECS

KEYNOTES

06 41.16	8 INCH DIA. GROMMET, WITH TRASH & RECYCLING BINS BELOW (NIC)
10 51.02	LOCKERS, STORAGE
10 56.11	METAL WIRE UTILITY SHELVING SYSTEM, SEE ELEVATIONS AND SPECS
11 20.03	WASHER, SEE SPECS AND PLUMBING DWGS.
11 20.04	DRYER, SEE SPECS AND PLUMBING DWGS.
11 90.05	SLIDE POLE & MAT, RECESS SLAB 3/4" TO RECEIVE MAT. SEE DETAIL 9/A10.3
11 90.06	REFRIGERATOR/FREEZER COMBINATION, SEE SPECS
11 90.09	GAS RANGE, SEE SPECS AND PLUMBING DWGS
11 90.10	RANGE HOOD, SEE SPECS AND PLUMBING DWGS.
11 90.11	DISHWASHER, SEE SPECS
11 90.21	REMOVEABLE SHOWER SILL PER 12/A10.2
11 90.23	METAL WIRE UTILITY SHELVING SYSTEM, SEE ELEVATIONS AND SPECS
11 90.24	BBQ, N.I.C.
11 90.30	TELEVISION, N.I.C, PROVIDE BLOCKING/WALL MOUNT, SEE DETAIL 14/A10.2
12 61.01	DESK AND CHAIRS, N.I.C.
12 61.02	RECLINER, N.I.C.
12 61.07	BUNK BED, N.I.C.
12 61.08	BUILT-IN BED
12 61.09	BAR STOOLS, N.I.C.
12 61.10	DINING TABLE CHAIRS, N.I.C.
12 61.11	DINING TABLE, N.I.C.
14 24.23	ELEVATOR, SEE ELEVATOR NOTES & SPEC.
22 40.21	PLUMBED COFFEE MAKER, ADD COUNTERTOP GROMMET, SEE PLUMBING DWGS.
22 40.22	REVERSE OSMOSIS DRINKING WATER PER PLUMBING DRAWINGS
AD-1	AREA DRAIN, SEE PLUMBING DWGS.
FD-2	FLOOR DRAIN (SHOWER), SEE PLUMBING DWGS.
L-2	LAVATORY, UNDERCOUNTER, SEE PLUMBING DWGS. AND MATERIAL SCHEDULE
RD-1	ROOF DRAIN, SEE PLUMBING DWGS.
S-1	KITCHEN SINK, SEE PLUMBING DWGS.

KEYNOTES

S-2	KITCHEN SINK, SEE PLUMBING DWGS.
SH-1	SHOWER, SEE PLUMBING DWGS.
SH-2	SHOWER, ACCESSIBLE, SEE PLUMBING DWGS. & 2/A6.2 FOR TYPICAL FINISH ELEVATIONS
SS-1	SERVICE SINK, SEE PLUMBING DWGS.
UR-1	URINAL, SEE PLUMBING DWGS.
WC-1	WATER CLOSET, SEE PLUMBING DWGS.
WC-2	WATER CLOSET, ACCESSIBLE, SEE PLUMBING DWGS.

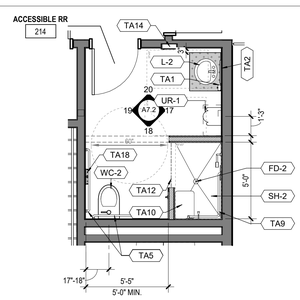

4 FP02 - SECOND FLOOR ENLARGED PLAN
SCALE: 1/4" = 1'-0"

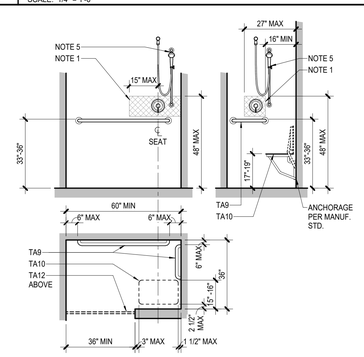

ALTERNATE ROLL-IN COMPARTMENT

NOTES:
1. LOCATE CONTROLS (MIXING / DIVERTER VALVE) WITHIN THE HATCHED AREA RE CBC 11B-608.5.
2. SPRAY UNIT SHALL HAVE ON/OFF CONTROL WITH NON-POSITIVE SHUT-OFF AND DELIVER WATER THAT IS 120°F(49°C) MAXIMUM.
3. DIMENSIONS AND NOTES REPRESENT THE MINIMUM REQUIREMENTS. ACTUAL INSTALLATION CONFIGURATIONS ARE SHOWN ON THE ENLARGED PLANS.
4. ALL DIMENSIONS TO FACE OF FINISHED SURFACE / CENTERLINE OF FIXTURE U.N.O.
5. HEIGHT ADJUSTABLE FIXED / HAND-HELD SHOWER SPRAY UNIT WITH 59" MINIMUM LENGTH HOSE. RE: PLUMBING FIXTURE SCHEDULE

3 ACCESSIBLE SHOWER COMPARTMENTS
SCALE: 3/8" = 1'-0"

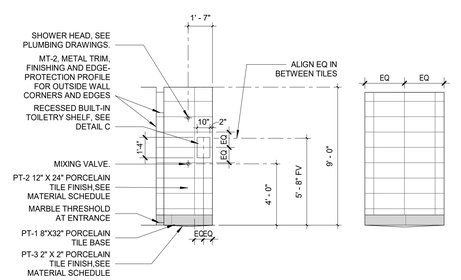

A: TYPICAL ELEVATION AT SHOWERHEAD

B: TYPICAL REAR ELEVATION

C: SECTION THROUGH BUILT-IN TOILETRY SHELF
SCALE: 1 1/2" = 1'-0".

NOTES:
1. FOR TYPICAL TILE PATTERN, SEE DETAIL B AND DETAIL 19 / A10.2
2. FOR SECTION THROUGH TYPICAL SHOWER, SEE DETAIL 3 / A10.2

2 TYPICAL SHOWER ELEVATIONS
SCALE: 1/4" = 1'-0"

PBK
ARCHITECT PBK Architects, Inc.
PBK.com
SAN LUIS OBISPO
408 Higuera Street, Ste 100
San Luis Obispo, CA 93401
805-329-3076

FIRE STATION #44
COASTSIDE FIRE PROTECTION DISTRICT
501 STETSON STREET
MOSS BEACH, CA 94038
PLAN CHECK 02 RESPONSE

BID SET

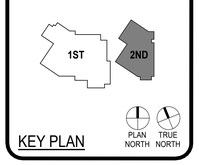

KEY PLAN

CLIENT
COASTSIDE FIRE PROTECTION DISTRICT
PROJECT NUMBER
230137
DATE 03/13/2026
DRAWN BY: KF/OS CHKED BY: AD

REVISIONS

#	DESCRIPTION	DATE

ENLARGED PLANS

This document is for plan review only

A6.2

5/29/2026 4:37:14 PM

A7.1 - INTERIOR ELEVATIONS

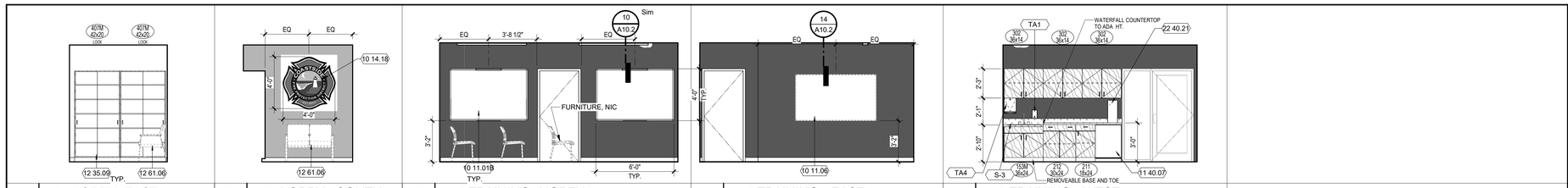

1 101 LOBBY- EAST
SCALE: 1/4" = 1'-0"

2 101 LOBBY - SOUTH
SCALE: 1/4" = 1'-0"

3 115 TRAINING- NORTH
SCALE: 1/4" = 1'-0"

4 115 TRAINING - EAST
SCALE: 1/4" = 1'-0"

5 115 TRAINING - WEST
SCALE: 1/4" = 1'-0"

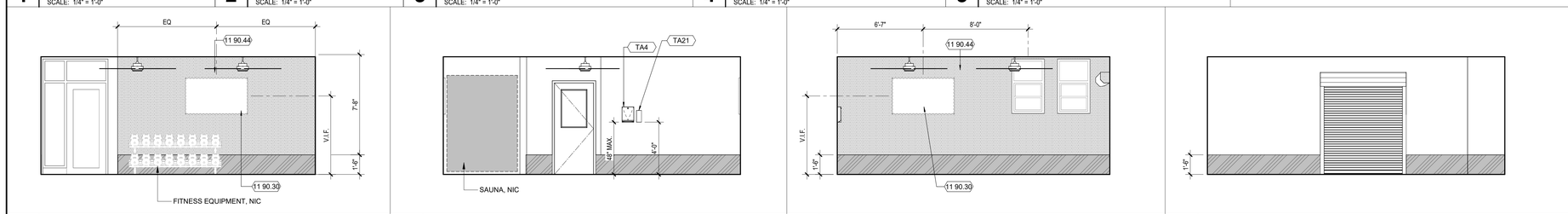

6 106 FITNESS - NORTH
SCALE: 1/4" = 1'-0"

7 106 FITNESS - EAST
SCALE: 1/4" = 1'-0"

8 106 FITNESS - SOUTH
SCALE: 1/4" = 1'-0"

9 106 FITNESS - WEST
SCALE: 1/4" = 1'-0"

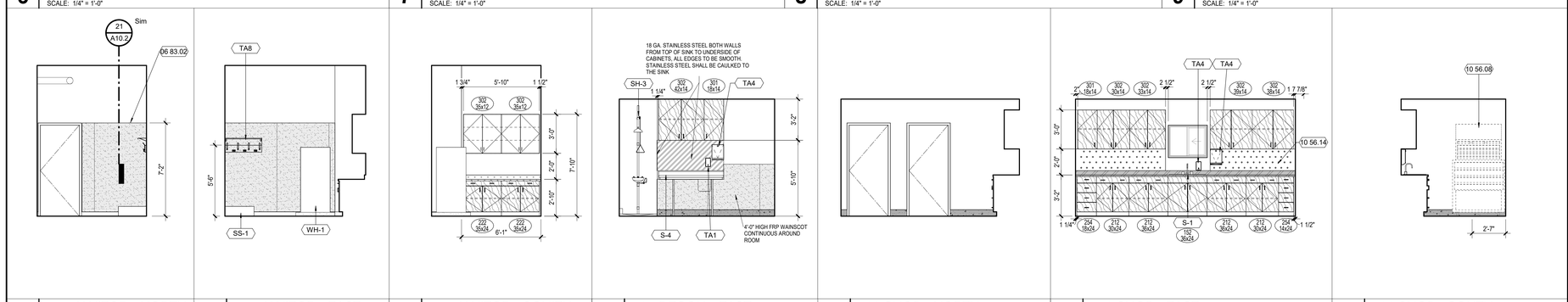

10 111 JANITOR - NORTH
SCALE: 1/4" = 1'-0"

11 111 JANITOR - EAST
SCALE: 1/4" = 1'-0"

12 111 JANITOR - SOUTH
SCALE: 1/4" = 1'-0"

13 120 DECON - EAST
SCALE: 1/4" = 1'-0"

14 122 SHOP - NORTH
SCALE: 1/4" = 1'-0"

15 122 SHOP - EAST
SCALE: 1/4" = 1'-0"

16 122 SHOP - SOUTH
SCALE: 1/4" = 1'-0"

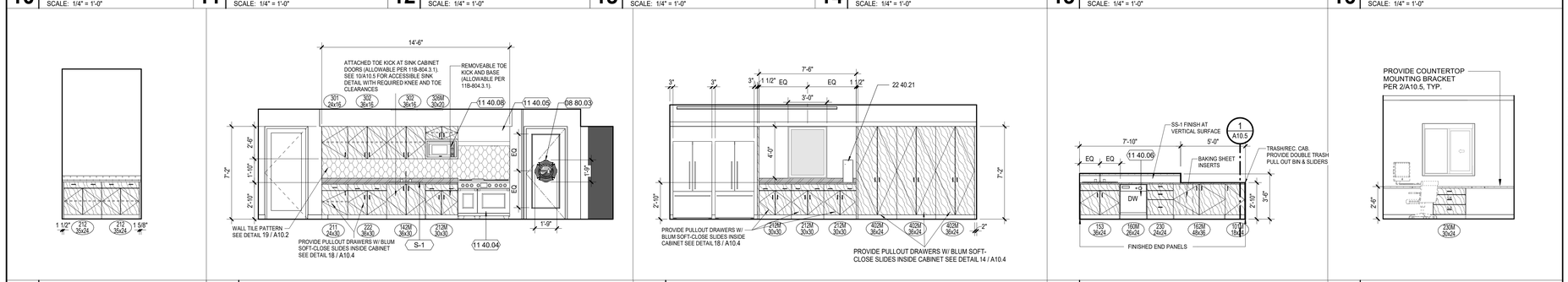

17 125 VESTIBULE - NORTH
SCALE: 1/4" = 1'-0"

18 217 KITCHEN - NORTH
SCALE: 1/4" = 1'-0"

19 217/218 KITCHEN/DINING - EAST
SCALE: 1/4" = 1'-0"

20 217/218 KITCHEN/DINING ISLAND
SCALE: 1/4" = 1'-0"

21 103 CAPT. OFFICE - SOUTH
SCALE: 1/4" = 1'-0"

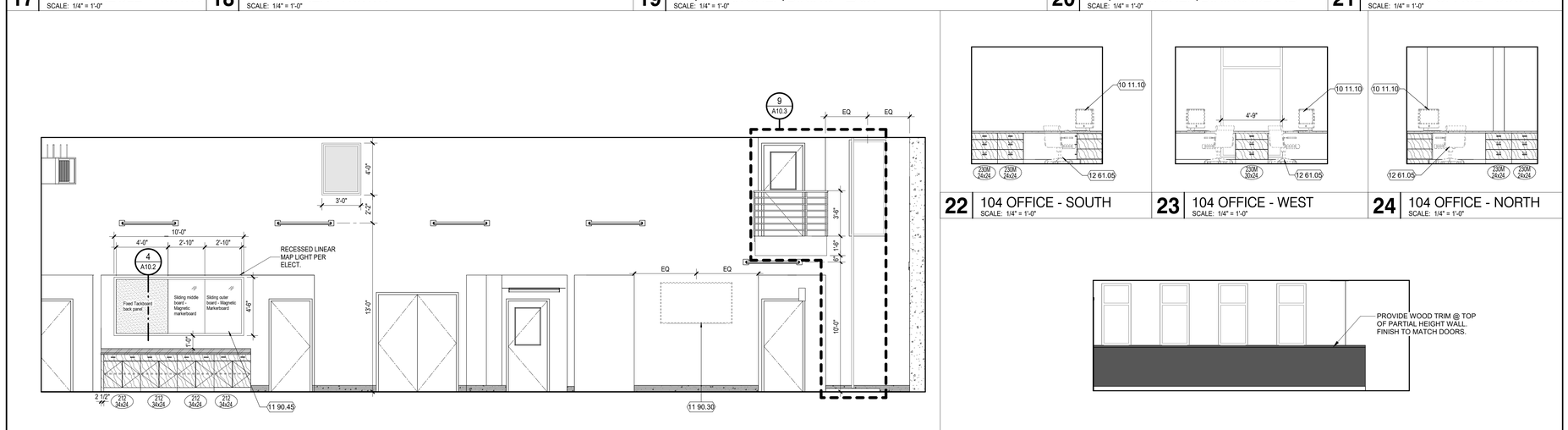

25 118 APPARATUS BAY
SCALE: 1/4" = 1'-0"

26 213 BACK STAIRS
SCALE: 1/4" = 1'-0"

22 104 OFFICE - SOUTH
SCALE: 1/4" = 1'-0"

23 104 OFFICE - WEST
SCALE: 1/4" = 1'-0"

24 104 OFFICE - NORTH
SCALE: 1/4" = 1'-0"

GENERAL NOTES

1. PROVIDE SOLID BACKING IN WALL AT ALL LOCATIONS OF WALL MOUNTED ITEMS, INCLUDING BUT NOT LIMITED TO CABINETRY, TOILET ACCESSORIES, OWNER PROVIDED ACCESSORIS, ELECTRICAL AND FIRE ALARM DEVICES, AND BRACKETS FOR WALL MOUNTED EQUIPMENT.
2. REFER TO SHEET 01/G0.30 FOR ACCESSORY MOUNTING HEIGHTS.
3. REFER TO ROOM FINISH SCHEDULE ON SHEET A7.02-2 FOR ADDITIONAL FINISH INFO.

INTERIOR MATERIALS LEGEND

- P-1 GYPSUM BOARD RE: SEE FINISH SCHEDULE
- P-2 GYPSUM BOARD - PAINTED RE: SEE FINISH SCHEDULE
- P-4 GYPSUM BOARD- PAINTED RE: SEE FINISH SCHEDULE
- PT-1 PORCELAIN TILE RE: SEE FINISH SCHEDULE SEE DETAIL 23 / A10.2
- PT-2 PORCELAIN TILE RE: SEE FINISH SCHEDULE SEE DETAILS 19 / A10.2 & 23 / A10.2
- CT-1 CERAMIC TILE RE: SEE FINISH SCHEDULE SEE DETAILS 19 / A10.2 & 23 / A10.2
- FRP-1 FIBERGLASS REIN. PANELS RE: SEE FINISH SCHEDULE SEE DETAILS 21 / A10.2 & 16 / A10.2
- RB-1 4" RUBBER BASE RE: SEE FINISH SCHEDULE AND MATERIAL SCHEDULE SEE DETAIL 5 / A10.2
- RB-2 18" RUBBER BASE RE: SEE FINISH SCHEDULE AND MATERIAL SCHEDULE SEE DETAIL 24 / A10.2
- CB 6" CONCRETE BASE WITH 3/4" RADIUS COVE RE: SEE SPECS SEE DETAIL 7 / A10.2
- TB-1 TILE BASE RE: SEE FINISH SCHEDULE AND MATERIAL SCHEDULE SEE DETAIL 23 / A10.2
- PEGBOARD RE: SEE SPECS
- MIRROR RE: SEE SPECS
- PL-1 PLASTIC LAMINATE RE: SEE FINISH SCHEDULE
- PL-2 PLASTIC LAMINATE RE: SEE FINISH SCHEDULE
- STAINLESS STEEL BACKSPLASH RE: SEE SPECS
- SS-1 SOLID SURFACE W/4" H INTEGRAL BACKSPLASH RE: SEE FINISH SCHEDULE SEE DETAIL 15 / A10.4
- SS-2 SOLID SURFACE RE: SEE FINISH SCHEDULE SEE DETAIL 15 / A10.4
- MC-1 STAIN. STEEL COUNTER W/4" H INTEGRAL BACKSPLASH RE: SEE FINISH SCHEDULE SEE DETAIL 15 / A10.4
- 100 32x12 LOCK — WOODWORK INSTITUTE CABINET REFERENCE *WIDTH x DEPTH*

INTERIOR NOTES:

1. REFER TO FINISH SCHEDULE FOR ALL FINISHES NOT SHOWN IN ELEVATIONS.
2. REFER TO FINISH LEGEND FOR FINISH MATERIAL DEFINITIONS.
3. PAINT ALL EXPOSED STRUCTURAL MEMBERS, STRUCTURAL DECK, DUCTWORK, DIFFUSERS, PIPING, CONDUIT, EQUIPMENT HOUSINGS, LIGHT FIXTURE HOUSINGS, CABLE SUPPORTS, CABLE TRAYS, EQUIPMENT SUPPORTS, HANGER, ETC. TO MATCH ADJACENT SURFACES.
4. PROVIDE SOLID BACKING IN WALL AT ALL LOCATIONS OF WALL MOUNTED ITEMS INCLUDING BUT NOT LIMITED TO CABINETRY, TOILET ACCESSORIES, OWNER PROVIDED ACCESSORIES, ELECTRICAL AND FIRE ALARM DEVICES AND BRACKETS FOR WALL MOUNTED EQUIPMENT. SEE DETAIL 14 / A10.2
5. ALL ELECTRICAL AND DATA DEVICE COVERS TO BE WHITE U.N.O.
6. PROVIDE AND INSTALL RESILIENT BASE (RB-1) AT ALL WALLS EXCEPT AS NOTED.
7. REFER TO ACCESSIBILITY GUIDELINES (G0.30) FOR MOUNTING HEIGHTS EXCEPT AS NOTED.
8. REFER TO CODE REVIEW PLANS (G0.6-G0.7) AND SIGNAGE DETAILS (G0.31) FOR SIGNAGE LOCATION, TYPES, AND INSTALLATION.
9. FOR ROOM IDENTIFICATION AND GENERAL SIGNAGES. SEE SHEETS G0.06 AND G0.07.

KEYNOTES

06 83.02	FIBERGLASS REINFORCED PANELING (FRP)
08 80.03	ETCHED GLASS COASTSIDE MEDALLION IN FROSTED GLASS
10 11.01B	MARKERBOARD - TYPE B (6'x4'), PROVIDE BACKING
10 11.06	DIGITAL MARKERBOARD, N.I.C, PROVIDE BLOCKING/WALL MOUNT
10 11.10	COMPUTER, N.I.C.
10 14.18	FIRE STATION MEDALLION SIGNAGE
10 56.08	TOOL CHEST, N.I.C.
10 56.14	PEG BOARD, CUT TO SIZE, SEE SPECS
11 40.04	GAS RANGE, SEE SPECS AND PLUMBING DWGS.
11 40.05	RANGE HOOD, SEE SPECS AND PLUMBING DWGS.
11 40.06	DISHWASHER, SEE SPECS
11 40.07	UNDERCOUNTER REFRIGERATOR, SEE SPECS
11 40.08	BUILT-IN MICROWAVE, SEE SPECS
11 90.30	TELEVISION, N.I.C, PROVIDE BLOCKING/WALL MOUNT, SEE DETAIL 14/A10.2
11 90.44	WALL MIRROR UP TO 8'-0" PROVIDE MIRRORED OUTLET COVERS, SEE SPECS
11 90.45	SLIDING UNIT DISTRICIT MAP, SEE SPECS, V.I.F. LOCATION, PROVIDE BACKING
12 35.09	DISPLAY CASE,SEE ELEVATIONS AND CASEWORK SCHEDULE
12 61.05	OFFICE CHAIR, N.I.C.
12 61.06	LOBBY CHAIR, N.I.C.
22 40.21	PLUMBED COFFEE MAKER, ADD COUNTERTOP GROMMET, SEE PLUMBING DWGS.
S-1	KITCHEN SINK, SEE PLUMBING DWGS.
S-3	SINK, SEE PLUMBING DWGS.
S-4	DECON. SINK, SEE PLUMBING DWGS.
SH-3	SHOWER, DECON., SEE PLUMBING DWGS.
SS-1	SERVICE SINK, SEE PLUMBING DWGS.
WH-1	WATER HEATER ON CONCRETE PAD PER PLUMB.

RESTROOM ACCESSORY LEGEND

TA1	SOAP DISPENSER
TA2	MIRROR, SEE ELEVATIONS FOR SIZE
TA3	TOILET PAPER DISPENSER
TA4	PAPER TOWEL DISPENSER
TA5	GRAB BARS AT TYPICAL ACCESSIBLE TOILET STALLS
TA7	SANITARY NAPKIN DISPOSAL
TA8	MOP AND BROOM HOLDER
TA9	GRAB BARS AT ACCESSIBLE SHOWER
TA10	FOLDING SHOWER BENCH
TA11	CLOTHES HOOK
TA12	SHOWER CURTAIN, ROD AND HOOKS
TA14	COMBO PAPER TOWEL DISPENSER/TRASH RECEPTACLE
TA17	TRASH RECEPTACLE
TA18	TOILET PAPER DISPENSER WITH SANITARY NAPKIN DISPOSAL, RECESSED
TA19	TOILET SEAT COVER DISPENSER
TA21	SURFACE MOUNTED HAND SANTIZER DISPENSER
TA-4	

PBK
ARCHITECT PBK Architects, Inc.
PBK.com
SAN LUIS OBISPO
408 Higuera Street, Ste 100
San Luis Obispo, CA 93401
805-329-3076

FIRE STATION #44
COASTSIDE FIRE PROTECTION DISTRICT

501 STETSON STREET
MOSS BEACH, CA 94038
PLAN CHECK 02 RESPONSE

BID SET

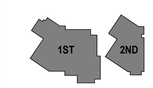

KEY PLAN
PLAN NORTH
TRUE NORTH

CLIENT
COASTSIDE FIRE PROTECTION DISTRICT
PROJECT NUMBER
230137
DATE 03/13/2026
DRAWN BY: KF/OS CHKED BY: AD
REVISIONS

#	DESCRIPTION	DATE

This document is for plan review only

INTERIOR ELEVATIONS

A7.1

5/29/2026 4:37:32 PM

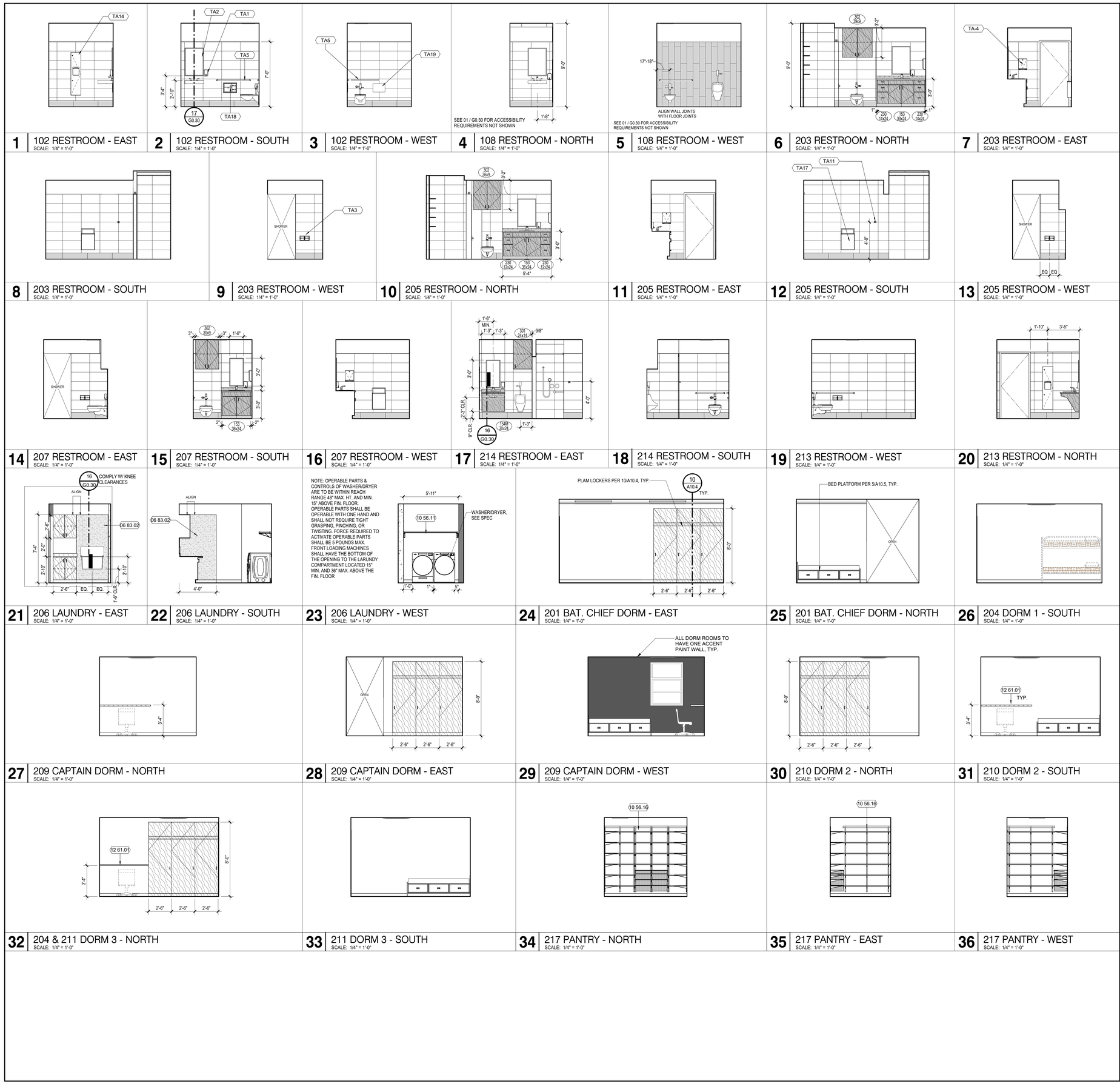

1 102 RESTROOM - EAST SCALE: 1/4" = 1'-0"
2 102 RESTROOM - SOUTH SCALE: 1/4" = 1'-0"
3 102 RESTROOM - WEST SCALE: 1/4" = 1'-0"
4 108 RESTROOM - NORTH SCALE: 1/4" = 1'-0"
5 108 RESTROOM - WEST SCALE: 1/4" = 1'-0"
6 203 RESTROOM - NORTH SCALE: 1/4" = 1'-0"
7 203 RESTROOM - EAST SCALE: 1/4" = 1'-0"
8 203 RESTROOM - SOUTH SCALE: 1/4" = 1'-0"
9 203 RESTROOM - WEST SCALE: 1/4" = 1'-0"
10 205 RESTROOM - NORTH SCALE: 1/4" = 1'-0"
11 205 RESTROOM - EAST SCALE: 1/4" = 1'-0"
12 205 RESTROOM - SOUTH SCALE: 1/4" = 1'-0"
13 205 RESTROOM - WEST SCALE: 1/4" = 1'-0"
14 207 RESTROOM - EAST SCALE: 1/4" = 1'-0"
15 207 RESTROOM - SOUTH SCALE: 1/4" = 1'-0"
16 207 RESTROOM - WEST SCALE: 1/4" = 1'-0"
17 214 RESTROOM - EAST SCALE: 1/4" = 1'-0"
18 214 RESTROOM - SOUTH SCALE: 1/4" = 1'-0"
19 213 RESTROOM - WEST SCALE: 1/4" = 1'-0"
20 213 RESTROOM - NORTH SCALE: 1/4" = 1'-0"
21 206 LAUNDRY - EAST SCALE: 1/4" = 1'-0"
22 206 LAUNDRY - SOUTH SCALE: 1/4" = 1'-0"
23 206 LAUNDRY - WEST SCALE: 1/4" = 1'-0"
24 201 BAT. CHIEF DORM - EAST SCALE: 1/4" = 1'-0"
25 201 BAT. CHIEF DORM - NORTH SCALE: 1/4" = 1'-0"
26 204 DORM 1 - SOUTH SCALE: 1/4" = 1'-0"
27 209 CAPTAIN DORM - NORTH SCALE: 1/4" = 1'-0"
28 209 CAPTAIN DORM - EAST SCALE: 1/4" = 1'-0"
29 209 CAPTAIN DORM - WEST SCALE: 1/4" = 1'-0"
30 210 DORM 2 - NORTH SCALE: 1/4" = 1'-0"
31 210 DORM 2 - SOUTH SCALE: 1/4" = 1'-0"
32 204 & 211 DORM 3 - NORTH SCALE: 1/4" = 1'-0"
33 211 DORM 3 - SOUTH SCALE: 1/4" = 1'-0"
34 217 PANTRY - NORTH SCALE: 1/4" = 1'-0"
35 217 PANTRY - EAST SCALE: 1/4" = 1'-0"
36 217 PANTRY - WEST SCALE: 1/4" = 1'-0"

GENERAL NOTES

1. PROVIDE SOLID BACKING IN WALL AT ALL LOCATIONS OF WALL MOUNTED ITEMS, INCLUDING BUT NOT LIMITED TO CABINETRY, TOILET ACCESSORIES, OWNER PROVIDED ACCESSORIS, ELECTRICAL AND FIRE ALARM DEVICES, AND BRACKETS FOR WALL MOUNTED EQUIPMENT.
2. REFER TO SHEET 01/G0.30 FOR ACCESSORY MOUNTING HEIGHTS.
3. REFER TO ROOM FINISH SCHEDULE ON SHEET A7.02-2 FOR ADDITIONAL FINISH INFO.

INTERIOR MATERIALS LEGEND

- P-1 GYPSUM BOARD RE: SEE FINISH SCHEDULE
- P-2 GYPSUM BOARD - PAINTED RE: SEE FINISH SCHEDULE
- P-4 GYPSUM BOARD- PAINTED RE: SEE FINISH SCHEDULE
- PT-1 PORCELAIN TILE RE: SEE FINISH SCHEDULE SEE DETAIL 23 / A10.2
- PT-2 PORCELAIN TILE RE: SEE FINISH SCHEDULE SEE DETAILS 19 / A10.2 & 23 / A10.2
- CT-1 CERAMIC TILE RE: SEE FINISH SCHEDULE SEE DETAILS 19 / A10.2 & 23 / A10.2
- FRP-1 FIBERGLASS REIN. PANELS RE: SEE FINISH SCHEDULE SEE DETAILS 21 / A10.2 & 16 / A10.2
- RB-1 4" RUBBER BASE RE: SEE FINISH SCHEDULE AND MATERIAL SCHEDULE SEE DETAIL 5 / A10.2
- RB-2 18" RUBBER BASE RE: SEE FINISH SCHEDULE AND MATERIAL SCHEDULE SEE DETAIL 24 / A10.2
- CB 6" CONCRETE BASE WITH 3/4" RADIUS COVE RE: SEE SPECS SEE DETAIL 7 / A10.2
- TB-1 TILE BASE RE: SEE FINISH SCHEDULE AND MATERIAL SCHEDULE SEE DETAIL 23 / A10.2
- PEGBOARD RE: SEE SPECS
- MIRROR RE: SEE SPECS
- PL-1 PLASTIC LAMINATE RE: SEE FINISH SCHEDULE
- PL-2 PLASTIC LAMINATE RE: SEE FINISH SCHEDULE
- STAINLESS STEEL BACKSPLASH RE: SEE SPECS
- SS-1 SOLID SURFACE W/4" H INTEGRAL BACKSPLASH RE: SEE FINISH SCHEDULE SEE DETAIL 15 / A10.4
- SS-2 SOLID SURFACE RE: SEE FINISH SCHEDULE SEE DETAIL 15 / A10.4
- MC-1 STAIN. STEEL COUNTER W/4" H INTEGRAL BACKSPLASH RE: SEE FINISH SCHEDULE SEE DETAIL 15 / A10.4
- 100 12x12 Lab — WOODWORK INSTITUTE CABINET REFERENCE *WIDTH x DEPTH*

INTERIOR NOTES:

1. REFER TO FINISH SCHEDULE FOR ALL FINISHES NOT SHOWN IN ELEVATIONS.
2. REFER TO FINISH LEGEND FOR FINISH MATERIAL DEFINITIONS.
3. PAINT ALL EXPOSED STRUCTURAL MEMBERS, STRUCTURAL DECK, DUCTWORK, DIFFUSERS, PIPING, CONDUIT, EQUIPMENT HOUSINGS, LIGHT FIXTURE HOUSINGS, CABLE SUPPORTS, CABLE TRAYS, EQUIPMENT SUPPORTS, HANGER, ETC. TO MATCH ADJACENT SURFACES.
4. PROVIDE SOLID BACKING IN WALL AT ALL LOCATIONS OF WALL MOUNTED ITEMS INCLUDING BUT NOT LIMITED TO CABINETRY, TOILET ACCESSORIES, OWNER PROVIDED ACCESSORIES, ELECTRICAL AND FIRE ALARM DEVICES AND BRACKETS FOR WALL MOUNTED EQUIPMENT. SEE DETAIL 14 / A10.2
5. ALL ELECTRICAL AND DATA DEVICE COVERS TO BE WHITE U.N.O.
6. PROVIDE AND INSTALL RESILIENT BASE (RB-1) AT ALL WALLS EXCEPT AS NOTED.
7. REFER TO ACCESSIBILITY GUIDELINES (G0.30) FOR MOUNTING HEIGHTS EXCEPT AS NOTED.
8. REFER TO CODE REVIEW PLANS (G0.6-G0.7) AND SIGNAGE DETAILS (G0.31) FOR SIGNAGE LOCATION, TYPES, AND INSTALLATION.
9. FOR ROOM IDENTIFICATION AND GENERAL SIGNAGES. SEE SHEETS G0.06 AND G0.07.

RESTROOM ACCESSORY LEGEND

TA1	SOAP DISPENSER
TA2	MIRROR, SEE ELEVATIONS FOR SIZE
TA3	TOILET PAPER DISPENSER
TA4	PAPER TOWEL DISPENSER
TA5	GRAB BARS AT TYPICAL ACCESSIBLE TOILET STALLS
TA7	SANITARY NAPKIN DISPOSAL
TA8	MOP AND BROOM HOLDER
TA9	GRAB BARS AT ACCESSIBLE SHOWER
TA10	FOLDING SHOWER BENCH
TA11	CLOTHES HOOK
TA12	SHOWER CURTAIN, ROD AND HOOKS
TA14	COMBO PAPER TOWEL DISPENSER/TRASH RECEPTACLE
TA17	TRASH RECEPTACLE
TA18	TOILET PAPER DISPENSER WITH SANITARY NAPKIN DISPOSAL, RECESSED
TA19	TOILET SEAT COVER DISPENSER
TA21	SURFACE MOUNTED HAND SANTIZER DISPENSER
TA-4	

KEYNOTES

06 83.02	FIBERGLASS REINFORCED PANELING (FRP)
10 56.11	METAL WIRE UTILITY SHELVING SYSTEM, SEE ELEVATIONS AND SPECS
10 56.16	CLOSETMAID METAL MESH PANTRY SYSTEM OR APPROVED EQUAL. INSTALL AS SHOWN IN ELEVATIONS AND PER MANUF. STD. PROVIDE BLOCKING AS REQUIRED., SEE SPECS
12 61.01	DESK AND CHAIRS, N.I.C.

PBK
ARCHITECT PBK Architects, Inc.
PBK.com
SAN LUIS OBISPO
408 Higuera Street, Ste 100
San Luis Obispo, CA 93401
805-329-3076

FIRE STATION #44
COASTSIDE FIRE PROTECTION DISTRICT

501 STETSON STREET
MOSS BEACH, CA 94038
PLAN CHECK 02 RESPONSE

BID SET

KEY PLAN
1ST 2ND
PLAN NORTH TRUE NORTH

CLIENT
COASTSIDE FIRE PROTECTION DISTRICT
PROJECT NUMBER
230137
DATE 03/13/2026
DRAWN BY: KF/OS CHKED BY: AD
REVISIONS

#	DESCRIPTION	DATE

This document is for plan review only

INTERIOR ELEVATIONS

A7.2

5/29/2026 4:37:41 PM

A7.3 - WALL SECTIONS

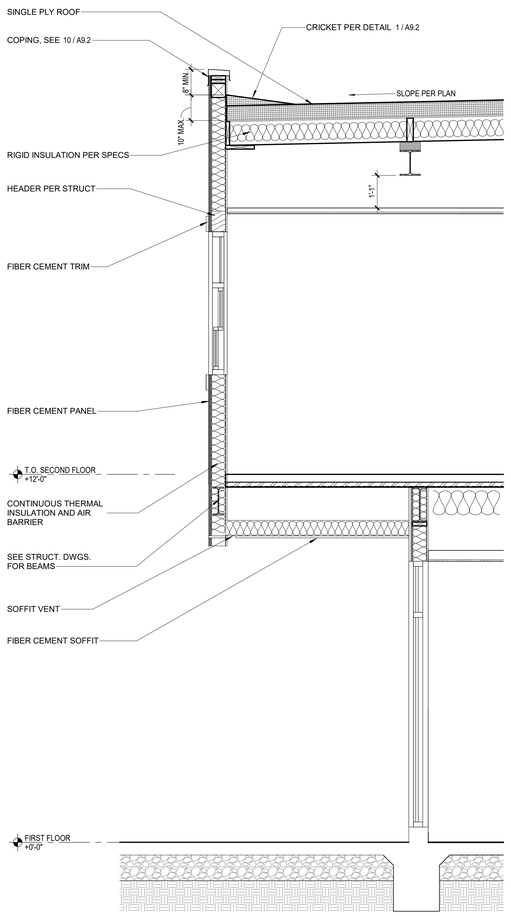

5 SECTION AT ENTRY
SCALE: 1/2" = 1'-0"

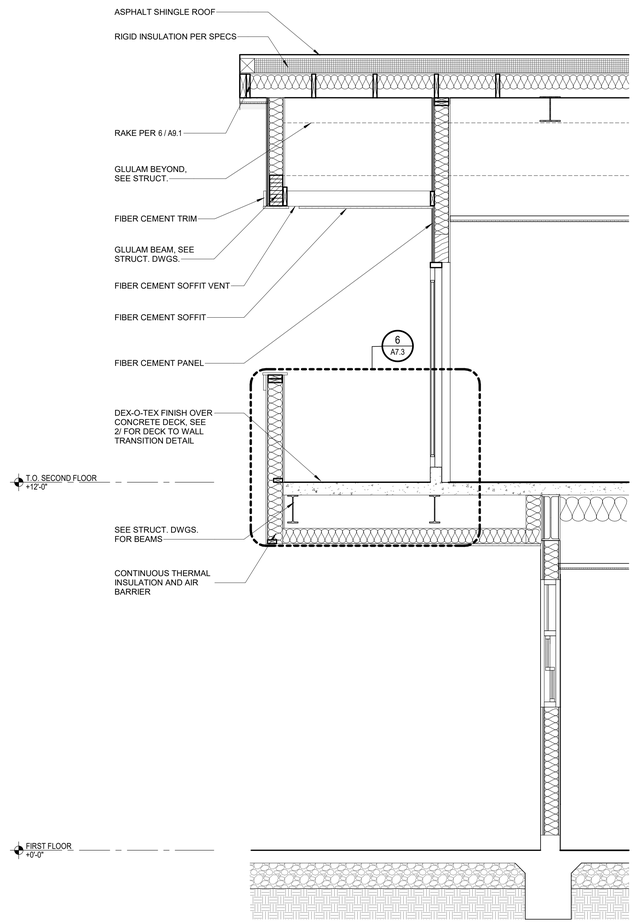

4 SECTION AT BALCONY
SCALE: 1/2" = 1'-0"

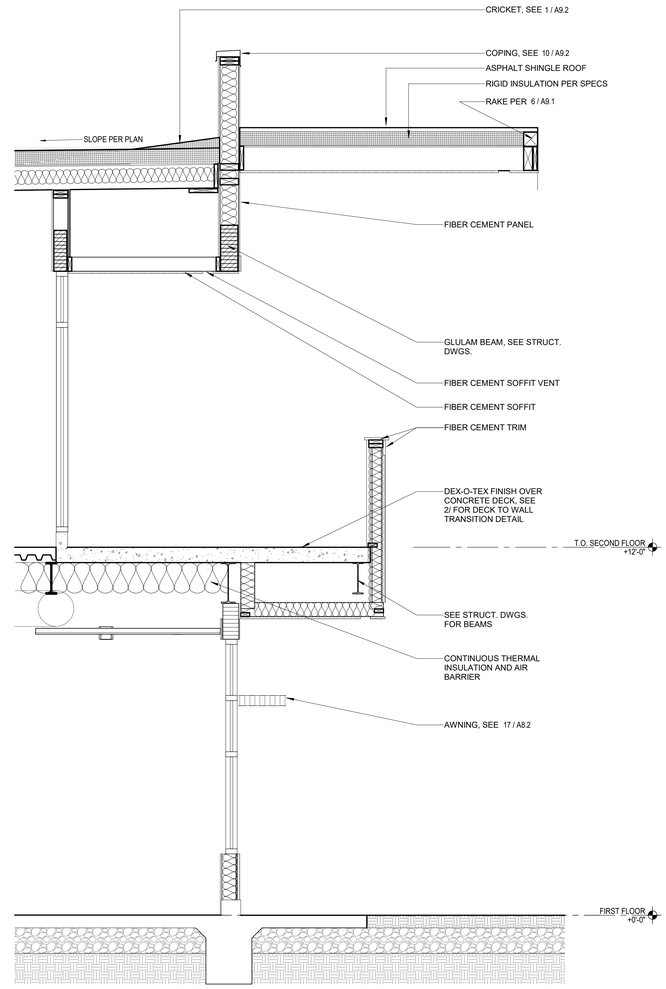

1 SECTION AT DECK
SCALE: 1/2" = 1'-0"

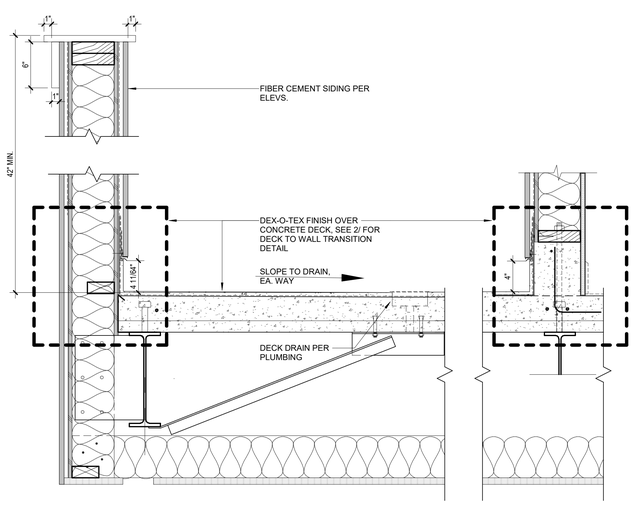

6 SECTION AT BALCONY - Callout 1
SCALE: 1 1/2" = 1'-0"

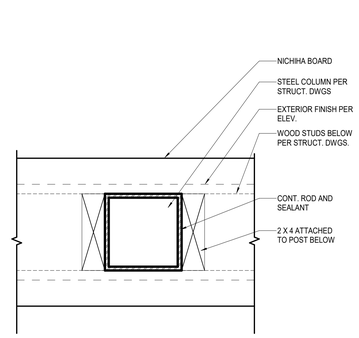

3 COLUMN AT DECK
SCALE: 3" = 1'-0"

NOTE: PROVIDE PERIMETER TO DECK EDGE TRANSITIONAL FLASHING (DEX-O-TEX DETAIL W3H) AT WALL OPENINGS.

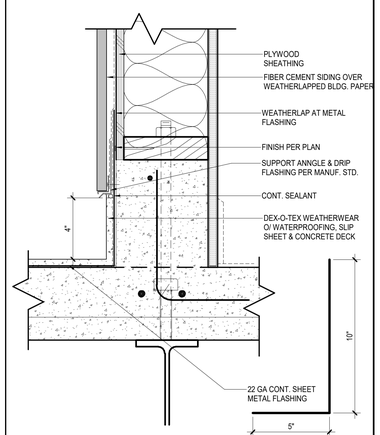

2 DECK TO LOW WALL DETAIL
SCALE: 3" = 1'-0"

PBK

ARCHITECT PBK Architects, Inc.
PBK.com
SAN LUIS OBISPO
408 Higuera Street, Ste 100
San Luis Obispo, CA 93401
805-329-3076

FIRE STATION #44
COASTSIDE FIRE PROTECTION DISTRICT

501 STETSON STREET
MOSS BEACH, CA 94038
PLAN CHECK 02 RESPONSE

BID SET

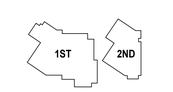

KEY PLAN

PLAN NORTH TRUE NORTH

CLIENT
COASTSIDE FIRE PROTECTION DISTRICT
PROJECT NUMBER
230137
DATE 03/13/2026
DRAWN BY: KF/OS CHKED BY: AD
REVISIONS

#	DESCRIPTION	DATE

This document is for plan review only

WALL SECTIONS

A7.3

5/29/2026 4:37:43 PM

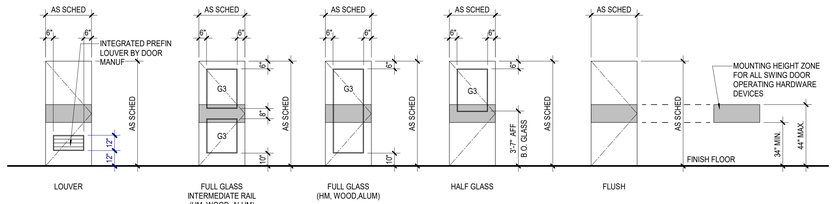

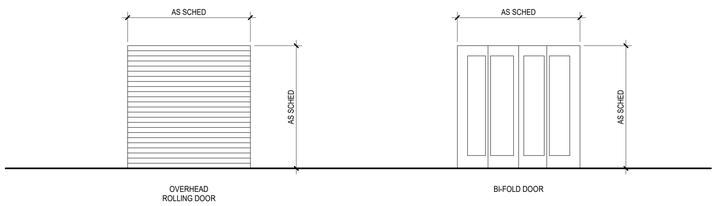

DOOR PANEL ELEVATION TYPES
SCALE: 1/4" = 1'-0"

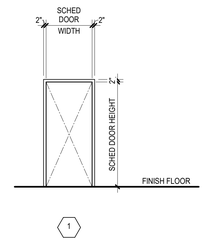

DOOR FRAME ELEVATION TYPES
SCALE: 1/4" = 1'-0"

DOOR SCHEDULE

MARK	DOOR PANEL OPENING PAIR/ SING	SIZE W x H W	H	ELEV.	MATL.	DOOR FRAME ELEV.	MATL.	DETAILS HEAD	JAMB	THRESHOLD	H.W.	FIRE RATING LABEL	REMARKS
101A	SING	3'-0"	7'-0"	FG	ALUM		ALUM	18 / A8.2	19 / A8.2	15 / A8.2	1.0		CARD READER, PANIC/PUSH
101B	SING	3'-0"	7'-0"	F	HM	1	HM	3 / A8.3	4 / A8.3	5 / A8.3	17.0		CARD READER
102A	SING	3'-0"	7'-0"	F	WS	1	HM	3 / A8.3	4 / A8.3	5 / A8.3	18.0		
103A	SING	3'-0"	7'-0"	HG	HM	1	HM	3 / A8.3	4 / A8.3	5 / A8.3	15.0		
106A	SING	3'-0"	7'-0"	HG	HM	1	HM	3 / A8.3	4 / A8.3	5 / A8.3	19.0		
106B	SING	3'-0"	7'-0"	FG	ALUM		ALUM	2 / A8.2	19 / A8.2	15 / A8.2	1.0		CARD READER, PANIC/PUSH
106C	SING	6'-0"	7'-0"	ORD	STL		STL	28 / A8.3	25 / A8.3	15 / A8.2			
107A	SING	3'-0"	7'-0"	HG	HM	1	HM	2 / A8.2	3 & 4 / A8.2	5 / A8.2	2.0		CARD READER, PANIC/PUSH
108A	SING	3'-0"	7'-0"	F	WS	1	HM	3 / A8.3	4 / A8.3	5 / A8.3	18.0		
109A	SING	3'-0"	7'-0"	F	HM	1	HM	2 / A8.2	3 & 4 / A8.2	5 / A8.2	2.0		PANIC/PUSH
110A	SING	3'-0"	7'-0"	F	HM	1	HM	3 / A8.3	4 / A8.3	5 / A8.3	4.0		
110B	SING	3'-0"	7'-0"	HG	HM	1	HM	3 / A8.3	4 / A8.3	5 / A8.3	4.0		
111A	SING	3'-0"	7'-0"	F	WS	1	HM	3 / A8.3	4 / A8.3	5 / A8.3	11.0		
112A	SING	3'-0"	7'-0"	F	WS	1	HM	3 / A8.3	4 / A8.3	5 / A8.3	14.0		
113A	SING	3'-0"	7'-0"	F	WS	1	HM	3 / A8.3	4 / A8.3	5 / A8.3	11.0		
114A	SING	3'-0"	7'-0"	F	WS	1	HM	3 / A8.3	4 / A8.3	5 / A8.3	13.0		
115A	SING	3'-0"	7'-0"	FG	ALUM		ALUM	8 / A8.3	9 / A8.3	20 / A8.3	16.0		CARD READER
115B	SING	3'-0"	7'-0"	F	HM	1	HM	3 / A8.3	4 / A8.3	5 / A8.3	6.0		
116A	SING	3'-0"	7'-0"	F	HM	1	HM	2 / A8.2	3 & 4 / A8.2	5 / A8.2	2.0		PANIC/PUSH
116B	SING	3'-0"	7'-0"	HG	HM	1	HM	2 / A8.2	3 & 4 / A8.2	5 / A8.2	4.0		CARD READER
116C	PAIR	6'-0"	7'-6"	F	HM	1	HM	3 / A8.3	4 / A8.3	5 / A8.3	5.0		
116D	SING	28'-0"	14'-0"	ORD	STL		STL	28 / A8.3	25 / A8.3	15 / A8.2			
116E	PAIR	14'-0"	14'-0"	BIF	STL		STL	19 / A8.3	19 / A8.3	19 / A8.3			
116F	PAIR	14'-0"	14'-0"	BIF	STL		STL	19 / A8.3	19 / A8.3	19 / A8.3			
117A	SING	6'-0"	7'-0"	ORD	STL		STL	28 / A8.3	25 / A8.3	15 / A8.2			
118A	SING	3'-0"	7'-0"	F	HM	1	HM	3 / A8.3	4 / A8.3	5 / A8.3	7.0		
119A	SING	3'-0"	7'-0"	F	HM	1	HM	3 / A8.3	4 / A8.3	5 / A8.3	3.0		
120A	SING	3'-0"	7'-0"	F	HM	1	HM	3 / A8.3	4 / A8.3	5 / A8.3	10.0		
121A	SING	3'-0"	7'-0"	F	HM	1	HM	3 / A8.3	4 / A8.3	5 / A8.3	8.0		
122A	SING	3'-0"	7'-0"	F	HM	1	HM	3 / A8.3	4 / A8.3	5 / A8.3	3.0		
124A	SING	3'-0"	7'-0"	F	HM	1	HM	2 / A8.2	3 & 4 / A8.2	5 / A8.2	4.0		
201A	SING	3'-0"	7'-0"	F	WS	1	HM	3 / A8.3	4 / A8.3	5 / A8.3	22.0	1 HR	
201B	SING	3'-0"	7'-0"	FG	WS	1	HM	2 / A8.2	4 / A8.2	5 / A8.2	23.0		
203A	SING	3'-0"	7'-0"	F	WS	1	HM	3 / A8.3	4 / A8.3	5 / A8.3	24.0		
204A	SING	3'-0"	7'-0"	F	WS	1	HM	3 / A8.3	4 / A8.3	5 / A8.3	24.0	1 HR	
205A	SING	3'-0"	7'-0"	F	WS	1	HM	3 / A8.3	4 / A8.3	5 / A8.3	18.0		
207A	SING	3'-0"	7'-0"	F	WS	1	HM	3 / A8.3	4 / A8.3	5 / A8.3	24.0		
209A	SING	3'-0"	7'-0"	F	WS	1	HM	3 / A8.3	4 / A8.3	5 / A8.3	22.0	1 HR	
209B	SING	3'-0"	7'-0"	FG	WS	1	HM	2 / A8.2	4 / A8.2	5 / A8.2	23.0		
209C	SING	3'-0"	7'-0"	F	WS	1	HM	3 / A8.3	4 / A8.3	5 / A8.3	25.0		
210A	SING	3'-0"	7'-0"	F	WS	1	HM	3 / A8.3	4 / A8.3	5 / A8.3	22.0	1 HR	
211A	SING	3'-0"	7'-0"	F	WS	1	HM	3 / A8.3	4 / A8.3	5 / A8.3	22.0	1 HR	
212A	SING	3'-0"	7'-0"	F	WS	1	HM	3 / A8.3	4 / A8.3	5 / A8.3	20.0		
213A	SING	3'-0"	7'-0"	HG	HM	1	HM	3 / A8.3	4 / A8.3	5 / A8.3	21.0		
214A	SING	3'-0"	7'-0"	F	WS	1	HM	3 / A8.3	4 / A8.3	5 / A8.3	18.0		
215A	SING	3'-0"	7'-0"	F	WS	1	HM	3 / A8.3	4 / A8.3	5 / A8.3	12.0		
216A	SING	3'-0"	7'-0"	F	WS	1	HM	3 / A8.3	4 / A8.3	5 / A8.3	11.0		
217A	SING	3'-0"	7'-0"	F	HM	1	HM	3 / A8.3	4 / A8.3	5 / A8.3	12.0		
218A	SING	3'-0"	7'-0"					3 / A8.3	4 / A8.3	5 / A8.3	19.0		
221A	SING	3'-0"	7'-0"	FG	WS	1	HM	3 / A8.2	4 / A8.2	5 / A8.2	9.0		

DOOR SCHEDULE REMARKS

A. PANIC EXIT HARDWARE
B. NOT AN ENTRY DOOR, EXIT ONLY DOOR WITH LOCKING OPERABLE HARDWARE ON SWING-OUT SIDE OF DOOR
C. NO LOCKING HARDWARE
D. ELEC. DOOR OPENER
E. ELEC. CONTROLLED ACCESS HARDWARE WITH CARD READER
F. ELEC. CONTROLLED ACCESS HARDWARE WITH PUSH-BUTTON
G. ELEC. CONTROLLED ACCESS HARDWARE, ROUGH-IN ONLY
H. KEYED REMOVABLE CENTER MULLION
I. CENTER ASTRAGAL
J. 180 DEGREE SWING
K. CONT. HINGE
L. WEATHER-STRIP SEAL
M. FIRE SMOKE SEAL
N. SOUND SEAL
O. PEEP HOLE
P. DOOR BUZZER
Q. DOOR CHIME ON OPEN
R. MANUAL HOLD-OPEN
S. MAGNETIC HOLD-OPEN, CONNECT TO FIRE ALARM
T. MAGNETIC HOLD-OPEN, CONNECT TO SECURITY SYSTEM
U. INSULATED DOOR
V. SOUND RATED DOOR ASSEMBLY, STC AS SPECIFIED
W. WINDSTORM DOOR HARDWARE SHALL BE TESTED AS PART OF A COMPLETE DOOR OPENING ASSEMLBY. THE TESTED DOOR OPENING ASSEMBLY SHALL INCLUDE DOOR HARDWARE. THE ENTIRE DOOR OPENING, INCLUDING DOOR HARDWARE, SHALL BE BY DOOR MANUF.
X. ACOUSTICAL GLASS TO MEET FIRE DOOR ASSEMBLY REQUIREMENTS FOR FIRE RATING INDICATED
Y. MANUAL PUSH-UP OPERATION
Z. ELEC MOTOR OPERATION WITH KEY SWITCH CONTROL, KEY SWITCH ON ONE SIDE OF DOOR ONLY
AA. ELEC MOTOR OPERATION WITH KEY SWITCH CONTROL, KEY SWITCH ON BOTH SIDES OF DOOR
BB. ELEC MOTOR OPERATION WITH PUSH-BUTTON CONTROL ON ONE SIDE OF DOOR ONLY
CC. PANIC EXIT PUSH-BUTTON ON ONE SIDE OF DOOR ONLY
DD. AUTOMATIC OPEN ON FIRE ALARM ACTIVATION
EE. AUTOMATIC CLOSE ON FIRE ALARM ACTIVATION
FF. FAIL SAFE IN OPEN POSITION
GG. FAIL SAFE IN CLOSED POSITION
HH. MAXIMUM OCCUPANCY SIGNAGE NEAR DOOR
II. SIGNAGE ON DOOR TO READ "NOT AN EXIT"

DOOR GENERAL NOTES

A. THE FLOOR OR LANDING SHALL NOT BE MORE THAN 1/2 INCH LOWER THAN THE THRESHOLD OF THE DOORWAY. CHANGE IN LEVEL BETWEEN 1/4 INCH AND 1/2 INCH SHALL BE BEVELED WITH A SLOPE NO GREATER THAN ONE UNIT VERTICAL TO 2 UNITS HORIZONTAL.

B. MAXIMUM OPERATING FORCE SHALL BE 5 POUNDS.

C. DOOR HARDWARE SHALL BE OPERABLE WITH ONE HAND AND DOES NOT REQUIRE TIGHT GRASPING, PINCHING, OR TWISTING OF THE WRIST TO OPERATE.

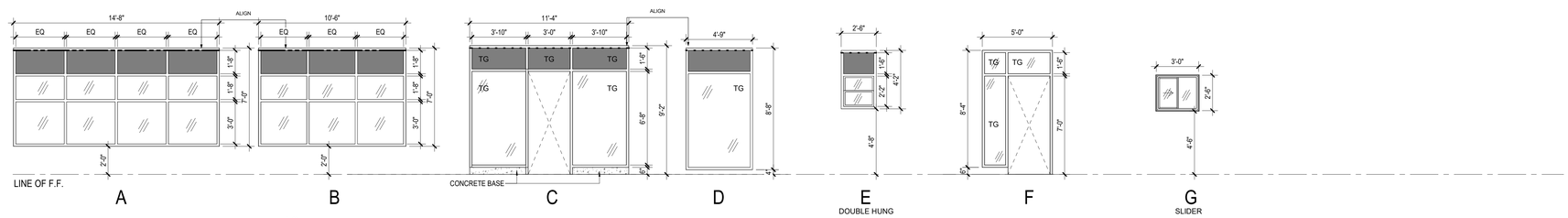

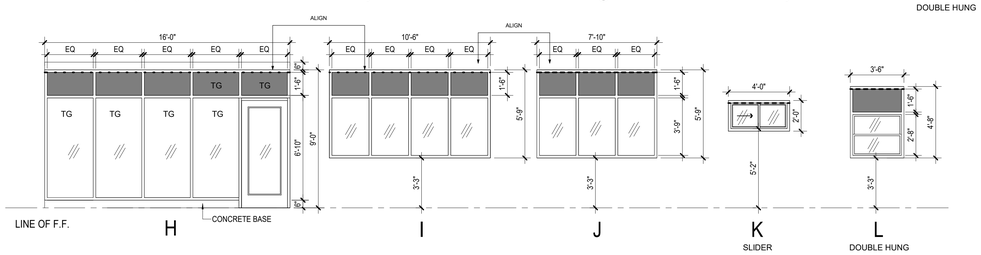

WINDOW SCHEDULE

MARK	SIZE WIDTH	HEIGHT	MATERIAL	FINISH	DETAILS HEAD	JAMB	SILL	GLAZING THICKNESS	TYPE	FIRE RATING HR	COMMENTS
A	14'-8"	7'-0"	ALUM	PF	17 & 18 / A8.2	19 / A8.2	20 / A8.2	1"	GL1, SP		SEE WINDOW TYPES
B	10'-6"	7'-0"	ALUM	PF	17 & 18 / A8.2	19 / A8.2	20 / A8.2	1"	GL1, SP		SEE WINDOW TYPES
C	11'-4"	9'-2"	ALUM	PF	18 / A8.2	19 / A8.2	10 / A8.2	1"	GL1, SP		SEE WINDOW TYPES
D	4'-9"	8'-8"	ALUM	PF	18 / A8.2	19 / A8.2	10 / A8.2	1"	GL1, SP		SEE WINDOW TYPES
E	2'-6"	1'-8"	ALUM	PF	18 / A8.2	19 / A8.2	20 / A8.2	1"	GL1, SP		SEE WINDOW TYPES
F	5'-0"	8'-10"	ALUM	PF	18 / A8.2	19 / A8.2	20 / A8.2	1"	GL1		SEE WINDOW TYPES
G	3'-0"	2'-6"	ALUM	PF	7 / A8.2	8 / A8.2	9 / A8.2	1"	GL1		SEE WINDOW TYPES
H	14'-6"	5'-8"	ALUM	PF	7 / A8.2	8 / A8.2	15 / A8.3	1"	GL1, SP		SEE WINDOW TYPES
I	10'-6"	5'-6"	ALUM	PF	7 / A8.2	8 / A8.2	9 / A8.2	1"	GL1, SP		SEE WINDOW TYPES
J	7'-10"	5'-6"	ALUM	PF	7 / A8.2	8 / A8.2	9 / A8.2	1"	GL1, SP		SEE WINDOW TYPES
K	4'-0"	2'-0"	ALUM	PF	7 / A8.2	8 / A8.2	9 / A8.2	1"	GL1		SEE WINDOW TYPES
L	3'-6"	3'-0"	ALUM	PF	7 / A8.2	8 / A8.2	9 / A8.2	1"	GL1, SP		SEE WINDOW TYPES
M	2'-3"	11'-0"	ALUM	PF	7 / A8.2	8 / A8.2	9 / A8.2	1"	GL1, SP		SEE WINDOW TYPES
N	2'-3"	11'-0"	ALUM	PF	7 / A8.2	8 / A8.2	9 / A8.2	1"	GL1, SP		SEE WINDOW TYPES
O	2'-3"	11'-0"	ALUM	PF	7 / A8.2	8 / A8.2	9 / A8.2	1"	GL1, SP		SEE WINDOW TYPES
P	2'-3"	11'-0"	ALUM	PF	7 / A8.2	8 / A8.2	9 / A8.2	1"	GL1, SP		SEE WINDOW TYPES
Q	4'-0"	4'-0"	ALUM	PF	8 / A8.3	9 / A8.3	10 / A8.3	1/4"	GL2		SEE WINDOW TYPES
R	2'-10"	7'-5"	ALUM	PF	8 / A8.3	9 / A8.3	15 / A8.3	1/4"	GL2		SEE WINDOW TYPES
S	3'-0"	7'-0"	ALUM	PF	8 / A8.3	9 / A8.3	15 / A8.3	1/4"	GL2		SEE WINDOW TYPES
T	5'-6"	7'-0"	ALUM	PF	8 / A8.3	9 / A8.3	15 / A8.3	1/4"	GL2		SEE WINDOW TYPES
U	3'-0"	4'-0"	ALUM	PF	8 / A8.3	9 / A8.3	10 / A8.3	1/4"	GL2		SEE WINDOW TYPES

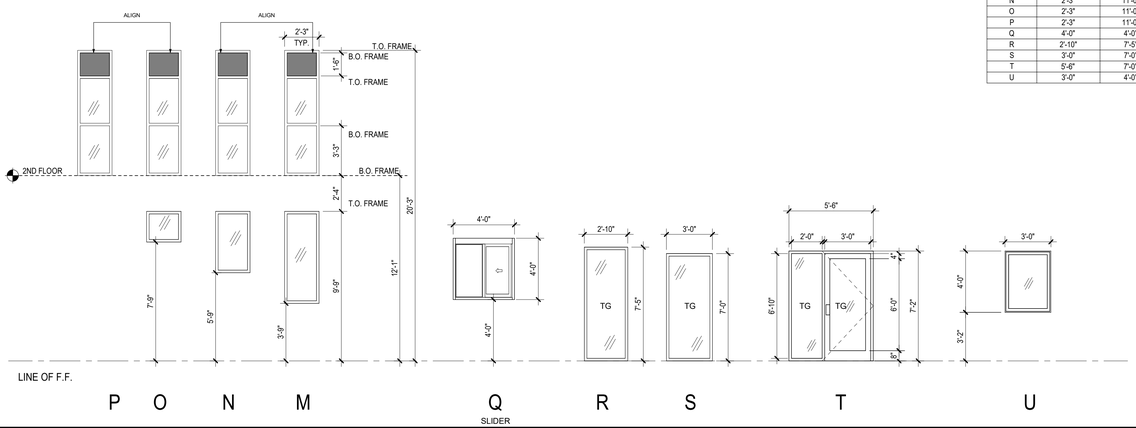

RED SPANDREL GLASS (COLOR 1), SEE SPECS

LIGHT GREY SPANDREL GLASS (COLOR 2), SEE SPECS

WS-3 MOTORIZED ROLLER WINDOW SHADE - SEE MATERIAL SCHEDULE

WS-1 MANUAL ROLLER WINDOW SHADE - SEE MATERIAL SCHEDULE

WS-2 MANUAL ROLLER WINDOW BLACK-OUT SHADE - SEE MATERIAL SCHEDULE

WINDOW LEGEND
SCALE: 1/4" = 1'-0"

WINDOW SCHED COLUMN REFERENCE GUIDE

1. SYMBOL MARK: ALPHABETICAL DESIGNATION ASSIGNED TO SPECIFIC WINDOW AS SHOWN IN ELEVATION.
2. SIZE: OVERALL WIDTH AND HEIGHT OF WINDOW IN FEET AND INCHES.
3. MATERIAL: INDICATES MATERIAL FROM WHICH FRAME IS CONSTRUCTED, I.E., HM - HOLLOW METAL, WD - WOOD, AL - ALUMINUM, ETC.
4. GLASS: DESIGNATES TYPE OF GLASS TO BE INSTALLED IN WINDOW, I.E., TG - TEMPERED GLASS, LAM - LAMINATED GLASS, WGL - WIRE GLASS, INSUL - INSULATING GLASS, ETC.
5. DETAILS: REFERENCE NUMBERS FOR SECTIONS AS CONDITIONS EXIST AT THE WALL, SILL, OR HEAD OF FRAMES WITH ANY UNUSUAL DETAIL REFERENCED UNDER SEPARATE HEADING 5d.
6. WINDOW FRAME FIRE RATING: DESIGNATES ALPHABETICAL FIRE RESISTANCE RATING CLASSIFICATION LABEL REQUIRED FOR WINDOW FRAME WITH TIME PERIOD REQUIRED IN HOURS.
7. REMARKS: REFERENCES SPECIAL, UNUSUAL OR ABSTRACT CONDITIONS WHICH EXIST AND ARE NOT COVERED IN SCHEDULE ITEMS 1 THRU 6 REFER TO REMARKS REFERENCE SCHEDULE FOR NUMERICAL DESIGNATIONS.

WINDOW NOTES:

1. PROVIDE NAIL FIN ADAPTER FOR ALL ALUMINUM WINDOWS.
2. PROVIDE PENETRATION FLASHINGS AT ALL EXTERIOR OPENINGS.
3. PROVIDE VERTICAL LOUVER BLINDS AT ALL NON-BUNK ROOM EXTERIOR WINDOWS.
4. PROVIDE HORIZONTAL LOUVER BLINDS AT BUNK ROOMS PER SPECS.

GLAZING TYPES:

TYPE **GL1**: INSULATED GLASS (EXTERIOR): ONE-INCH SEALED INSULATED UNIT CONSISTING OF AN EXTERIOR LITE OF 1/4" LOW-E TINTED TEMPERED FLOAT GLASS, 1/2" GAS FILLED AIR SPACE, AND 1/4" CLEAR TEMPERED FLOAT GLASS INTERIOR LITE

TYPE **GL2**: CLEAR TEMPERED GLASS: 1/4" CLEAR TEMPERED FLOAT GLASS

TYPE **SP**: CERAMIC COATED SPANDREL GLASS (EXTERIOR); ONE-INCH INSULATING SPANDREL UNIT CONSISTING OF 1/4" CLEAR, 1/2" AIR SPACE AND 1/4" CLEAR WITH SPANDREL COLOR TO BE SELECTED FROM MANUFACTURERS FULL CUSTOM COLOR RANGE.

MATERIAL / FINISH ABBREVIATIONS

ALUM	=	ALUMINUM
AN	=	ANODIZED
PF	=	PRE-FINISHED FACTORY FINISH
HM	=	HOLLOW METAL
PTD	=	PAINTED
STL	=	STEEL
TG	=	TEMPERED GLAZING
WV	=	WOOD, VENEER
WS	=	WOOD, SOLID CORE
Y	=	YES

PBK
ARCHITECT PBK Architects, Inc.
PBK.com
SAN LUIS OBISPO
408 Higuera Street, Ste 100
San Luis Obispo, CA 93401
805-329-3076

FIRE STATION #44
COASTSIDE FIRE PROTECTION DISTRICT

501 STETSON STREET
MOSS BEACH, CA 94038
PLAN CHECK 02 RESPONSE

BID SET

KEY PLAN
PLAN NORTH
TRUE NORTH

CLIENT
COASTSIDE FIRE PROTECTION DISTRICT
PROJECT NUMBER
230137
DATE 03/13/2026
DRAWN BY: KF/OS CHKED BY: AD
REVISIONS

#	DESCRIPTION	DATE

This document is for plan review only

DOOR & WINDOW SCHEDULES

A8.1

5/29/2026 4:37:46 PM

STEP ONE:

A. CUT OPENING IN W.R.B. AROUND PERIMETER OF ROUGH OPENING
B. CUT HEAD FLAP AT 45 TO EXPOSE 8" OF SHEATHING, FLIP HEAD FLAP UP AND TEMPORARILY SECURE AS SHOWN IN STEP 2
C. CUT SIDE FLAPS AT 45 TO EXPOSE 8" OF SHEATING, FLIP SIDE FLAPS BACK AND TEMPORARILY SECURE WITH W.R.B. TAPE

STEP TWO:

D. PRIME ALL SUBSTRATE TO RECEIVE SELF-ADHERED WEATHER BARRIER FLASHING (W.B.F.)
E. INSTALL PREFABRICATED FLASHING CORNERS

STEP THREE:

F. INSTALL SELF-ADHERED WEATHER BARRIER SILL FLASHING (W.B.F.) FULL DEPTH OF SILL

STEP FOUR:

G. INSTALL W.B.F. CORNER REINFORCING STRIPS, EXTEND 2" MIN BEYOND CORNERS

STEP FIVE:

H. INSTALL METAL SILL PAN WITH TURNED UP SIDE AND END DAMS. FASTEN TO JAMBS THROUGH END DAMS, DO NOT FASTEN THROUGH SILL. RE: 11 / A8.2

STEP SIX:

I. W.B.F. FULL DEPTH OF JAMB FRAMING. LAP OVER SILL PAN END DAMS.

STEP SEVEN:

J. CUT AND FOLD W.B.F. INTO ROUGH OPENING HEAD, FULL DEPTH OF FRAMING.

STEP EIGHT:

K. INTERMITTENT PLASTIC SHIMS
L. METAL SILL RECEPTOR (WHERE OCCURS), FASTEN TO JAMBS THROUGH END DAMS, DO NOT FASTEN THROUGH SILL
M. BLOCK FRAME WINDOW, FASTEN THROUGH JAMBS & HEAD, DO NOT FASTEN THROUGH SILL

STEP NINE:

N. FORMED METAL HEAD FLASHING RE: 11 / A8.2

STEP TEN:

O. LAP W.B.F. OVER METAL HEAD FLASHING FLANGE

STEP ELEVEN:

P. CASING BEAD, CUT EXTENDED ENDS & FORM TABS TO LAP SHINGLE FASHION PER ENLARGEMENT BELOW
Q. WEEP SCREED CASING BEAD AT HEAD
R. FULLY SEAL CORNER LAPS & TABS WITH BUTYL TAPE

STEP TWELVE:

S. CONTINUOUS SEALANT & BACKER ROD AT JAMBS
T. INTERMITTENT SEALANT AT SILL
U. DO NOT SEAL BETWEEN HEAD FLASHING AND WEEP SCREED CASING BEAD

STEP THIRTEEN:

V. FOLD W.R.B. JAMB FLAPS BACK OVER CASING BEAD FLANGE AND TRIM EXCESS TO ALLOW 1" EXPOSED FLANGE
W. SEAL CUTS WITH S.A.F. STRIP FLASHING
X. SEAL W.R.B. JAMB FLAPS WITH W.R.F., EXTEND BEYOND OPENING AS SHOWN

STEP FOURTEEN:

Y. FOLD W.R.B. HEAD FLAP OVER CASING BEAD FLANGE AND TRIM EXCESS TO ALLOW 1" EXPOSED FLANGE LEG
Z. SEAL W.R.B. HEAD FLAP WITH W.R.F., LAP CASING BEAD 1" MIN. EXTEND BEYOND JAMB FLASHING AS SHOWN
AA. SEAL CUTS WITH S.A.F. STRIP FLASHING

NOTES

1. THIS SEQUENCE REPRESENTS A TYPICAL WINDOW CONDITION. SEE DETAILS FOR PROJECT SPECIFIC REQUIREMENTS
2. REFER TO DETAILS FOR METAL TRIM TYPES, FASTENING REQUIREMENTS AND METAL FLASHING CONFIGURATIONS
3. ALL FLASHING FASTENERS SHALL PENETRATE THROUGH ONE LAYER (MIN) OF W.R.F. AND WITH A SECOND LAYER LAPPED OVER FASTENER HEADS 1" MIN.
4. ALL LAPS AND EXPOSED EDGES OF SELF-ADHERED W.R.F. SHALL BE SEALED PER MANUFACTURER'S INSTRUCTIONS
5. UTILIZE THIS PROCEDURE SEQUENCE FOR EXTERIOR DOOR OPENINGS

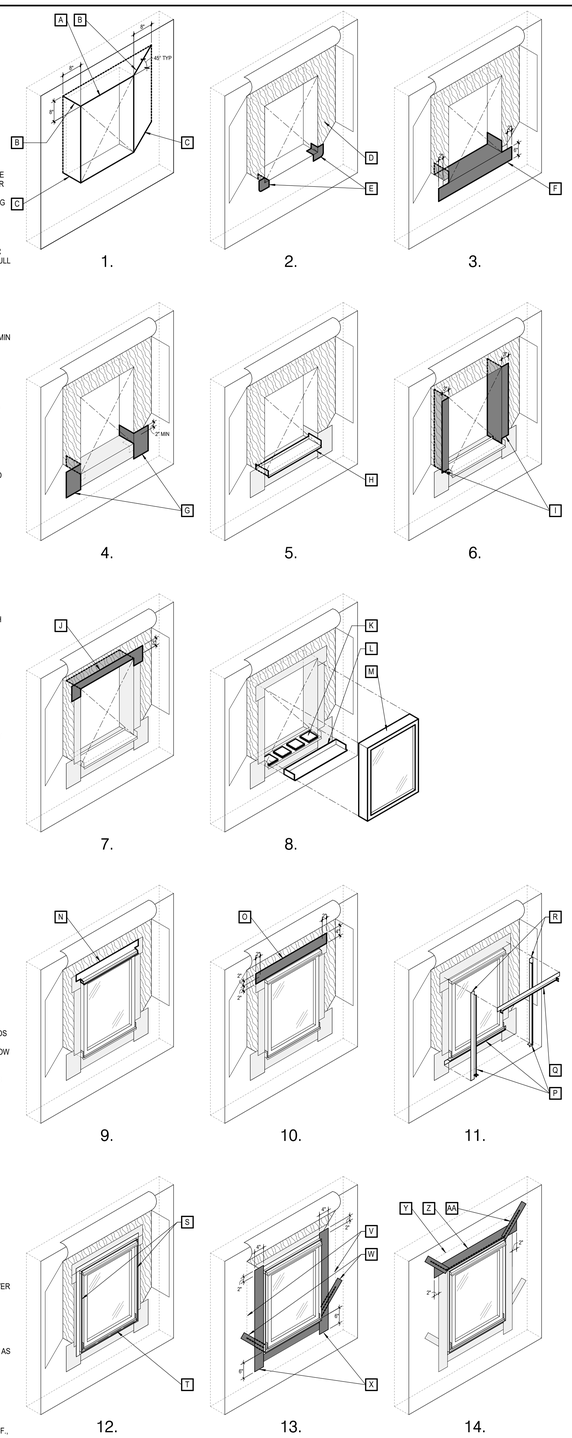

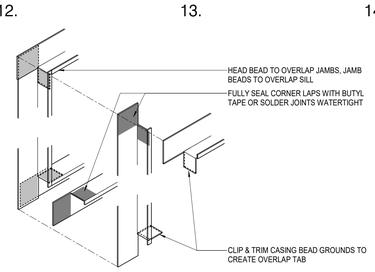

CASING BEAD OVERLAP

30 TYPICAL OPENING FLASHING
SCALE: 1/2" = 1'-0"

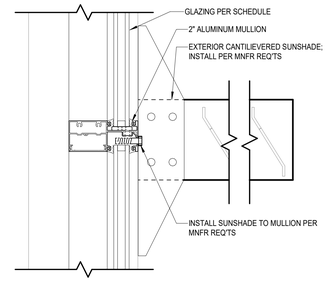

A **SECTION**

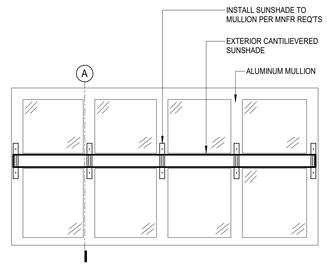

B **WINDOW ELEVATION**
NTS

17 SUNSHADE AT ALUM WINDOW
SCALE: 3" = 1'-0"

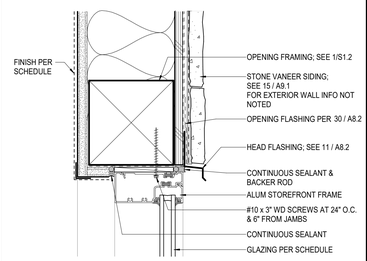

18 EXT ALUM HEAD - STONE
SCALE: 3" = 1'-0"

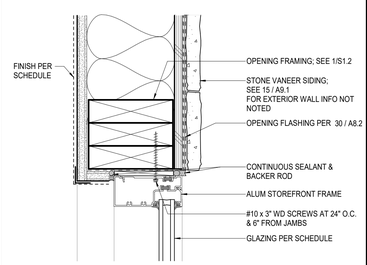

19 EXT ALUM JAMB - STONE
SCALE: 3" = 1'-0"

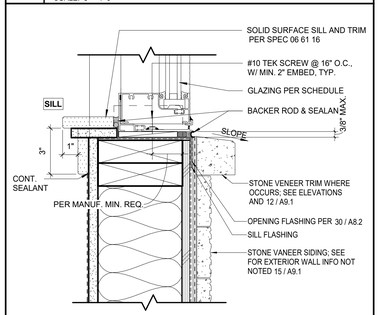

20 EXT ALUM WINDOW SILL - STONE
SCALE: 3" = 1'-0"

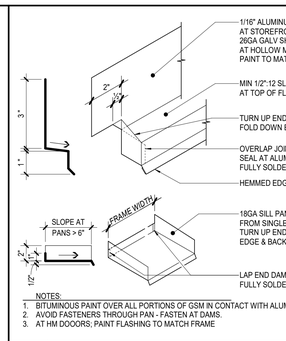

NOTES:
1. BITUMINOUS PAINT OVER ALL PORTIONS OF GSM IN CONTACT WITH ALUMINUM .
2. AVOID FASTENERS THROUGH PAN - FASTEN AT DAMS.
3. AT HM DOOORS; PAINT FLASHING TO MATCH FRAME

11 METAL HEAD & SILL PAN FLASHING
SCALE: NOT TO SCALE

NOT USED

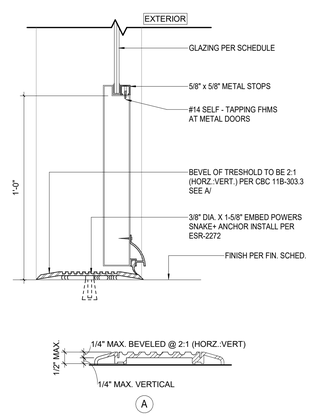

NOTE: SET EXTERIOR DOOR THRESHOLDS WITH FULL-WIDTH BEAD OF ELASTOMERIC SEALANT ON EACH POINT OF CONTACT WITH FLOOR, PROVIDING A CONTINUOUS WEATHER SEAL, PER SPECS.

15 EXT ALUM DOOR THRESHOLD
SCALE: 3" = 1'-0"

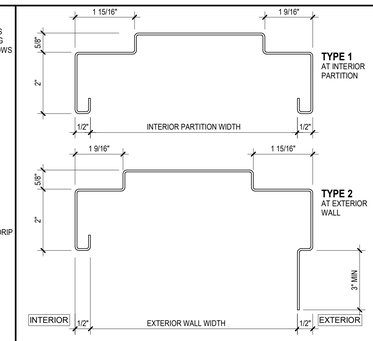

6 HM DOOR FRAME PROFILES
SCALE: 6" = 1'-0"

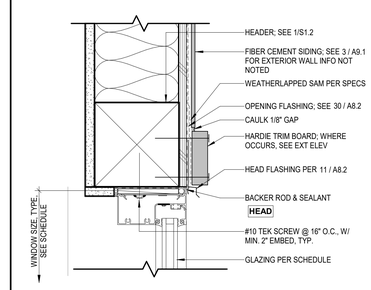

7 EXT ALUM HEAD - FIBER CEMENT W/ TRIM
SCALE: 3" = 1'-0"

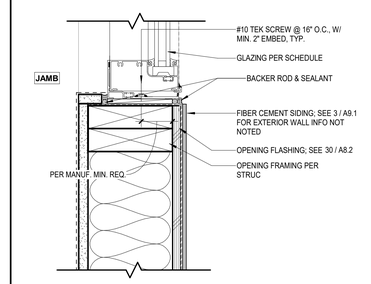

8 EXT ALUM JAMB - FIBER CEMENT
SCALE: 3" = 1'-0"

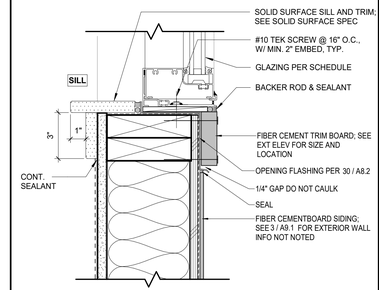

9 EXT ALUM SILL - FIBER CEMENT W/ TRIM
SCALE: 3" = 1'-0"

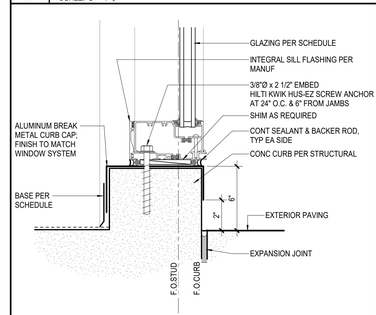

10 EXT ALUM WINDOW SILL - CURB
SCALE: 3" = 1'-0"

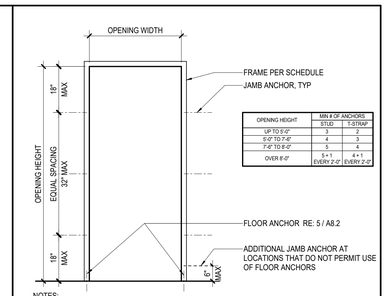

OPENING HEIGHT	MIN # OF ANCHORS	
	STUD	T-STRAP
UP TO 5'-0"	3	2
5'-0" TO 7'-6"	4	3
7'-6" TO 8'-0"	5	4
OVER 8'-0"	5 + 1 EVERY 2'-0"	4 + 1 EVERY 2'-0"

NOTES:
1. REFER TO JAMB DETAILS FOR ANCHOR TYPES.
2. FOR (E) CONCRETE AND MASONRY OPENINGS, ATTACH FRAMES WITH EXPANSION BOLT TYPE ANCHORS LOCATED 6" MAX FROM TOP AND BOTTOM WITH INTERMEDIATE ANCHORS AT 28" O.C. MAX. RE: - / ---

1 FRAME ANCHOR LOCATIONS
SCALE: 1/2" = 1'-0"

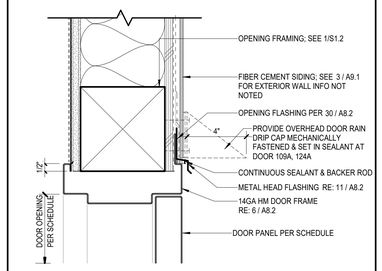

2 EXT HM DOOR HEAD - FIBER CEMENT
SCALE: 3" = 1'-0"

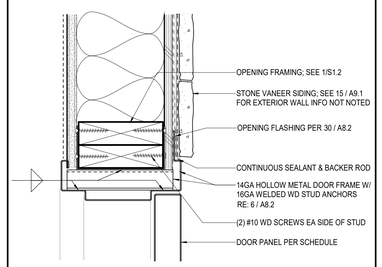

3 EXT HM DOOR JAMB - STONE
SCALE: 3" = 1'-0"

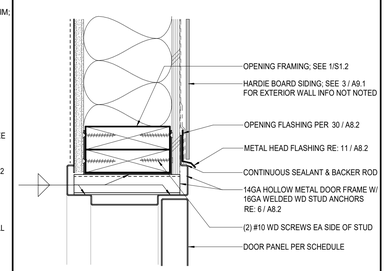

4 EXT HM DOOR JAMB - FIBER CEMENT
SCALE: 3" = 1'-0"

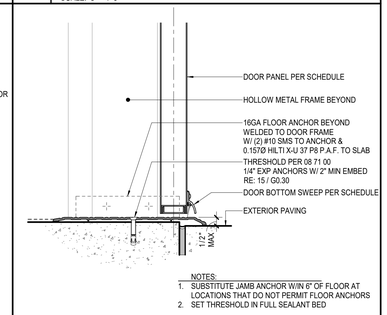

NOTES:
1. SUBSTITUTE JAMB ANCHOR W/IN 6" OF FLOOR AT LOCATIONS THAT DO NOT PERMIT FLOOR ANCHORS
2. SET THRESHOLD IN FULL SEALANT BED

5 EXTERIOR HM DOOR THRESHOLD
SCALE: 3" = 1'-0"

PBK

ARCHITECT PBK Architects, Inc.
PBK.com
SAN LUIS OBISPO
408 Higuera Street, Ste 100
San Luis Obispo, CA 93401
805-329-3076

FIRE STATION #44
COASTSIDE FIRE PROTECTION DISTRICT

501 STETSON STREET
MOSS BEACH, CA 94038
PLAN CHECK 02 RESPONSE

BID SET

KEY PLAN
PLAN NORTH
TRUE NORTH

This document is for plan review only

CLIENT
COASTSIDE FIRE PROTECTION DISTRICT
PROJECT NUMBER
230137
DATE 03/13/2026
DRAWN BY: KF/OS CHKED BY: AD
REVISIONS

#	DESCRIPTION	DATE

EXTERIOR DOOR & WINDOW DETAILS

A8.2

5/29/2026 4:37:49 PM

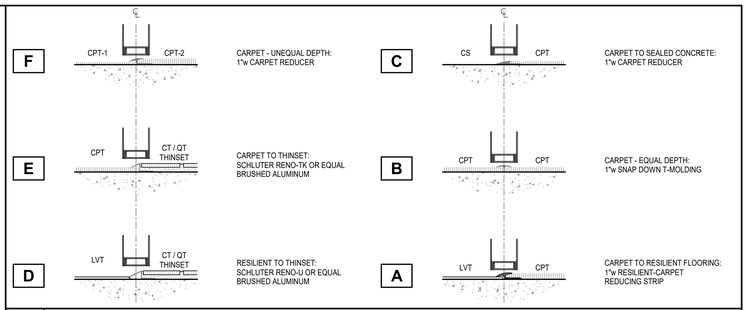

6 INTERIOR TRANSITIONS
SCALE: 3" = 1'-0"

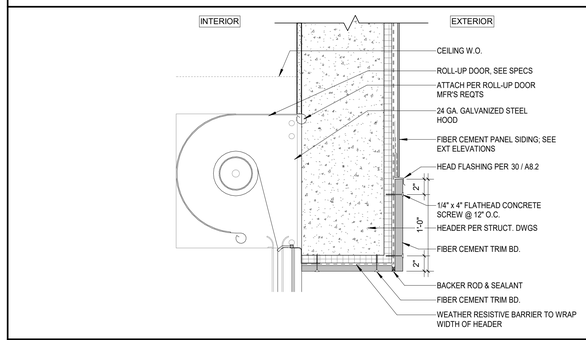

28 ROLL-UP DOOR HEAD - FIBER CEMENT W/ TRIM
SCALE: 1 1/2" = 1'-0"

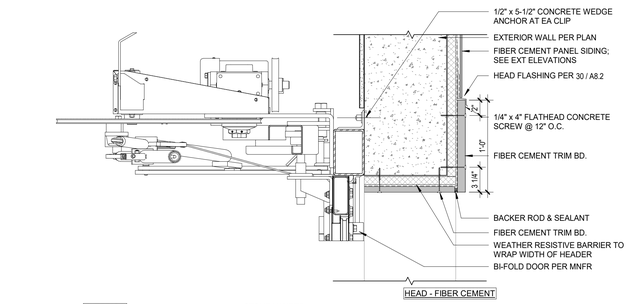

HEAD - FIBER CEMENT

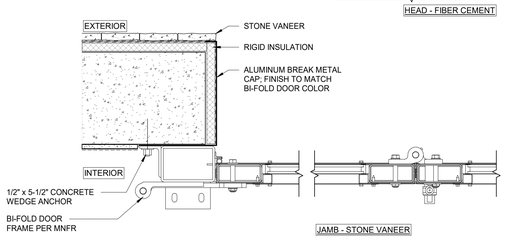

JAMB - STONE VANEER

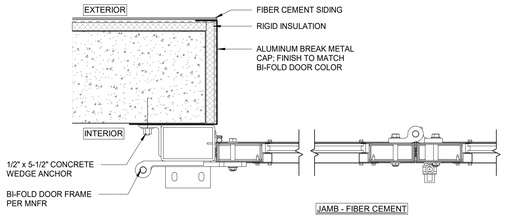

JAMB - FIBER CEMENT

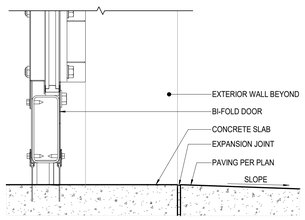

THRESHOLD

19 BI-FOLDING DOOR
SCALE: 1 1/2" = 1'-0"

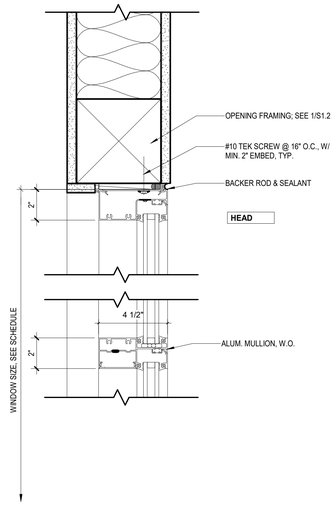

8 INTERIOR ALUM DR/WDW HEAD
SCALE: 3" = 1'-0"

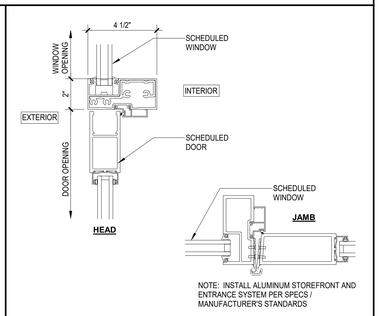

2 ALUM DOOR / WINDOW TRANS.
SCALE: 3" = 1'-0"

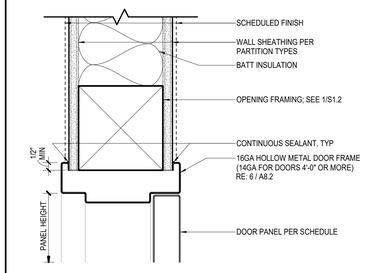

3 INTERIOR HM DOOR HEAD
SCALE: 3" = 1'-0"

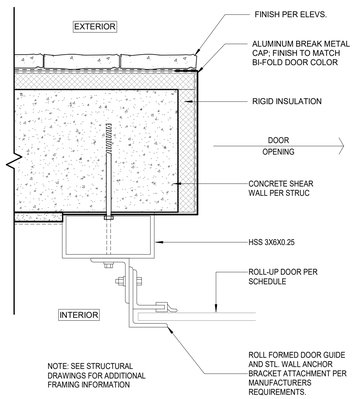

25 ROLL-UP DOOR JAMB
SCALE: 3" = 1'-0"

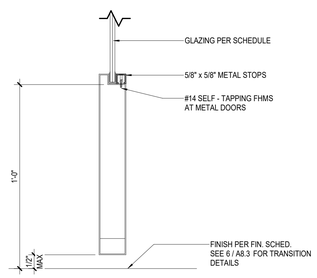

20 INTERIOR ALUM DOOR SILL
SCALE: 3" = 1'-0"

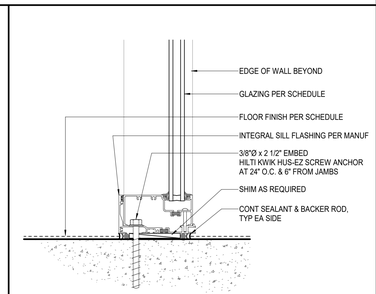

15 ALUM WINDOW SILL
SCALE: 3" = 1'-0"

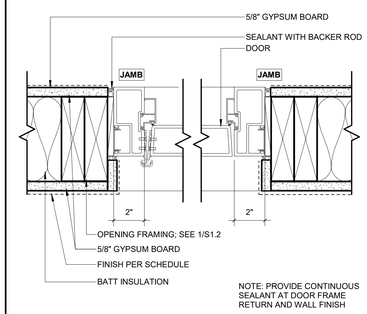

9 INTERIOR ALUM DR/WDW JAMB
SCALE: 3" = 1'-0"

4 INTERIOR HM DOOR JAMB
SCALE: 3" = 1'-0"

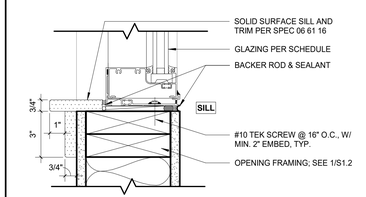

10 INTERIOR ALUM WINDOW SILL
SCALE: 3" = 1'-0"

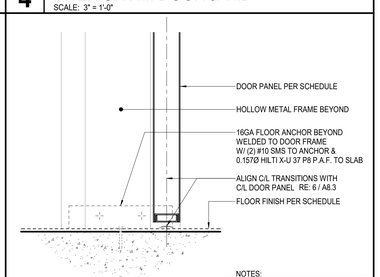

NOTES:
1. SUBSTITUTE JAMB ANCHOR W/IN 6" OF FLOOR AT LOCATIONS THAT DO NOT PERMIT FLOOR ANCHORS

5 INTERIOR HM DOOR THRESHOLD
SCALE: 3" = 1'-0"

PBK
ARCHITECT PBK Architects, Inc.
PBK.com
SAN LUIS OBISPO
408 Higuera Street, Ste 100
San Luis Obispo, CA 93401
805-329-3076

FIRE STATION #44
COASTSIDE FIRE PROTECTION DISTRICT

501 STETSON STREET
MOSS BEACH, CA 94038
PLAN CHECK 02 RESPONSE

BID SET

KEY PLAN
PLAN NORTH
TRUE NORTH

CLIENT
COASTSIDE FIRE PROTECTION DISTRICT
PROJECT NUMBER
230137
DATE 03/13/2026
DRAWN BY: KF/OS CHKED BY: AD
REVISIONS

#	DESCRIPTION	DATE

This document is for plan review only

DOOR & WINDOW DETAILS

A8.3

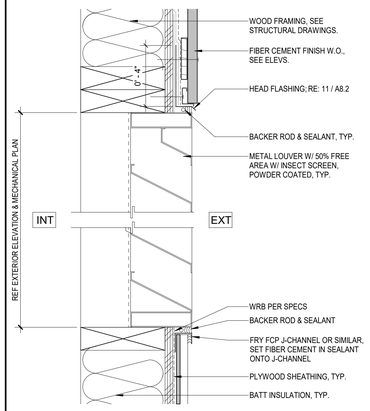

18 WALL LOUVER @ STUD WALL
SCALE: 3" = 1'-0"

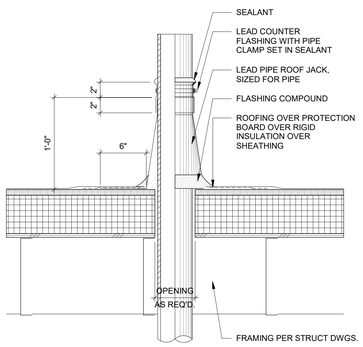

19 PIPE ROOF VENT
SCALE: 1 1/2" = 1'-0"

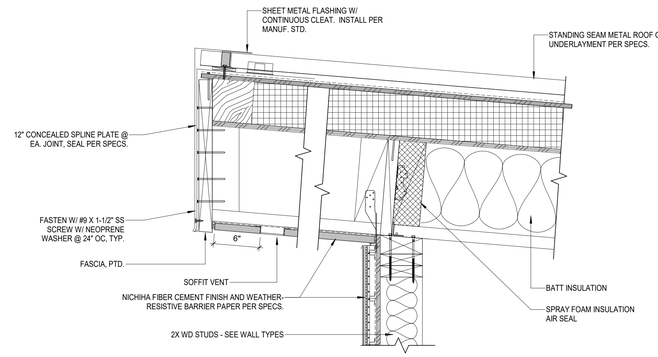

14 HIGH EAVE
SCALE: 1 1/2" = 1'-0"

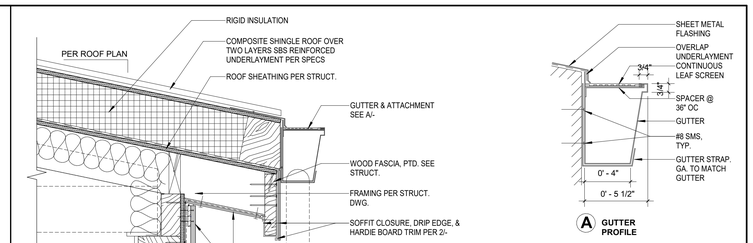

5 LOW EAVE / GUTTER
SCALE: 1 1/2" = 1'-0"

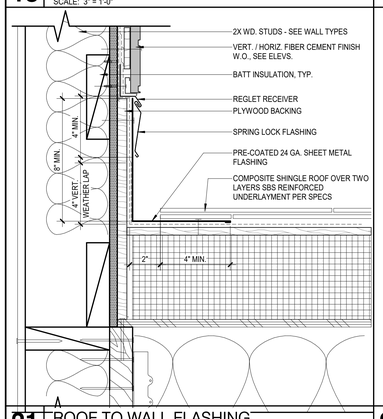

21 ROOF TO WALL FLASHING
SCALE: 3" = 1'-0"

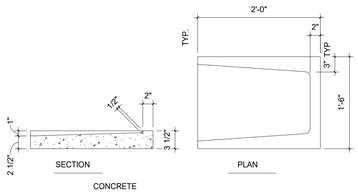

20 SPLASH BLOCK
SCALE: 1" = 1'-0"

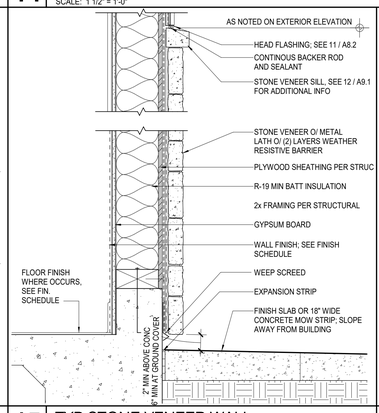

15 TYP STONE VENEER WALL
SCALE: 1 1/2" = 1'-0"

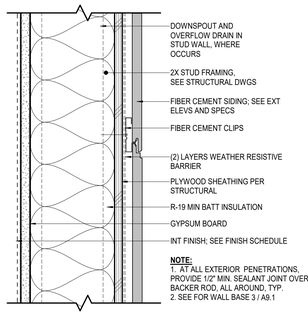

11 TYP FIBER CEMENT WALL
SCALE: 3" = 1'-0"

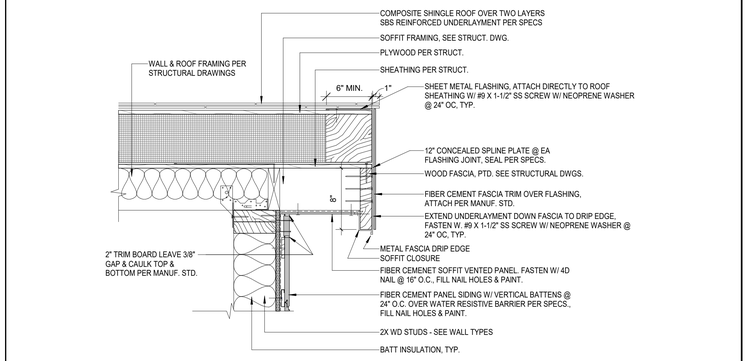

6 RAKE DETAIL
SCALE: 1 1/2" = 1'-0"

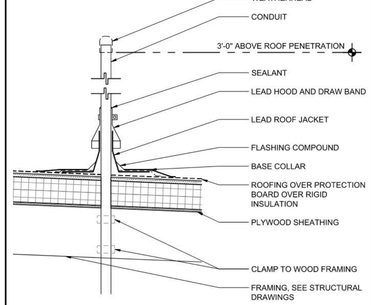

22 CONDUIT AT ROOF
SCALE: 1" = 1'-0"

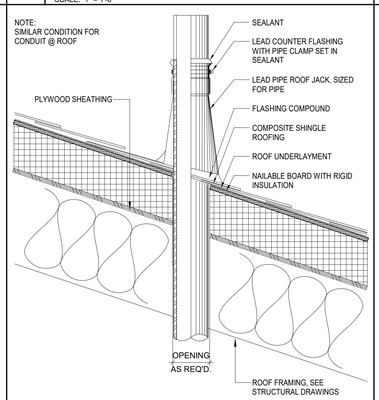

23 PIPE ROOF VENT
SCALE: 1 1/2" = 1'-0"

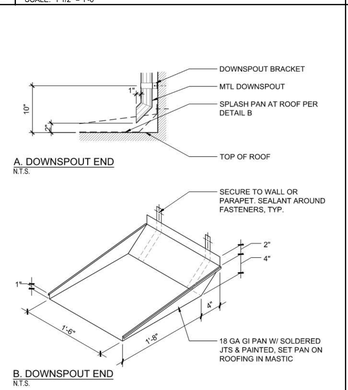

16 SPLASH PAN
SCALE: 1" = 1'-0"

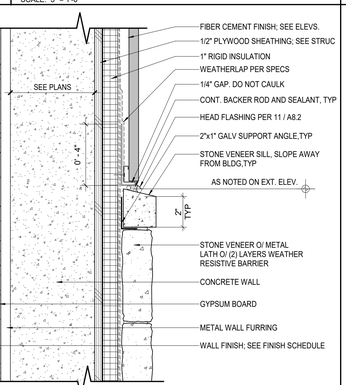

12 STONE VENEER WAINSCT
SCALE: 3" = 1'-0"

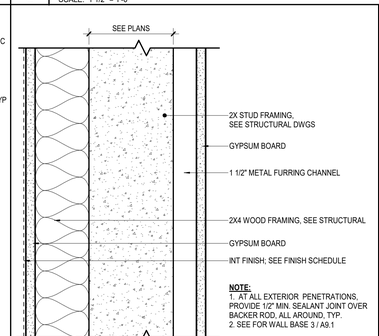

7 APP BAY WALL
SCALE: 3" = 1'-0"

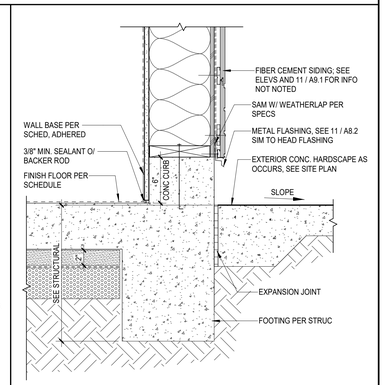

3 FIBER CEMENT WALL BASE
SCALE: 1 1/2" = 1'-0"

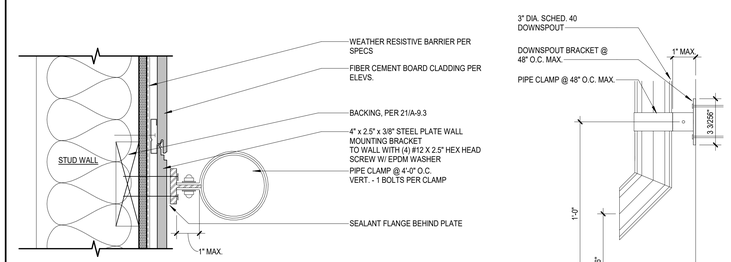

24 EXTERIOR - DRAIN SUPPORT
SCALE: 3" = 1'-0"

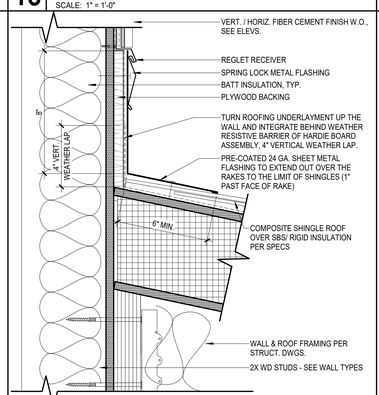

17 HIGH EAVE AT WALL
SCALE: 3" = 1'-0"

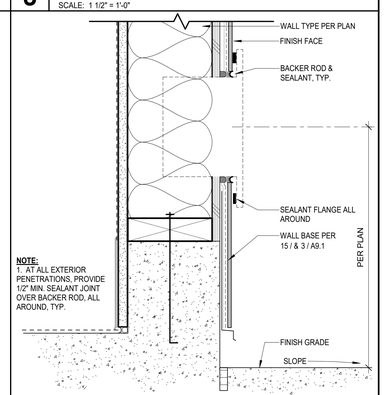

4 TYPICAL PENETRATION
SCALE: 3" = 1'-0"

PBK
ARCHITECT PBK Architects, Inc.
PBK.com
SAN LUIS OBISPO
408 Higuera Street, Ste 100
San Luis Obispo, CA 93401
805-329-3076

FIRE STATION #44
COASTSIDE FIRE PROTECTION DISTRICT

501 STETSON STREET
MOSS BEACH, CA 94038
PLAN CHECK 02 RESPONSE

BID SET

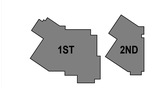

KEY PLAN
PLAN NORTH
TRUE NORTH

This document is for plan review only

CLIENT	
COASTSIDE FIRE PROTECTION DISTRICT	
PROJECT NUMBER	
230137	
DATE	03/13/2026
DRAWN BY: KF/OS	CHKED BY: AD

REVISIONS

#	DESCRIPTION	DATE

EXTERIOR DETAILS

A9.1

5/29/2026 4:37:54 PM

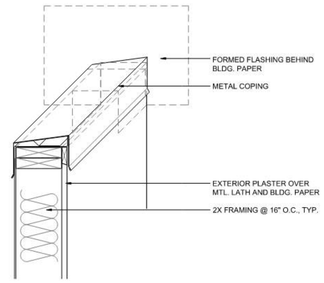

16 FLASHING AT INTERSECTING WALLS
SCALE: 1 1/2" = 1'-0"

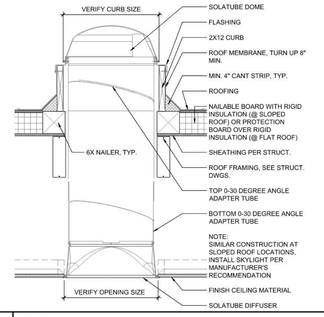

11 TUBULAR SKYLIGHT
SCALE: 1" = 1'-0"

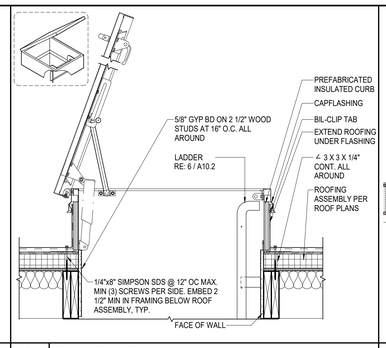

6 ROOF HATCH
SCALE: 1" = 1'-0"

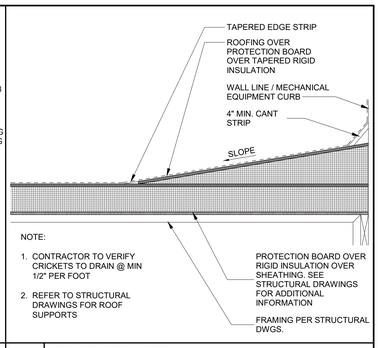

NOTE:
1. CONTRACTOR TO VERIFY CRICKETS TO DRAIN @ MIN 1/2" PER FOOT
2. REFER TO STRUCTURAL DRAWINGS FOR ROOF SUPPORTS

1 ROOF CRICKET
SCALE: 1" = 1'-0"

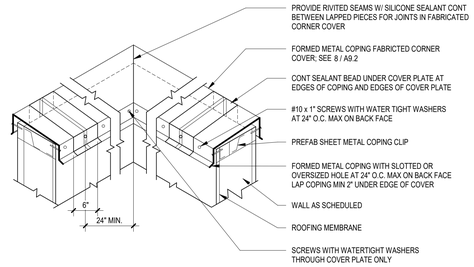

7 COPING CORNER & SPLICE TYP
SCALE: 1 1/2" = 1'-0"

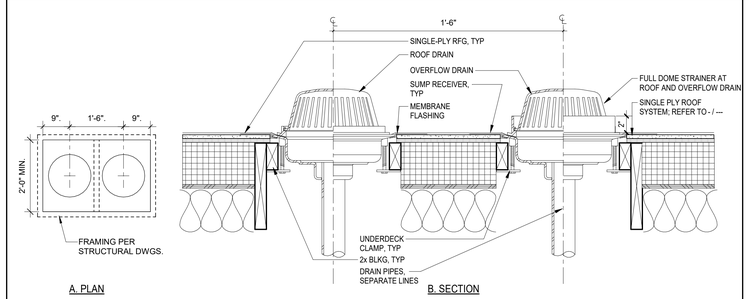

18 ROOF - DRAIN AND OVERFLOW
SCALE: 1 1/2" = 1'-0"

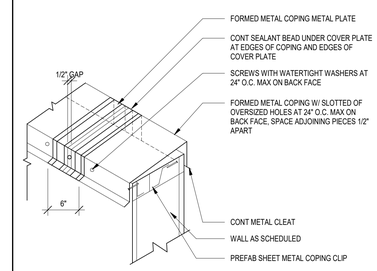

8 COPING DETAIL
SCALE: 1 1/2" = 1'-0"

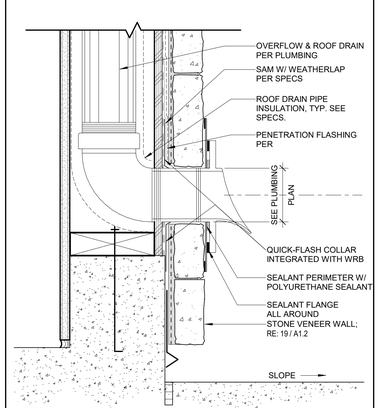

15 OVERFLOW DRAIN TERMINATION
SCALE: 3" = 1'-0"

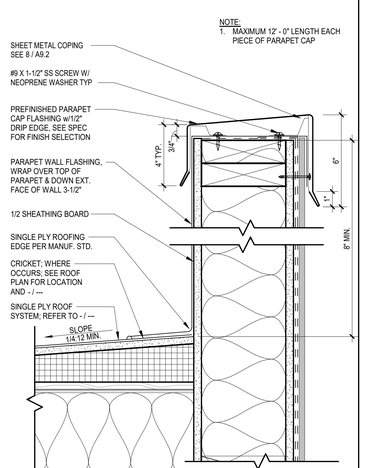

10 PARAPET
SCALE: 3" = 1'-0"

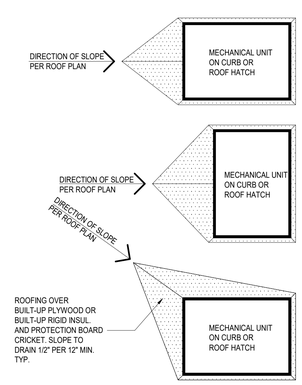

5 ROOF EQUIPMENT CRICKETS
SCALE: 1/2" = 1'-0"

PBK

ARCHITECT PBK Architects, Inc.
PBK.com
SAN LUIS OBISPO
408 Higuera Street, Ste 100
San Luis Obispo, CA 93401
805-329-3076

FIRE STATION #44
COASTSIDE FIRE PROTECTION DISTRICT

501 STETSON STREET
MOSS BEACH, CA 94038
PLAN CHECK 02 RESPONSE

BID SET

KEY PLAN
PLAN NORTH
TRUE NORTH

CLIENT
COASTSIDE FIRE PROTECTION DISTRICT
PROJECT NUMBER
230137
DATE 03/13/2026
DRAWN BY: KF/OS CHKED BY: AD
REVISIONS

#	DESCRIPTION	DATE

ROOF DETAILS

This document is for plan review only

A9.2

5/29/2026 4:37:56 PM

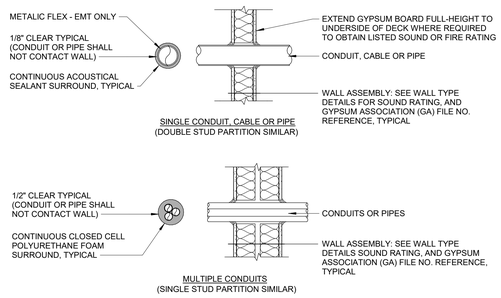

NOTES:
1. CONDUIT, CABLE, PIPE, ETC. PENETRATIONS OF ACOUSTICAL PARTITIONS SHALL BE ACOUSTICALLY SEALED AS SHOWN. ANY GAP LARGER THAN 1/2" SHALL BE COVERED WITH SCREW ATTACHED GYPSUM BOARD, LAPPED A MINIMUM OF 2". PRIOR TO INSTALLING ACOUSTICAL SEALANT.
2. WHERE ELECTRICAL BOXES OR SIMILAR ONE-SIDED WALL PENETRATIONS OCCUR, OFFSET ONE STUD CAVITY FROM PENETRATIONS ON OPPOSITE SIDE OF SOUND WALL AND SEAL ANNULAR SPACE.

10 CONDUIT / PIPE PEN. ACOUSTIC PROVISIONS
SCALE: 1" = 1'-0"

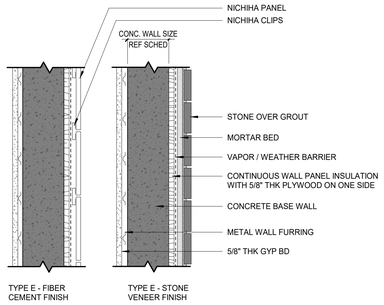

CONC SIZE	WALL THK (NOT INCL FIN.)	FIRE RATING (CBC / UL / GA LISTING) 0 HR	1 HR	2 HR	REMARKS
8	11 1/2	**E8**	——	——	
12	13 1/2	**E12**	——	——	

PLAN INDICATION
NON RATED

NOTES SCHEDULE
A. PROVIDE CONTINUOUS WALL PANEL INSULATION AS NOTED. SEE SPECS

NOTES:
1. REF FIN SCHED FOR FIN
3. ALL WALLS FULL HGT

NOTE:
1. REF 9.1 & 9.2 FOR WALL BASE & HEAD DTLS.
2. THE WEIGHTED AVERAGE U-FACTOR OF THE WALL ASSEMBLY SHALL NOT EXCEED 0.110.

5 WALL TYPE E
SCALE: 1 : 1

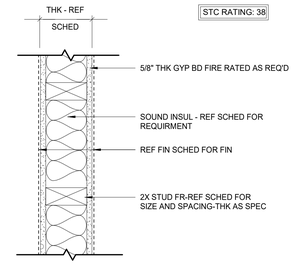

NOTE:
1. REF 5/A10.2 FOR BASE DTL
2. REFERENCE 8, 10, 14/- FOR PENETRATION DTL.
3. WHERE SHEARWALL OCCURS, ADD ADDITIONAL 15/32" THK. TO ACCOMODATE PLYWOOD PER STRUCT.

STUD-SIZE	WALL THK	FIRE RATING (CBC / UL / GA LISTING) 0 HR	1 HR	2 HR	REMARKS
4	4 3/4	**A4**	——	——	
6	6 3/4	**A6**	——	——	
6	6 3/4	**A6P**	——	——	42" PARTIAL HEIGHT

PLAN INDICATION
NON RATED

NOTES
A. PROVIDE 5 - 1/2" THK SOUND INSUL

NOTES:
1. REF FIN SCHED FOR FIN
2. STUDS SPACED 16" OC
3. ALL WALLS FULL HGT

1 WALL TYPE A
SCALE: 1 : 1

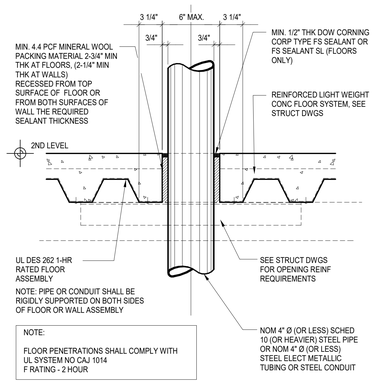

NOTE:
FLOOR PENETRATIONS SHALL COMPLY WITH UL SYSTEM NO CAJ 1014
F RATING - 2 HOUR

11 THRU PENET. FIRE STOP @ CONC FLOOR @ WALL
SCALE: 1 1/2" = 1'-0"

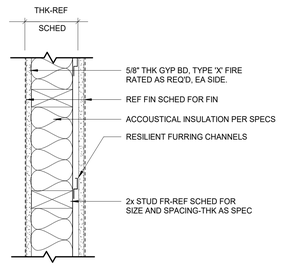

STUD SIZE	WALL THK (NOT INCL FIN.)	FIRE RATING (CBC / UL / GA LISTING) 0 HR	1 HR	2 HR	REMARKS
6	7 1/4	——	**F6*1**	——	C6*A

PLAN INDICATION
RATED

NOTES SCHEDULE
A. ACCOUSTICAL INSULATION PER SPECS

NOTES:
1. REF FIN SCHED FOR FIN
3. ALL WALLS FULL HGT

NOTE:
1. REF 12 / - WALL BASE & HEAD DTLS.
2. REF 8, 10, 14 / - FOR PENETRATION DETAILS
3. THE WEIGHTED AVERAGE U-FACTOR OF THE WALL ASSEMBLY SHALL NOT EXCEED 0.110.

6 WALL TYPE F
SCALE: 1 : 1

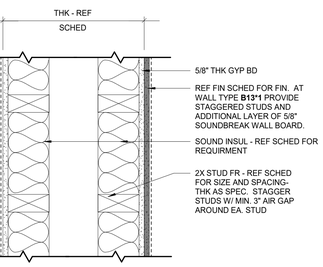

NOTE:
1. REF 13 / - FOR BASE DTL
2. REFERENCE 8, 10, 14 / - FOR PENETRATION DTL.
3. WHERE SHEARWALL OCCURS, ADD ADDITIONAL 15/32" THK. TO ACCOMODATE PLYWOOD PER STRUCT.

STUD-SIZE	WALL THK	FIRE RATING (CBC / UL / GA LISTING) 0 HR	1 HR	2 HR	REMARKS
6" studs 2" clr.	14 7/8"	——	**B13*1**	——	SOUND + FIRE RATED (STC 64)
6" studs 7" clr.	19 1/4"	**B18**	——	——	
6" studs 12" clr.	24 1/4"	**B23**	——	——	

PLAN INDICATION
NON RATED
RATED

NOTES
A. 2 LAYERS 5 1/2" THK SOUND INSUL

NOTES:
1. REF FIN SCHED FOR FIN
2. STUDS SPACED 16" OC
3. ALL WALLS FULL HGT

2 WALL TYPE B
SCALE: 1 : 1

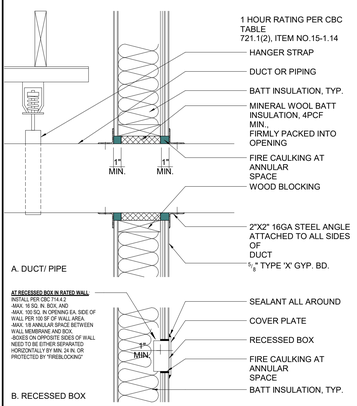

14 FIRE WALL PENETRATIONS
SCALE: 1 1/2" = 1'-0"

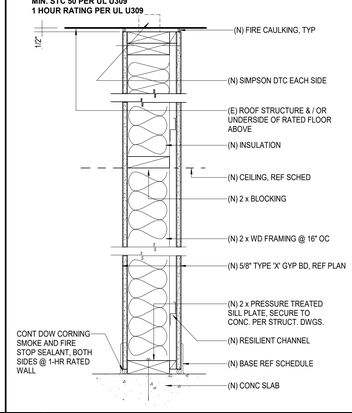

12 SOUND + FIRE RATED WALL
SCALE: 1 1/2" = 1'-0"

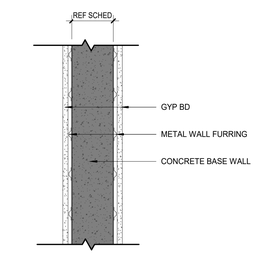

NOTE:
1. REF A9.1 & A9.2 FOR WALL BASE & HEAD DTLS.
2. THE WEIGHTED AVERAGE U-FACTOR OF THE WALL ASSEMBLY SHALL NOT EXCEED 0.110.

CONC SIZE	WALL THK (NOT INCL FIN.)	FIRE RATING (CBC / UL / GA LISTING) 0 HR	1 HR	2 HR	REMARKS
8	8	**G8**	——	——	C6*A

PLAN INDICATION
NON RATED

NOTES SCHEDULE
A. THERMAL INSULATION PER SPECS

NOTES:
1. REF FIN SCHED FOR FIN
3. ALL WALLS FULL HGT

* OPTIONAL CHARACTER

7 WALL TYPE G
SCALE: 1 : 1

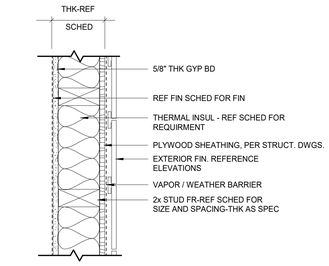

NOTE:
1. REF 9.1 & 9.2 FOR WALL BASE & HEAD DTLS.
2. THE WEIGHTED AVERAGE U-FACTOR OF THE WALL ASSEMBLY SHALL NOT EXCEED 0.110.

STUD SIZE	WALL THK (NOT INCL FIN.)	FIRE RATING (CBC / UL / GA LISTING) 0 HR	1 HR	2 HR	REMARKS
6	6 5/8	**C6**	——	——	
10	10 3/8	**C10**	——	——	

PLAN INDICATION
NON RATED

NOTES SCHEDULE
A. THERMAL INSULATION PER SPECS

NOTES:
1. REF FIN SCHED FOR FIN
2. STUDS SPACED 16" OC
3. ALL WALLS FULL HGT

3 WALL TYPE C
SCALE: 1 : 1

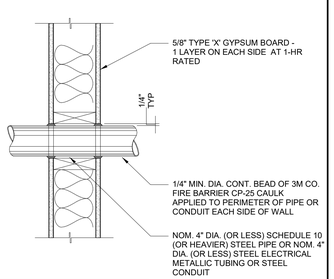

NOTE:
WALL PENETRATIONS SHALL COMPLY WITH UL SYSTEM NO. WL 1001
F RATING - 1 HOUR

8 1-HR THRU PENETRATION FIRE STOP
SCALE: 1 1/2" = 1'-0"

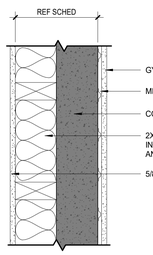

NOTE:
1. REF STRUCT. FOR WALL BASE / HEAD DETAIL & FINISH SCHED.
2. THE WEIGHTED AVERAGE U-FACTOR OF THE WALL ASSEMBLY SHALL NOT EXCEED 0.110.

STUD SIZE	CONC SIZE	WALL THK (NOT INCL FIN.)	FIRE RATING (CBC / UL / GA LISTING) 0 HR	1 HR	2 HR	REMARKS
N/A	8	12	**D8**	——	——	FURRED FINISH PER PLAN
N/A	8	9 1/2	——	**D8*1**	——	1 HOUR RATED
4" STUDS	8	13 5/8	**D14**	——	——	STUD / FURRED PER PLAN
4" STUDS	8	16 1/4	**D16**	——	——	STUDS EA. SIDE PER PLAN

PLAN INDICATION
NON RATED

NOTES SCHEDULE
A. THERMAL INSULATION PER SPECS

NOTES:
1. REF FIN SCHED FOR FIN
3. ALL WALLS FULL HGT

4 WALL TYPE D
SCALE: 1 : 1

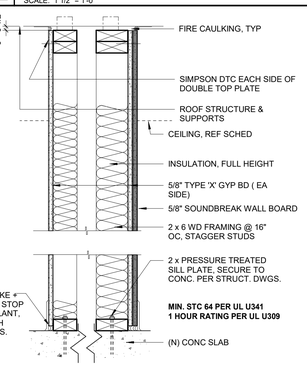

13 SOUND + FIRE RATED DBL STUD WALL
SCALE: 1 1/2" = 1'-0"

5/29/2026 4:37:58 PM

PBK
ARCHITECT PBK Architects, Inc.
PBK.com
SAN LUIS OBISPO
408 Higuera Street, Ste 100
San Luis Obispo, CA 93401
805-329-3076

FIRE STATION #44
COASTSIDE FIRE PROTECTION DISTRICT

501 STETSON STREET
MOSS BEACH, CA 94038
PLAN CHECK 02 RESPONSE

BID SET

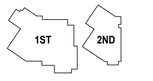

KEY PLAN
PLAN NORTH
TRUE NORTH

CLIENT
COASTSIDE FIRE PROTECTION DISTRICT
PROJECT NUMBER
230137
DATE 03/13/2026
DRAWN BY: KF/OS CHKED BY: AD
REVISIONS

#	DESCRIPTION	DATE

This document is for plan review only

WALL TYPES & DETAILS

A9.3

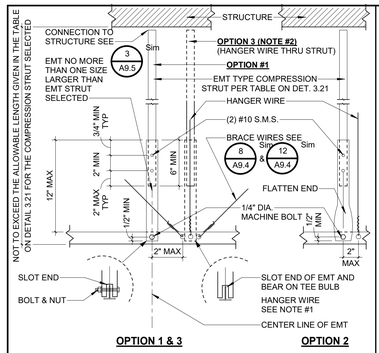

NOTE:

1. MACHINE BOLT IS NOTE REQUIRED ON OPTION 3
2. APPLIABLE TO SAWN TIMBER WITHOUT GYPSUM BOARD ONLY

10 EMT TYPE STRUT
SCALE: 1 1/2" = 1'-0"

EMT COMPRESSION STRUT	MAXIMUM LENGTH
1/2" DIAMETER EMT (0.42" WALL THICKNESS)	5' - 10"
3/4" EMT DIAMETER (0.049" WALL THICKNESS)	7' - 8"
1" EMT DIAMETER (0.057" WALL THICKNESS)	9' - 9"
1 1/4" EMT DIAMETER (0.065" WALL THICKNESS)	12' - 9"
1 1/2" EMT DIAMETER (0.065" WALL THICKNESS)	14' - 9"
2" EMT DIAMETER (0.065" WALL THICKNESS)	18' - 10"

CHANNEL COMPRESSION STRUT	MAXIMUM LENGTH
250S125-33	5' - 0"
250S137-33	6' - 10"
362S137-33	8' - 0"
250S137-43	8' - 10"
400S137-43	10' - 10"

11 COMPRESSION STRUT TABLE
SCALE: 3" = 1'-0"

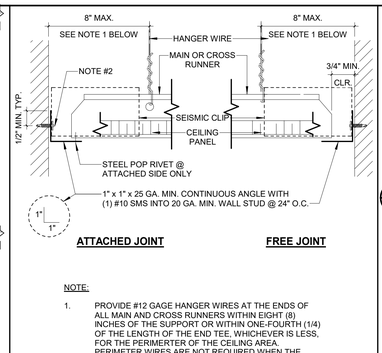

NOTE:

1. PROVIDE #12 GAGE HANGER WIRES AT THE ENDS OF ALL MAIN AND CROSS RUNNERS WITHIN EIGHT (8) INCHES OF THE SUPPORT OR WITHIN ONE-FOURTH (1/4) OF THE LENGTH OF THE END TEE, WHICHEVER IS LESS, FOR THE PERIMERTER OF THE CEILING AREA. PERIMETER WIRES ARE NOT REQUIRED WHEN THE LENGTH OF THE END TEE IS EIGHT (8) INCHES OR LESS.
2. REFER TO GENERAL NOTE 4.08 FOR WALL ANGLE ATTACHMENT
3. SEE 14/9.2 FOR ADDITIONAL INFORMATION AT CEIL. PERIMETER.

6 CEILING PERIMETER
SCALE: 6" = 1'-0"

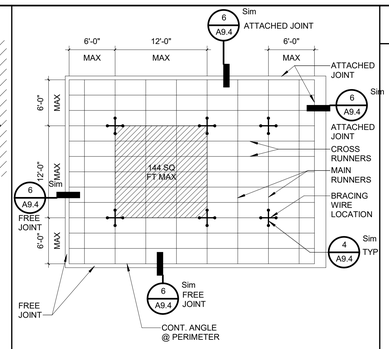

NOTE:

1. BRACING WIRES AND COMP. STRUT SHALL OCCUR AT EVERY 144 SQ. FT. MAX. IN ROOMS OVER 144 SQ. FT.

2 12'-0"x12'-0" BRACE ASSEMBLY
SCALE: 1/8" = 1'-0"

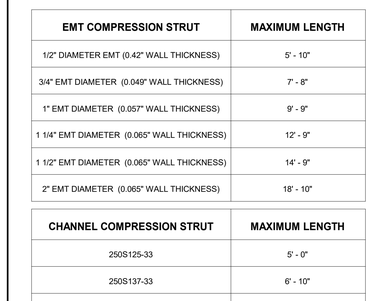

7 LIGHT/AIR TERMINAL SUPPORT
SCALE: 3" = 1'-0"

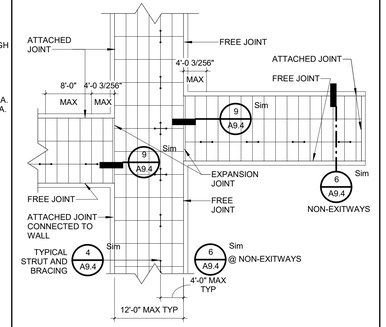

LOCATION OF EXPANSION/SLIP JOINTS IN CORRIDORS

3 CORRIDOR CEILING PLAN
SCALE: 3/32" = 1'-0"

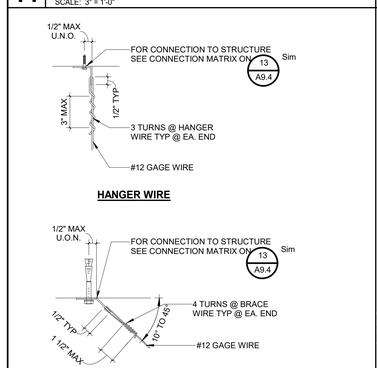

12 TYPICAL WIRE TURNS
SCALE: 3" = 1'-0"

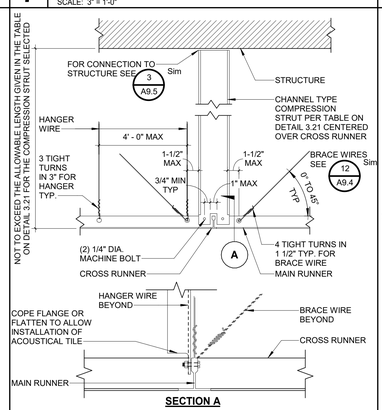

SECTION A

8 CHANNEL TYPE STRUT
SCALE: 1 1/2" = 1'-0"

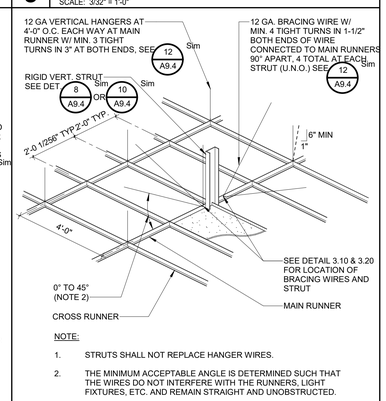

NOTE:

1. STRUTS SHALL NOT REPLACE HANGER WIRES.
2. THE MINIMUM ACCEPTABLE ANGLE IS DETERMINED SUCH THAT THE WIRES DO NOT INTERFERE WITH THE RUNNERS, LIGHT FIXTURES, ETC. AND REMAIN STRAIGHT AND UNOBSTRUCTED.

4 SUSPENSION AND BRACING
SCALE: 3/8" = 1'-0"

STRUCTURAL CONDITION OF FLOOR/ROOF ABOVE SUSPENDED CEILING	APPLICABLE HANGER WIRE DETAIL	APPLICABLE BRACING WIRE DETAIL
SAWN TIMBER	4.25	4.35
WOOD I JOIST	4.26	4.36
WOOD CHORD TRUSS	4.27	4.38

13 HANGER AND BRACE MATRIX
SCALE: 3" = 1'-0"

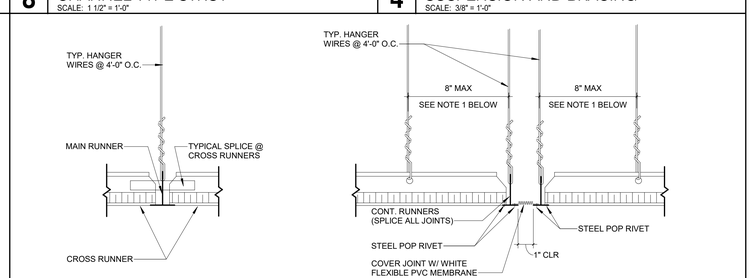

RUNNER SPLICE

EXPANSION JOINT

EXPANSION JOINTS AT THE INTERSECTIONS OF CORRIDORS AND AT JUNCTIONS OF OF CORRIDORS AND LOBBIES OR OTHER SIMILAR AREAS

NOTE:

1. PROVIDE #12 GAGE HANGER WIRES AT THE ENDS OF ALL MAIN AND CROSS RUNNERS WITHIN EIGHT (8) INCHES OF THE SUPPORT OR WITHIN ONE-FOURTH (1/4) OF THE LENGTH OF THE END TEE, WHICHEVER IS LESS, FOR THE PERIMETER OF THE CEILING AREA. PERIMETER WIRES ARE NOT REQUIRED WHEN THE LENGTH OF THE END TEE IS EIGHT (8) INCHES OR LESS.

9 EXPANSION JOINT AT INTERSECTIONS
SCALE: 3" = 1'-0"

METAL SUSPENSION SYSTEMS FOR LAY IN PANEL CEILINGS NOTES

1. CEILING SYSTEM GENERAL NOTES:

1.01 CEILING SYSTEM COMPONENTS SHALL COMPLY WITH ASTM C635-07 AND SECTION 5.1 OF ASTM E580-10A.

1.02 THE CEILING GRID SYSTEM MUST BE RATED HEAVY DUTY AS DEFINED BY ASTM C635-08.

1.03 CEILING SYSTEMS. THE FOLLOWING CEILING SYSTEM(S) IS/ARE PART OF THE SCOPE OF THIS PROJECT:

MANUFACTURER	ICC/ES REPORT	MAIN RUNNER	CROSS RUNNER
ARMSTRONG	ESR-1308	7301	XL7341 (1)
CHICAGO METALLIC	ESR-2631	200	1274 (2)
USG INTERIORS (DONN)	ESR-1222	DX26	DX424 (3)
CERTAINTEED	ESR-3336	CS12-12-20	CS4-12-12 (4)

FOOTNOTES:
(1) FOR 2X2 GRID USE XL7320
(2) FOR 2X2 GRID USE 1202
(3) FOR 2X2 GRID USE DX216
(4) FOR 2X2 GRID USE CS2-12-12

1.04 SEISMIC WALL CLIP:

MANUFACTURER	SEISMIC WALL CLIP MODEL NO.
ARMSTONG	BERC 2 / ESR-1308
CHICAGO METALLIC	1496 / ESR-2631
USG INTERIORS (DONN)	ACM7 / ESR-1222
CERTAINTEED	SEISMIC PERIM CLIP / ESR-3336

1.05 CEILING PANELS SHALL NOT SUPPORT ANY LIGHT FIXTURES, AIR TERMINALS OR DEVICES.

1.06 FOR CEILING INSTALLATIONS UTILIZING ACOUSTICAL TILE PANELS OF MINERAL OR GLASS FIBER, IT IS NOT MANDATORY TO PROVIDE 3/4 INCH CLEARANCE BETWEEN THE ACOUSTICAL TILE PANELS AND THE WALL ON THE SIDES OF THE CEILING WHICH ARE FREE TO SLIP. FOR ALL OTHER CEILING PANEL TYPES, PROVIDE 3/4" CLEARANCE BETWEEN THE CEILING PANEL AND THE WALL ON THE SIDES OF THE CEILING FREE TO SLIP.

1.07 SUSPENDED ACOUSTICAL CEILING SYSTEMS WITH A CEILING AREA OF 144 SQUARE FEET OR LESS, SURROUNDED BY WALLS WHICH CONNECT DIRECTLY TO THE STRUCTURE ABOVE, DO NOT REQUIRE BRACING ASSEMBLIES WHEN ATTACHED TO TWO ADAJACENT WALLS.

1.08 EXPANSION JOINTS SHALL BE PROVIDED IN THE CEILING AT INTERSECTIONS OF CORRIDORS AND AT JUNCTIONS OF CORRIDORS AND LOBBIES OR OTHER SIMILAR AREAS.

1.09 FOR CEILING AREAS EXCEEDING 2,500 SQUARE FEET, A SEISMIC SEPERATION JOINT SHALL BE PROVIDED TO DIVIDE THE CEILING INTO SYMETRICAL AREAS NOT EXCEEDING 2,500 SQUARE FEET.

1.10 FOR ACOUSTICAL TILE PANELS OF MINERAL OR GLASS FIBER, IT IS NOT MANDATORY TO PROVIDE A 3/4 INCH CLEARANCE BETWEEN THE TILE PANEL AND THE WALL ON THE FREE ENDS OF THE CEILING WHERE IT IS ALLOWED TO SLIP.

1.11 PANELS WEIGHING MORE THAN ONE-HALF (1/2) PSF, OTHER THAN MINERAL AND GLASS FIBER ACOUSTICAL TILE, AND ALL METAL AND WOOD PANELS SHALL BE POSITIVELY ATTACHED TO THE CEILING SUSPENSION RUNNERS BY MECHANICAL MEANS, SUCH AS BOLTS, SCREWS, OR RIVETS, AND EACH ATTACHMENT SHALL HAVE THE ALLOWABLE DESIGN STRENGTH TO SUPPORT 100 PERCENT OF THE WEIGHT OF THE PANEL ACTING IN ANY DIRECTION. A MINIMUM OF TWO (2) ATTACHMENTS ARE REQUIRED FOR EACH PANEL. IT IS ALSO PERMITTED TO PROVIDE A SECONDARY MEANS OF CONNECTING THE PANEL TO THE STRUCTURE ABOVE TO RETAIN THE PANEL FROM DROPPING OUT, CEILING GRID DISTORTION AND THE CEILING GRID BECOMING OUT-OF-LEVEL.

1.12 FREE FLOATING CEILING SHALL BE SUPPORTED BY WIRES AS DETAILED AND SHALL ALSO BE BRACED WITH WIRES AS DETAILED. THE PERIMETER EDGE SHALL BE SUPPORTED BY A CONTINOUS RUNNER AT THE PERIMETER EDGE AND SHALL BE SPLICED IN COMPLIANCE WITH ASTM E580.

1.13 COMPRESSION STRUTS SHALL HAVE A MAXIMUM KL/R NOT TO EXCEED 300. STRUTS SHALL NOT BE MORE THAN ONE (HORIZONTAL) IN SIX (VERTICAL) OUT OF PLUMB.

2. MATERIALS:

2.01 CEILING WIRE SHALL BE CLASS 1 ZINC COATED (GALVANIZED) CARBON STEEL CONFORMING TO ASTM A641-09A. WIRE SHALL BE #12 GAGE (0.106" DIAMETER) WITH SOFT TEMPER AND MINIMUM TENSILE STRENGTH = 70 KSI.

2.02 GALVANIZED SHEET STEEL (INCLUDING THAT USED FOR METAL STUD AND TRACK COMPRESSION STRUTS/POST) SHALL CONFORM TO ASTM A653-11, OR OTHER EQUIVALENT SHEET STEEL LISTED IN SECTION A2.1 OF THE NORTH AMERICAN SPECIFICATION FOR THE DESIGN OF COLD-FORMED STEEL STRUCTURAL MEMBERS 2007, INCLUDING SUPPLEMENT 2 DATED 2010 (AISI S100-07/S2-10). MATERIAL 43 MIL (18 GAGE) AND LIGHTER SHALL HAVE MINIMUM YIELD STRENGTH OF 33 KSI. MATERIAL 54 MIL (16 GAGE) AND HEAVIER SHALL HAVE A MINIMUM YIELD STRENGTH OF 50 KSI.

2.03 ELECTRICAL METALLIC TUBE (EMT) SHALL BE ANSI C80.3/UL 797 CARBON STEEL WITH G90 GALVANIZING. EMT SHALL MINIMUM YIELD STRENGTH (FY) OF 30 KSI AND MINIMUM ULTIMATE STRENGTH (FU) OF 48 KSI.

3. ATTACHMENT OF HANGER AND BRACING WIRES:

3.01 SEPARATE ALL CEILING HANGER AND BRACING WIRES AT LEAST SIX (6) INCHES FROM ALL UNBRACED DUCTS, PIPES, CONDUIT, ETC.

3.02 HANGER AND BRACING WIRES SHALL NOT ATTACH TO OR BEND AROUND OBSTRUCTIONS INCLUDING BUT NOT LIMITED TO: PIPING, DUCTWORK, CONDUIT AND EQUIPMENT.

3.03 HANGER WIRES THAT ARE MORE THAN ONE (HORIZONTAL) IN SIX (VERTICAL) OUT OF PLUMB SHALL HAVE COUNTER-SLOPING WIRES.

3.04 SLACK SAFETY WIRES SHALL BE CONSIDERED HANGER WIRES FOR INSTALLATION AND TESTING REQUIREMENTS.

3.05 HANGER AND BRACING WIRE ANCHORAGE TO THE STRUCTURE SHALL BE INSTALLED IN SUCH A MANNER THAT THE DIRECTION OF THE ANCHORAGE ALIGNS CLOSELY WITH THE DIRECTION OF THE WIRE. (E.G. BRACING WIRE CEILING CLIPS MUST BE BENT AS SHOWN IN THE DETAILS AND ROTATED AS REQUIRED TO ALIGN CLOSELY WITH THE DIRECTION OF THE WIRE, SCREW EYES IN WOOD MUST BE INSTALLED SO THEY ALIGN CLOSELY WITH THE DIRECTION OF THE WIRE, ETC.)

3.06 FASTEN HANGER WIRES WITH NOT LESS THAN THREE (3) TIGHT TURNS IN THREE (3) INCHES. HANGER WIRE LOOPS SHALL BE TIGHTLY WRAPPED AND SHARPLY BENT TO PREVENT VERTICAL MOVEMENT OR ROTATION WITH IN LOOPS PER ASTM E580.

3.07 FASTEN BRACING WIRES WITH NOT LESS THAN FOUR (4) TIGHT TURNS IN ONE AND ONE-HALF (1-1/2) INCHES.

3.08 WIRE TURNS MADE BY MACHINE WHERE BOTH STRANDS HAVE BEEN DEFORMED OR BENT IN WRAPPING CAN HAVE THE ONE AND ONE-HALF (1-1/2) INCH REQUIREMENT WAIVED, BUT THE NUMBER OF TURNS SHOULD BE MAINTAINED, AND BE AS TIGHT AS POSSIBLE.

3.09 PROVIDE TRAPEZE OR OTHER SUPPLEMENTARY SUPPORT MEMBERS AT OBSTRUCTIONS TO ALLOW TYPICAL HANGER SPACING.

3.10 PROVIDE ADDITIONAL HANGERS, STRUCTS, AND BRACE ASSEMBLIES AS REQUIRED AT ALL CEILING BREAKS, SOFFITS, OR DISCONTINUOUS AREAS.

3.11 SPLICES WILL NOT BE PERMITTED IN ANY HANGER WIRES UNLESS THE SPLICE IS CONSTURCTED ACCORDING TO THE SPECIFIC DETAILS PROVIDED IN THESE DOCUMENTS.

3.12 THE GAGE AND SPACING OF ANY EXISTING WIRE TO BE SPLICED MUST COMPLY WITH CURRENT CODE REQUIREMENTS.

3.12 THE SLOPE OF BRACING WIRES SHALL NOT EXCEED 45 DEGREES FROM THE HORIZONTAL PLANE AND WIRES SHALL BE TAUT.

4. FASTENERS AND WELDING:

4.01 SHEET METAL SCREWS SHALL COMPLY WITH ASTM C1513-10, ASME B18.6.4-89 (R2005). PENETRATION OF SCREWS THROUGH JOINED MATERIAL SHALL NOT BE LESS THAN THREE EXPOSED THREADS.

4.02 EXPANSION ANCHORS SHALL BE: AS LISTED IN THE GENERAL NOTES ON DRAWING A0.1. DIAMETER, EMBEDMENTAND ICC/ES REPORT SHALL BE AS SHOWN ON DRAWING A0.1 AND AS INDICATED ON THE DETAILS.

4.03 POWER-ACTUATED FASTENERS SHALL BE: AS LISTED IN THE GENERAL NOTES ON DRAWING A0.1. DIAMETER, EMBEDMENTAND ICC/ES REPORT SHALL BE AS SHOWN ON DRAWING A0.1 AND AS INDICATED ON THE DETAILS.

4.04 IF NOT OTHERWISE SPECIFIED IN THE EVALUATION REPORT, POWER-ACTUATED FASTENERS INSTALLED IN STEEL SHALL BE INSTALLED SO THE ENTIRE POINTED END OF THE FASTENER IS DRIVEN THROUGH THE STEEL MEMBER.

4.05 POWER-ACTUATED FASTENERS IN CONCRETE ARE NOT PERMITTED FOR BRACING WIRES.

4.06 CONCRETE REINFORCEMENT AND PRESTRESSING TENDONS SHALL BE LOCATED BY NON-DESTRUCTIVE MEANS PRIOR TO INSTALLING POST-INSTALLED ANCHOR.

4.07 WELDING SHALL BE IN ACCORDANCE WITH AWS D1.3 USING E60XX SERIES ELECTRODES.

4.08 ANCHORS FOR WALL ANGLES:

A. AT WOOD STUD WALL: 8D COMMON NAIL AT 16" O.C. INTO SOLID BLOCKING.

5. TESTING: ALL FIELD TESTING MUST BE PERFORMED IN THE PRESENCE OF THE PROJECT INSPECTOR.

5.01 POST-INSTALLED ANCHORS IN CONCRETE USED TO SUPPORT HANGER WIRES SHALL BE TESTED AT A FREQUENCY OF 10 PERCENT. POWER-ACTUAUTED FASTENERS IN CONCRETE SHALL BE FIELD TESTED FOR 200 LB. IN TENSION. ALL OTHER POST-INSTALLED ANCHORS IN CONCRETE SHALL BE TESTED IN ACCORDANCE WITH CBC SECTION 1913A.7.

5.02 POST-INSTALLED ANCHORS IN CONCRETE USED TO ATTACH BRACING WIRES SHALL BE TESTED AT A FREQUENCY OF 50 PERCENT IN ACCORDANCE WITH CBC SECTION 1913A.7.

5.03 ALL EXISTING CEILING HANGER WIRE/ANCHOR ASSEMBLIES MUST BE TESTED TO 200 LBS.

5.04 ALL EXISTING BRACING WIRE/ANCHOR ASSEMBLIES MUST BE FIELD TESTED TO 440 LB.

5.05 WHERE A NEW WIRE IS SPLICED TO AN EXISTING WIRE, EACH SPLICED WIRE/ANCHOR ASSEMBLY MUST BE FIELD TESTED TO THE LOADS REQUIRED FOR EXISTING CEILING OR BRACE WIRES.

6. LIGHT FIXTURES:

6.01 ALL LIGHT FIXTURES SHALL BE POSITIVELY ATTACHED TO THE CEILING SUSPENSION SYSTEMS BY MECHANICAL MEANS TO RESIST A HORIZONTAL FORCE EQUAL TO THE WEIGHT OF THE FIXTURE. A MINIMUM OF TWO SCREWS OR APPROVED FASTENERS ARE REQUIRED AT EACH LIGHT FIXTURE, PER ASTM E580, SECTION 5.3.1.

6.02 SURFACE-MOUNTED LIGHT FIXTURES SHALL BE ATTACHED TO THE MAIN RUNNER WITH AT LEAST TWO POSITIVE CLAMPING DEVICES. THE CLAMPING DEVICE SHALL COMPLETELY SURROUND THE SUPPORTING CEILING RUNNER AND BE MADE OF STEEL WITH A MINIMUM THICKNESS OF #14 GAGE. ROTATIONAL SPRING CATCHES DO NOT COMPLY. A #12 GAGE SLACK SAFETY WIRE SHALL BE CONNECTED FROM EACH CLAMPING DEVICE TO THE STRUCTURE ABOVE. PROVIDE ADDITIONAL SUPPORTS WHEN LIGHT FIXTURES ARE EIGHT (8) FEET OR LONGER OR EXCEED 56 LB. MAXIMUM SPACING BETWEEN SUPPORTS SHALL NOT EXCEED EIGHT (8) FEET.

6.03 LIGHT FIXTURES WEIGHING LESS THAN OR EQUAL TO 10 LB. SHALL HAVE A MINIMUM OF ONE (1) #12 GAGE SLACK SAFETY WIRE CONNECTED FROM THE FIXTURE HOUSING TO THE STRUCTURE ABOVE.

6.04 LIGHT FIXTURES WEIGHING GREATER THAN 10 LB. BUT LESS THAN OR EQUAL TO 56 LB. MAY BE SUPPORTED DIRECTLY ON THE CEILING RUNNERS, BUT THEY SHALL HAVE A MINIMUM OF TWO (2) #12 GAGE SLACK SAFETY WIRES CONNECTED FROM THE FIXTURE HOUSING AT DIAGONAL CORNERS TO THE STRUCTURE ABOVE.

EXCEPTION: ALL LIGHT FIXTURES GREATER THAN TWO BY FOUR FEET WEIGHING LESS THAN 56 LB. SHALL HAVE A #12 GAGE SLACK SAFETY WIRE AT EACH CORNER.

6.05 ALL LIGHT FIXTURES WEIGHING GREATER THAN 56 LB. SHALL BE INDEPENDENTLY SUPPORTED BY NOT LESS THAN FOUR (4) TAUT #12 GAGE HANGER WIRES (ONE AT EACH CORNER) ATTACHED FROM THE FIXTURE HOUSING TO THE STRUCTURE ABOVE OR OTHER APPROVED HANGERS. THE FOUR (4) TAUT #12 GAGE WIRES OR OTHER APPROVED HANGERS, INCLUDING THEIR ATTACHMENT TO THE STRUCTURE ABOVE, SHALL BE CAPABLE OF SUPPORTING FOUR (4) TIMES THE WEIGHT OF THE FIXTURE.

6.06 WHERE PENDANT MOUNTED LIGHT FIXTURES ARE INSTALLED IN AN AREA WITH A SUSPENDED CEILING THE LIGHT FIXTURE SHALL BE SUPPORTED DIRECTLY FROM THE STRUCTURE ABOVE WITH HANGER WIRES OR CABLE PASSING THRU EACH PENDANT HANGER AND SHALL BE CAPABLE OF SUPPORTING TWO (2) TIMES THE WEIGHT OF THE FIXTURE.

6.07 IF A PENDANT MOUNTED LIGHT FIXTURE IS DIRECTLY AND INDEPENDENTLY BRACED BELOW THE CEILING THEN A BRACE ASSEMBLY IS NOT REQUIRED ABOVE THE THE CEILING.

6.08 IF A PENDANT MOUNTED LIGHT FIXTURE IS FREE TO SWING 45 DEGREES FROM THE VERTICAL IN ALL DIRECTIONS, AND IS NOT DIRECTLY OR INDEPENDENTLY BRACED BELOW THE CEILING, THEN A BRACING ASSEMBLY IS ONLY REQUIRED WHERE THE PENDANT HANGER PENETRATES THE CEILING.

6.09 WHERE THE WEIGHT OF THE PENDANT FIXTURE IS LESS THAN 20 LB. THE VERTICAL COMPONENT OF THE BRACE FORCE NEED NOT BE CONSIDERED. NO COMPRESSION POST/STRUT IS REQUIRED.

7. SERVICES WITHIN THE CEILING:

7.01 ALL FLEXIBLE SPRINKLER HOSE FITTING MOUNTING BRACKETS, CEILING-MOUNTED AIR TERMINALS OR OTHER SERVICES SHALL BE POSITIVELY ATTACHED TO THE CEILING SUSPENSION SYSTEMS BY MECHANICAL MEANS. SCREWS OR APPROVED FASTENERS ARE REQUIRED. A MINIMUM OF TWO ATTACHMENTS ARE REQUIRED AT EACH COMPONENT.

7.02 CEILING-MOUNTED AIR TERMINALS OR OTHER SERVICES WEIGHING LESS THAN OR EQUAL TO 20 LB. SHALL HAVE ONE (1) #12 GAGE SLACK SAFETY WIRE ATTACHED FROM THE TERMINAL OR SERVICE TO THE STRUCTURE ABOVE.

7.03 FLEXIBLE SPRINKLER HOSE FITTINGS, CEILING-MOUNTED AIR TERMINALS OR OTHER SERIVCES WEIGHING MORE THAN 20 LB. BUT LESS THAN OR EQUAL TO 56 LB. SHALL HAVE TWO (2) #12 GAGE SLACK SAFETY WIRES (AT DIAGONAL CORNERS) CONNECTED FROM THE TERMINAL OR SERVICE TO THE STRUCTURE ABOVE.

7.04 FLEXIBLE SPRINKLER HOSE FITTINGS, CEILING-MOUNTED AIR TERMINALS OR OTHER SERIVCES WEIGHING MORE THAN 56 LB. SHALL BE SUPPORTED DIRECTLY FROM THE STRUCTURE ABOVE BY NOT LESS THAN FOUR (4) TAUT #12 GAGE HANGER WIRES ATTACHED FROM THE TERMINAL OR SERVICE TO THE STRUCTURE ABOVE OR OTHER APPROVED HANGERS.

7.05 PENETRATIONS THRU CEILING PANELS FOR SPRINKLER HEADS AND OTHER SIMILAR DEVICES THAT ARE NOT INTEGRALLY TIED TO THE CEILING SYSTEM SHALL HAVE A TWO (2) INCH OVERSIZED RING OR SLEEVE THRU THE CEILING PANEL TO ALLOW ONE (1) INCH OF MOVEMENT IN ALL HORIZONTAL DIRECTIONS. PENETRATIONS TO BE COVERED WITH AN ESCUTCHEON PLATE. FLEXIBLE SPRINKLER HOSE THAT CAN ACCOMODATE THE ONE (1) INCH OF MOVEMENT SHALL NOT REQUIRE THE OVERSIZED SLEEVE OR ADAPTER.

8. OTHER DEVICES WITHIN THE CEILING:

8.01 ALL LIGHTWEIGHT MISCELLANEOUS DEVICES, SUCH AS STROBE LIGHTS, OCCUPANCY SENSORS, SPEAKERS, EXIT SIGN, ETC., SHALL BE ATTACHED TO THE CEILING GRID. IN ADDITION, DEVICES WEIGHING MORE THAN 10 LB. SHALL HAVE A #12 GAGE SLACK SAFETY WIRE ANCHORED TO THE STRUCTURE ABOVE. DEVICES WEIGHING MORE THAN 20 LB. SHALL BE SUPPORTED INDEPENDENTLY FROM THE STRUCTURE ABOVE.

8.02 ALL AIR TERMINALS AND OTHER DEVICES SHALL BE MOUNTED IN A MANNER THAT WILL NOT COMPROMISE CEILING PERFORMANCE IN ACCORDANCE WITH SECTION 13.5.6.2.2, ITEM 5 OF ASCE 7 AS AMENDED BY CBC SECTION 1616A.120 AND ASTM E580 SECTIONS 5.3 AND 5.4.

8.03 CEILING PANELS SHALL NOT SUPPORT ANY LIGHT FIXTURES, AIR TERMINALS OR OTHER DEVICES.

PBK
ARCHITECT PBK Architects, Inc.
PBK.com
SAN LUIS OBISPO
408 Higuera Street, Ste 100
San Luis Obispo, CA 93401
805-329-3076

FIRE STATION #44
COASTSIDE FIRE PROTECTION DISTRICT
501 STETSON STREET
MOSS BEACH, CA 94038
PLAN CHECK 02 RESPONSE

BID SET

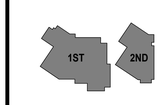

KEY PLAN
PLAN NORTH
TRUE NORTH

CLIENT
COASTSIDE FIRE PROTECTION DISTRICT
PROJECT NUMBER
230137
DATE 03/13/2026
DRAWN BY: KF/OS CHKED BY: AD
REVISIONS

#	DESCRIPTION	DATE

This document is for plan review only

SUSPENDED CEILING DETAILS

A9.4

5/29/2026 4:38:00 PM

A9.5 - SUSPENDED CEILING DETAILS

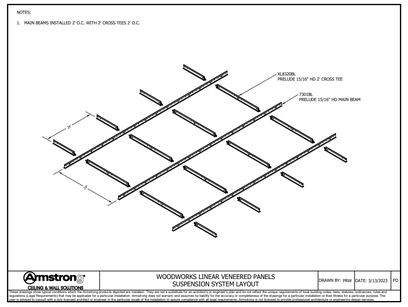

21 Linear Veneered Panels - 2ft OC MB Grid Build
SCALE: NTS

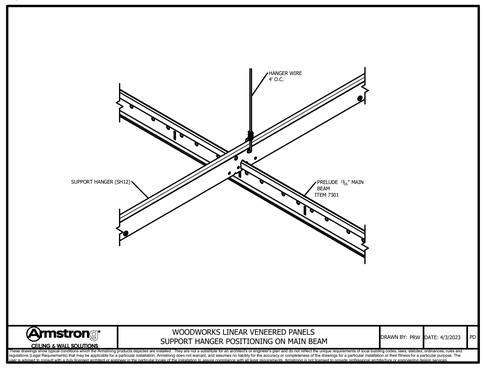

22 WOODWORKS Linear Veneered Panels - SH12 Attachment to Main Beam
SCALE: 3" = 1'-0"

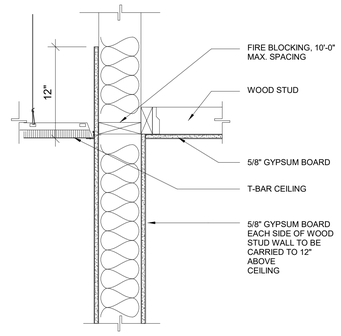

13 TYP SUSP. GYP BD CEIL
SCALE: 1 1/2" = 1'-0"

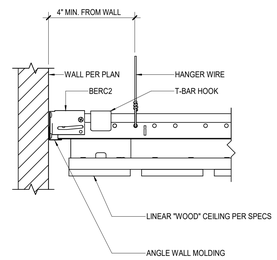

14 LINEAR CEILING AT WALL
SCALE: 3" = 1'-0"

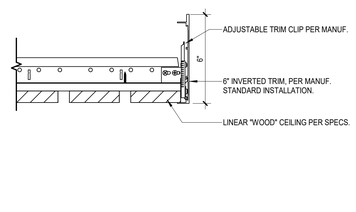

15 LINEAR CEILING - VERTICAL TRIM
SCALE: 3" = 1'-0"

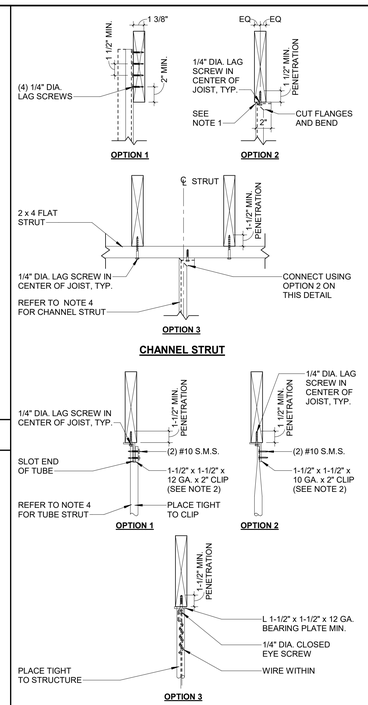

NOTE:

1. WEB OF CHANNEL TO BEAR WITHIN WIDTH OF WOOD MEMBER
2. VERTICAL LEG OF MEMBER TO FALL WITHIN THE WIDTH OF THE WOOD MEMBER
3. FOR ADDITIONAL INFORMATION REFER TO 7 / A9.5 Sim
4. FOR COMPRESSION STRUT TABLE REFER TO 11 / A9.4 Sim

10 STRUT TO TIMBER W/O GYP
SCALE: 1 1/2" = 1'-0"

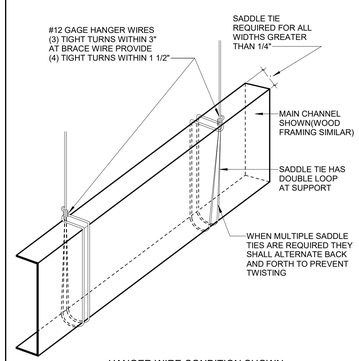

11 TYPICAL SADDLE TIE
SCALE: 3" = 1'-0"

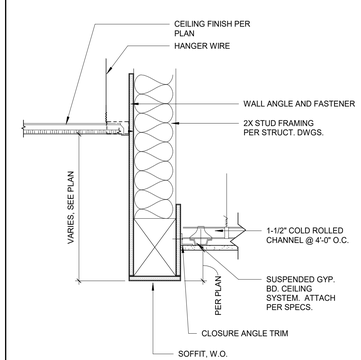

12 ACT - GB CEIL. TRANSITION
SCALE: 1 1/2" = 1'-0"

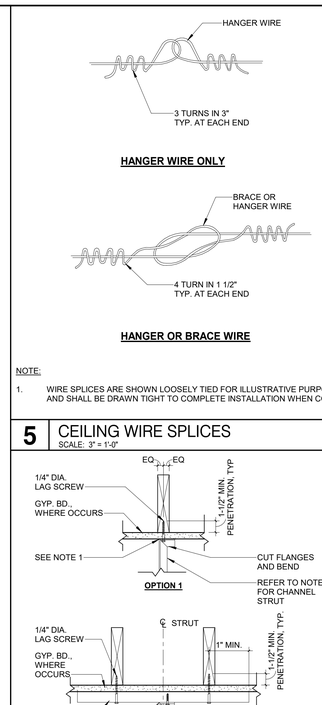

NOTE:

1. WIRE SPLICES ARE SHOWN LOOSELY TIED FOR ILLUSTRATIVE PURPOSES ONLY AND SHALL BE DRAWN TIGHT TO COMPLETE INSTALLATION WHEN CONSTRUCTED

5 CEILING WIRE SPLICES
SCALE: 3" = 1'-0"

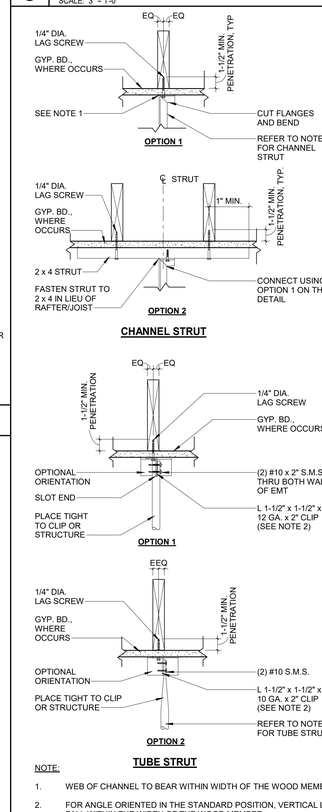

NOTE:

1. WEB OF CHANNEL TO BEAR WITHIN WIDTH OF THE WOOD MEMBER
2. FOR ANGLE ORIENTED IN THE STANDARD POSITION, VERTICAL LEG TO FALL WITHIN THE WIDTH OF THE WOOD MEMBER
3. FOR COMPRESSION STRUT TABLE REFER TO 11 / A9.4 Sim

7 STRUT TO TIMBER W/ GYP
SCALE: 1 1/2" = 1'-0"

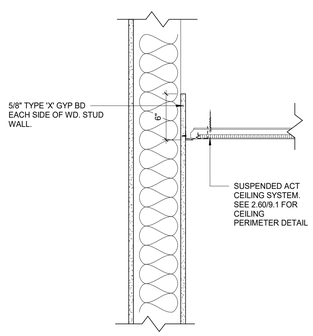

8 ACT CEILING PERIMETER
SCALE: 1 1/2" = 1'-0"

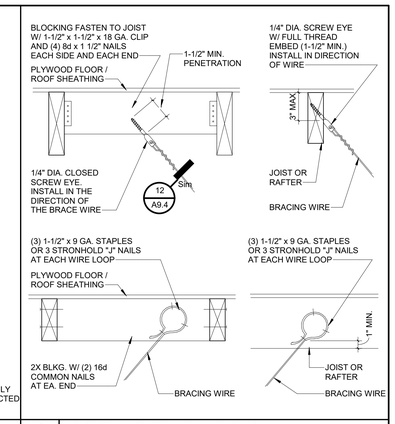

1 BRACE TO SAWN TIMBER
SCALE: 1 1/2" = 1'-0"

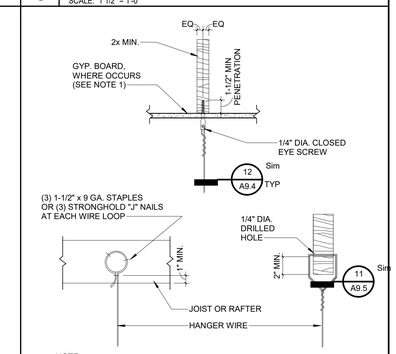

NOTE:

1. WHEN FIRE RATED GYP. BOARD IS INSTALLED ON THE BOTTOM FLANGES, USE SCREW EYES W/ SUFFICIENT LENGTH TO AVOID DAMAGING THE FIRE RATED GYP. BOARD AND MEET MIN. PENETRATION

2 HANGER TO SAWN TIMBER
SCALE: 1 1/2" = 1'-0"

STRUCTURAL CONDITION OF FLOOR / ROOF ABOVE COMPRESSION STRUT	APPLICABLE DETAIL
SAWN TIMBER WITH GYPSUM BOARD	5.50
SAWN TIMBER WITHOUT GYPSUM BOARD	5.60

3 COMPRESSION STRUT MATRIX
SCALE: 3" = 1'-0"

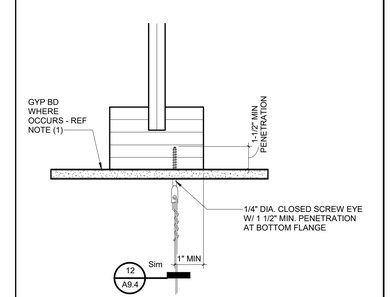

NOTE:

1. WHEN FIRE RATED GYP. BOARD IS INSTALLED ON THE BOTTOM FLANGES, USE SCREW EYES W. SUFFICIENT LENGTH TO AVOID DAMAGING THE FIRE RATED GYP. BOARD AND MEET MIN. PENETRATION.

4 HANGER TO WOOD I JOIST
SCALE: 3" = 1'-0"

PBK

ARCHITECT PBK Architects, Inc.
PBK.com
SAN LUIS OBISPO
408 Higuera Street, Ste 100
San Luis Obispo, CA 93401
805-329-3076

FIRE STATION #44
COASTSIDE FIRE PROTECTION DISTRICT

501 STETSON STREET
MOSS BEACH, CA 94038
PLAN CHECK 02 RESPONSE

BID SET

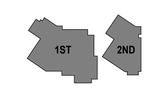

KEY PLAN
PLAN NORTH
TRUE NORTH

This document is for plan review only

CLIENT
COASTSIDE FIRE PROTECTION DISTRICT
PROJECT NUMBER 230137
DATE 03/13/2026
DRAWN BY: KF/OS CHKED BY: AD
REVISIONS

#	DESCRIPTION	DATE

SUSPENDED CEILING DETAILS

A9.5

5/29/2026 4:38:02 PM

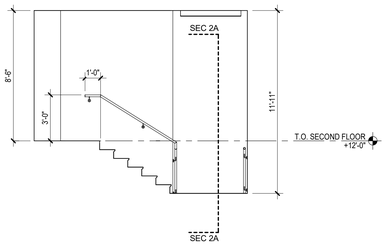

STAIRWAY 2 - SECTION 2B

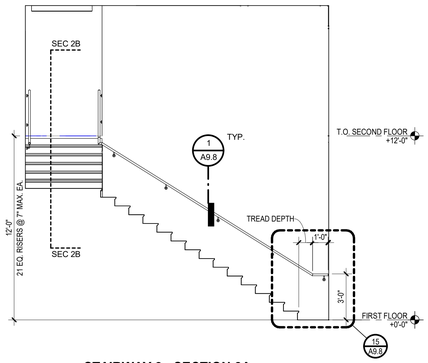

STAIRWAY 2 - SECTION 2A

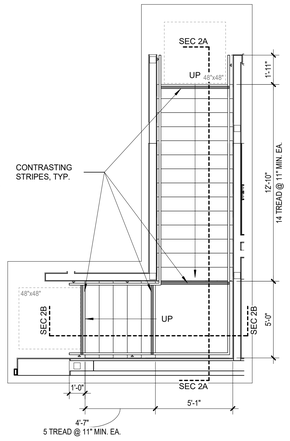

STAIRWAY 2 ENLARGED PLAN

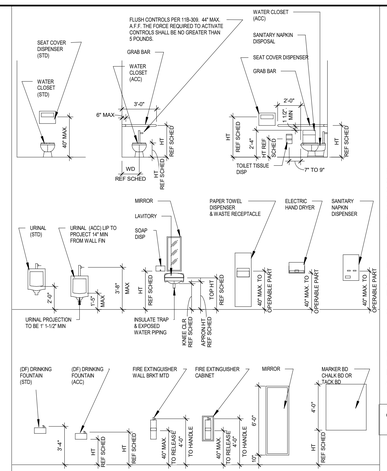

FIXTURE	SUGGESTED DIMENSION		
	A		
TOILET CENTER LINE FROM WALL	1' - 5" ~ 1' - 6"		
TOILET SEAT HEIGHT (TOP OF SEAT)	1' - 5" ~ 1' - 7"		
GRAB BAR HEIGHT (TOP OF BAR)	2' - 9" ~ 3' - 0"		
TOILET PAPER DISPENSER HT TO OUTLET	1' - 7" MIN		
NAPKIN DISPOSAL IN FRONT OF TOILET	1' - 0" MAX		
DISPENSER, TOWEL HOLDER, MIRROR HEIGHT	3' - 4" MAX		
LAVATORY/SINK TOP HEIGHT	2' - 10" MAX		
LAVATORY APRON CLEARANCE	2' - 5" MIN		
LAVATORY/SINK KNEE CLEARANCE	2' - 3" MIN		
DF BUBBLER HEIGHT	3' - 0" MAX		
DF BUBBLER FROM FRONT EDGE	5" MAX		
DF CONTROL FROM FRONT EDGE	6" MAX		
DF KNEE CLEARANCE	2' - 3" MIN		
RAMP/STAIR HANDRAIL HEIGHT	2' - 10" ~ 3' - 2"		
MARKER BOARD HEIGHT	3' - 2"		

NOTE

1. ALL FIXTURES AND ACCESSORIES ARE ACCESSIBLE UNLESS OTHERWISE NOTED OR DIMENSIONED.
2. THERE SHALL BE NO SHARP OR ABRASIVE SURFACES UNDER LAVATORIES.
3. SEE ENLARGED TOILET PLANS FOR TOILET ACCESSORY LOCATIONS.
4. ALL ACCESSORIES ARE TO BE ACCESSIBLE WITH A MAXIMUM REACH HEIGHT OF 3'-4" FROM FLOOR TO TOP OF FUNCTIONAL POINT UNLESS OTHERWISE NOTED OR DIMENSIONED. MIRROR HEIGHT IS TO BOTTOM OF REFLECTIVE SURFACE.

14 MOUNTING HT SCHEDULE
SCALE: 3/16" = 1'-0"

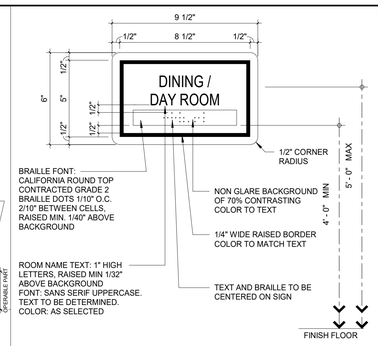

NOTE:
PROVIDE MECHANICAL MOUNTING W/ VANDAL RESISTANT FASTENERS. PROVIDE ADHESIVE MOUNTING SYSTEM WHEN ATTACHED TO GLAZING. REFER TO SIGNAGE SCHED FOR LOCATIONS

11 ROOM CONTROL SIGNAGE
SCALE: 3" = 1'-0"

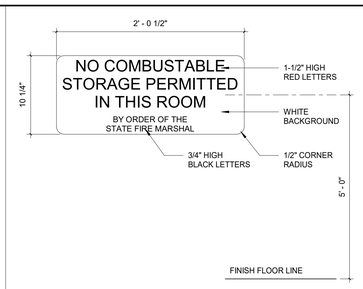

NOTE:

1. SIGN TO BE ACRYLIC PLASTIC W/ HELVETICA MEDIUM LETTERS
2. REFER TO SIGNAGE SCHED FOR LOCATIONS
3. ATTACH SIGN USING FLATHEAD VANDAL RESISTANT COUNTERSUNK SCREWS AND ADHESIVE

7 STORAGE SIGN
SCALE: 1 1/2" = 1'-0"

RESTROOM

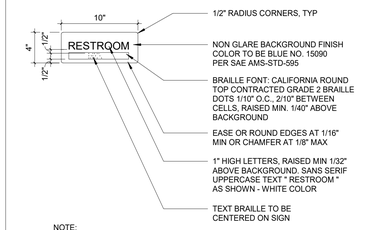

NOTE:
ATTACH SIGNS USING FLATHEAD VANDAL RESISTANT COUNTERSUNK SCREWS AND ADHESIVE. SIGNS SHALL BE MOUNTED 5' - 0" MAX ABOVE FINISH FLOOR LINE TO THE BOTTOM OF THE LETTERS AND 4' - 0" MINIMUM ABOVE FINISH FLOOR LINE TO THE BOTTOM OF THE BRAILLE. MOUNT SIGN ON STRIKE SIDE OF DOOR. REFER TO SIGNAGE SCHEDULE FOR LOCATIONS

1 WALL MTD RESTRM SIGN
SCALE: 1 1/2" = 1'-0"

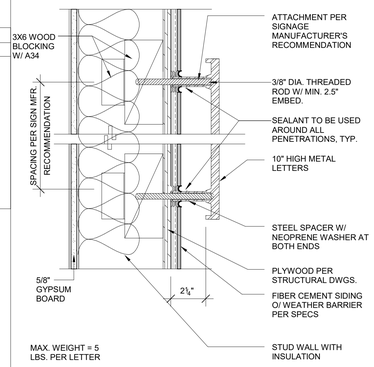

13 BUILDING SIGNAGE
SCALE: 3" = 1'-0"

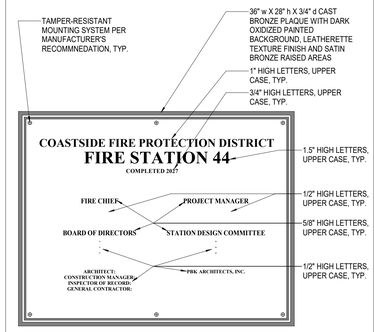

NOTE:
TYPE STYLE TO BE TIMES NEW ROMAN BOLD. VERIFY ALL NAMES WITH ARCHITECT PRIOR TO FABRICATION

8 DEDICATION PLAQUE
SCALE: 1 1/2" = 1'-0"

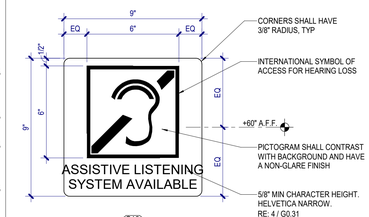

NOTES:
1. SIGN MATERIAL SHALL BE 1/4" THICK PLASTIC W/ 1/32" RAISED LETTERS
2. MOUNT W/ VANDAL RESISTANT FASTENERS

2 ASSISTIVE LISTENING SIGNAGE
SCALE: 3" = 1'-0"

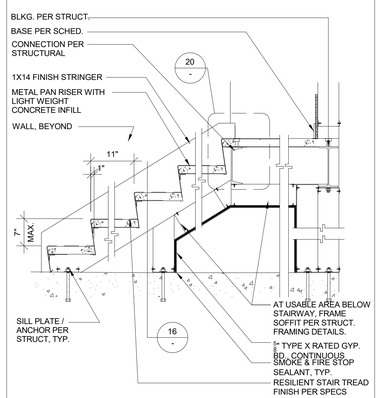

19 STAIRS SECTION
SCALE: 3/4" = 1'-0"

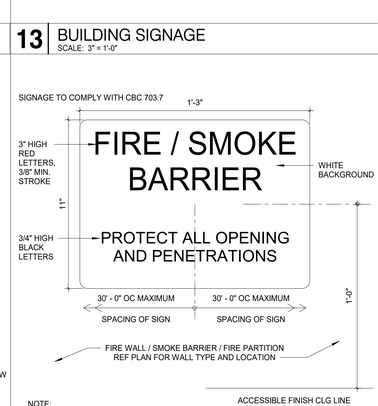

NOTE:

1. SIGN TO BE VINYL W/ SELF ADHERING BACKING SHEET
2. REFER TO SIGNAGE SCHED FOR LOCATIONS
3. FOR LOCATIONS W/OUT CEILING, MOUNT SIGN 12" BELOW UNDERSIDE OF EXPOSED ROOF / FLOOR DECK
4. MARKING SHALL BE LOCATED 15 FEET OF THE END OF EACH WALL MEASURED HORIZONTALLY ALONG THE WALL OR PARTITION.

15 FIRE WALL SIGN
SCALE: 3" = 1'-0"

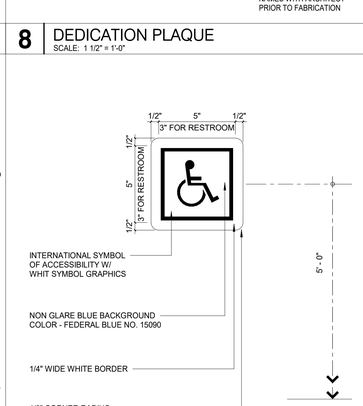

NOTE: PROVIDE MECHANICAL MOUNTING W/ VANDAL RESISTANT FASTNERS. PROVIDE ADHESIVE MOUNTING SYSTEM WHEN ATTACHED TO GLAZING. REFER TO SIGNAGE SCHED FOR LOCATIONS

9 ACCESSIBLE ENTRY SIGN
SCALE: 3" = 1'-0"

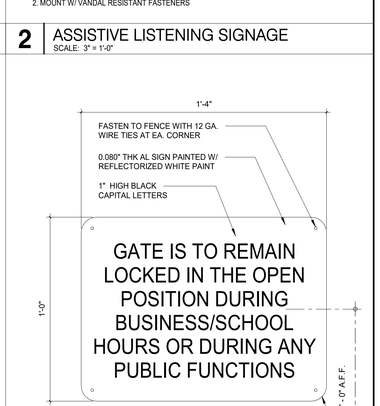

3 GATE ACCESS SIGNAGE
SCALE: 3" = 1'-0"

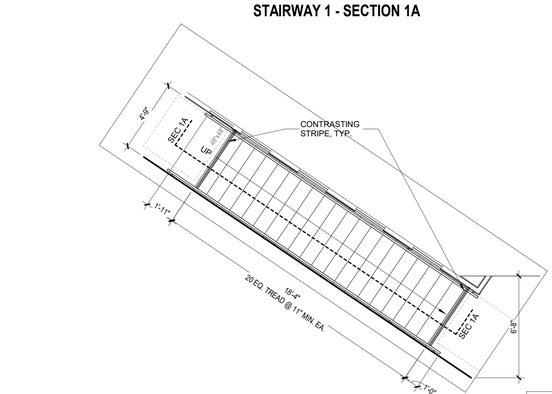

STAIRWAY 1 ENLARGED PLAN

STAIR NOTES:

1. STAIR STRUCTURAL DESIGN AND ENGINEERING TO BE DEFERRED SUBMITTAL, SEE NOTE #32 ON G0.00.
2. ALL HANDRAILS TO COMPLY W/ CBC SEC. 1607A.9.1, TO RESIST A LINEAR LOAD OF 50 LB PER LINEAL FOOT & 1607A.9.1.1, SHALL BE DESIGNED TO RESIST A CONCENTRATED LOAD OF 200 LBS.

21 STAIR #1 & STAIR #2 PLANS AND SECTIONS
SCALE: 1/4" = 1'-0"

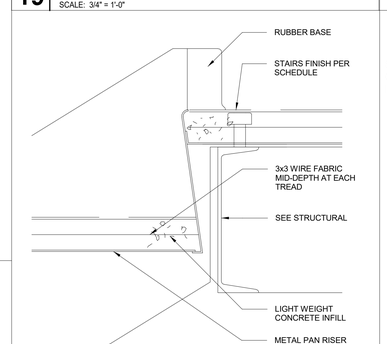

20 STAIRS DETAIL
SCALE: 3" = 1'-0"

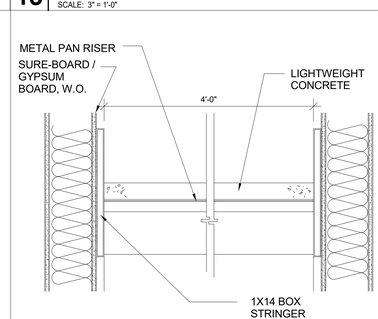

16 STAIRS SECTION 2
SCALE: 1 1/2" = 1'-0"

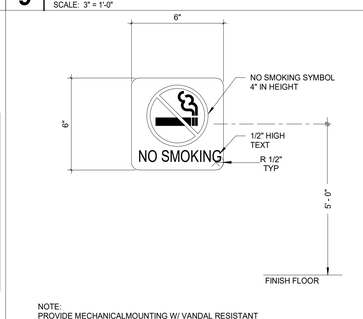

NOTE:
PROVIDE MECHANICALMOUNTING W/ VANDAL RESISTANT FASTNERS. PROVIDE ADHESIVE MOUNTING SYSTEM WHEN ATTACHED TO GLAZING.
REFER TO SIGNAGE SCHED FOR LOCATIONS

10 NO SMOKING SYMBOL
SCALE: 3" = 1'-0"

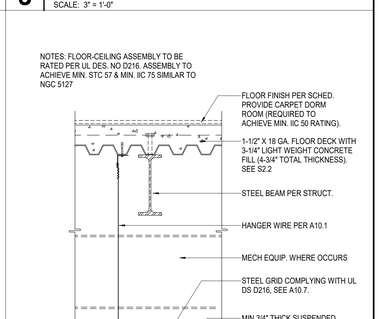

4 FLOOR-CEILING ASSEMBLY
SCALE: 1 1/2" = 1'-0"

PBK
ARCHITECT PBK Architects, Inc.
PBK.com
SAN LUIS OBISPO
408 Higuera Street, Ste 100
San Luis Obispo, CA 93401
805-329-3076

FIRE STATION #44
COASTSIDE FIRE PROTECTION DISTRICT

501 STETSON STREET
MOSS BEACH, CA 94038
PLAN CHECK 02 RESPONSE

BID SET

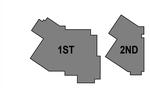

KEY PLAN
PLAN NORTH
TRUE NORTH

CLIENT
COASTSIDE FIRE PROTECTION DISTRICT
PROJECT NUMBER
230137
DATE 03/13/2026
DRAWN BY: KF/OS CHKED BY: AD

REVISIONS

#	DESCRIPTION	DATE

This document is for plan review only

SPECIALTY DETAILS

A9.6

5/29/2026 4:38:06 PM

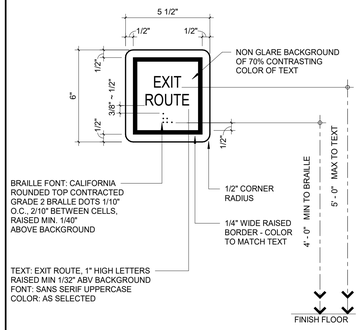

NOTE: PROVIDE MECHANICALMOUNTING W/ VANDAL RESISTANT FASTNERS. PROVIDE ADHESIVE MOUNTING SYSTEM WHEN ATTACHED TO GLAZING. REFER TO SIGNAGE SCHED FOR LOCATIONS

16 TACTILE EXIT SIGN
SCALE: 3" = 1'-0"

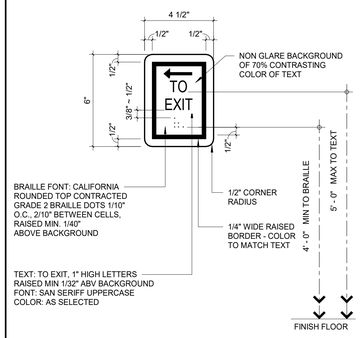

NOTE: PROVIDE MECHANICALMOUNTING W/ VANDAL RESISTANT FASTNERS. PROVIDE ADHESIVE MOUNTING SYSTEM WHEN ATTACHED TO GLAZING. REFER TO SIGNAGE SCHED FOR LOCATIONS

17 TACTILE EXIT SIGN
SCALE: 3" = 1'-0"

REF CBC TABLE 11B-703.3.1 BRAILLE DIMENSIONS

MEASUREMENT RANGE	MINIMUM AND MAXIMUM IN INCHES
BASE DOT DIAMETER	0.059 TO 0.063
DISTANCE BETWEEN 2 DOTS IN THE SAME CELL *	0.100
DISTANCE BETWEEN CORRESPONDING DOTS IN ADJACENT CELLS *	0.300
DOT HEIGHT	0.025 TO 0.037
DISTANCE BETWEEN CORRESPONDING DOTS FROM 1 CELL DIRECTLY BELOW *	0.395 TO .400
* MEASUREMENT IS CENTER TO CENTER OF DOT	

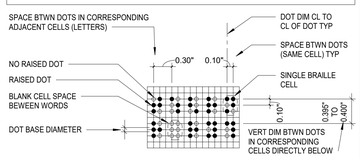

GENERAL NOTE:
1. CALIFORNIA CONTRACTED GRADE 2 BRAILLE SHALL BE USED WHERE EVER BRAILLE IS REQUIRED.
INDIVIDUAL BRAILLE DOTS SHALL EACH BE DISTINCT AND SEPARATE. EACH DOT SHALL BE ROUNDED OR DOMED IN LIEU OF SQUARE SIDED AND FLAT TOPPED. DOT SHALL BE 0.059" TO 0.063" DIA. X 0.025" TO 0.037" HIGH. REF CBC 11B-703.3, 11B-703.3.1 & 11B-703.4.

13 BRAILLE TEMPLATE
SCALE: 12" = 1'-0"

NOT USED

SIGNAGE SCHEDULE

ITEM DESCRIPTION	DETAIL	LOCATION	REMARKS
FEMALE RESTROOM DOOR SYMBOL	- / ---	ALL FEMALE RESTROOM DOORS	1
MALE RESTROOM DOOR SYMBOL	- / ---	ALL MALE RESTROOM DOORS	1
RESTROOM DOOR SYMBOL	6 / A9.7	ALL SINGLE USE RESTROOM DOORS	1
MALE RESTROOM WALL SIGN	- / ---	ALL MALE RESTROOMS	1, 2
FEMALE RESTROOM WALL SIGN	- / ---	ALL FEMALE RESTROOMS	1, 2
RESTROOM WALL SIGN	1 / A9.6	ALL SINGLE USE RESTROOMS	1, 2
ACCESSIBLE ENTRY SIGN	9 / A9.6	ALL MAIN EXTERIOR BUILDING ENTRIES	1
TACTILE EXIT SIGN (EXTERIOR EXIT)	15 / A9.7	EXTERIOR EXIT DOORS	1, 2, 3
TACTILE EXIT SIGN (CORRIDOR OR HALLWAY)	16 / A9.7	CORRIDOR AND HALLWAY EXIT DOORS	1, 2, 3
TACTILE EXIT SIGN (HORIZONTAL EXIT)	17 / A9.7	AT HORIZONTAL EXIT DOORS	1, 2
TACTILE EXIT SIGN (RAMP OR STAIRWAY)	19 / A10.4	ALL EXIT RAMPS AND STAIRS	1, 2
ROOM IDENTIFICATION SIGNAGE	11 / A9.6	ALL INTERIOR & EXTERIOR ROOMS	1, 2
NO SMOKING SIGN	10 / A9.6	ALL MAIN EXTERIOR BUILDING ENTRIES	-
GATE ACCESS SIGN	3 / A9.6	ALL EXTERIOR EXIT GATES	-
ACCESSIBLE PARKING SIGN	23 / A1.2	ALL ACCESSIBLE AUTO PARKING STALLS	-
ACCESSIBLE VAN PARKING SIGN	23 / A1.2	ALL ACCESSIBLE VAN PARKING STALLS	-
ACCESSIBLE PARKING LOT SIGN	13 / A1.2	ALL ACCESSIBLE PARKING LOT ENTRIES	-
ACCESSIBLE SYMBOL	2 / A1.2	ALL ACCESSIBLE PARKING STALLS	-
ROOM CAPACITY SIGN	14 / A9.7	REFER TO DETAIL FOR ROOM LOCATIONS	-
STAIRWAY SIGNAGE	- / ---	ALL FLOOR LEVELS OF STAIRWAYS	2
FIRE WALL BARRIER IDENTIFICATION SIGN	15 / A9.6	ALL FIRE AND SMOKE BARRIER WALLS	-
STORAGE ROOM SIGN	7 / A9.6	ALL ELEVATOR MACHINE ROOMS	-
ELEVATOR SIGNAGE	7 / A9.6	ALL ELEVATOR LANDINGS	3

REMARKS

1. REF DET. 11 / - FOR MOUNTING
2. REF DET. 13 / - AND 18 / - FOR SIGNAGE AND BRAILLE TEMPLATE
3. REF DET. 1 / - FOR LOCATION AT ELEVATOR LANDING

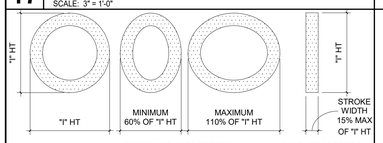

WIDTH TO HEIGHT PROPORTION TEMPLATE

TACTILE TEXT TEMPLATE PER (CBC) CALIFORNIA BUILDING CODE (CCR) CALIFORNIA CODE OF REGULATIONS, TITLE 24, PART 2, SECTION 11B-703

GENERAL NOTES:
1. FINISH AND CONTRAST: CHARACTERS AND THEIR FINISH SHALL BE NON GLARE. CHARACTERS SHALL CONTRAST WITH THEIR BACKGROUND WITH EITHER LIGHT CHARACTERS ON A DARK BACKRGROUND OR DARK CHARACTERS ON A LIGHT BACKGROUND. REF CBC 11B-703.5.1.

2. PROPORTIONS: CHARACTERS SHALL HAVE A FONT WHERE THE WIDTH OF THE UPPER CASE LETTER "O" IS 60% MINIMUM AND 110% MAXIMUM OF THE UPPER CASE LETTER "I". STROKE THICKNESS SHALL BE 15% MAXIMUM OF THE THICKNESS OF THE UPEPRCASE "I" AS INDICATED ABOVE. REF CBC SECTION 11B-703.2.4. AND 11B-703.2.6.

3. TACTILE FONT: SHALL BE UPPER CASE SAN SERIF & BE RAISED A MINIMUM OF 1/32". FONT SHALL BE DUPLICATED IN BRAILLE. REF CBC 11B-703.2.3.

4. HEIGHT: FONT SHALL BE 5/8" MINIMUM AND 2" MAXIMUM BASED UPON HEIGHT OF THE UPPERCASE "I". REF CBC 11B-703.2.5 AND TABLE 11B-703.5.5.

5. CHARACTER SPACING: MIN OF 1/8" AND MAX OF 4 TIMES CHARACTER STROKE WIDTH MEASURED BETWEEN CLOSEST POINTS OF ADJACENT LETTERS AND SHALL BE SEPERATED FROM RAISED BORDERS AND DECORATIVE ELEMENTS 3/8" MINIMUM. REF CBC SECTION 11B-703.2.7.

6. LINE SPACING: MIN OF 135% AND MAX OF 170% OF THE UPPERCASE "I" HEIGHT MEASURED BASELINE TO BASELINE OF CHARACTERS. TEXT SHALL BE HORIZONTAL FORMAT. REF CBC 11B-703.2.8.

18 SIGNAGE TEMPLATE
SCALE: 1 : 1

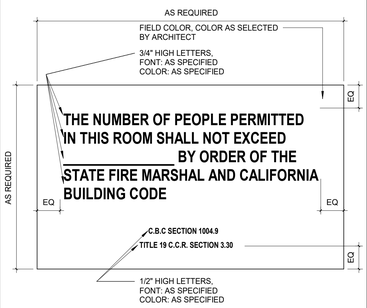

NOTE:
1. LOCATE SIGN ABOVE DOOR 115B ON THE EAST WALL OF TRAINING CLASSROOM 115. MOUNT SIGN 12" ABOVE DOOR.

14 RM CAPACITY SIGN DET
SCALE: 6" = 1'-0"

NOTE: AT ALL DOUBLE DOORS LOCATE SIGNAGE ADJACENT TO JAMB OF INACTIVE LEAF OF DOOR PAIR. PROVIDE 90 DEGREE INHIBITOR TYPE CLOSER ON INACTIVE DOOR.

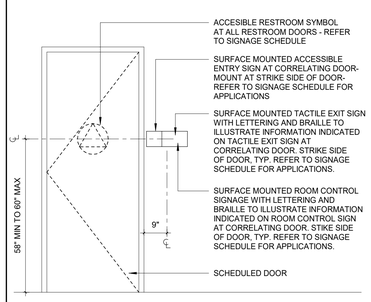

11 SIGNAGE MOUNTING DETAIL
SCALE: 1/2" = 1'-0"

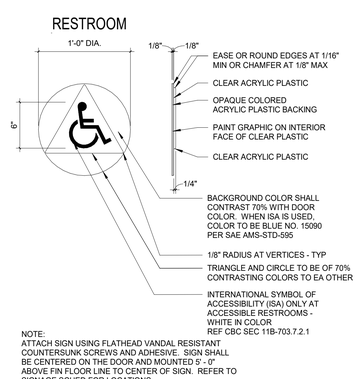

NOTE:
ATTACH SIGN USING FLATHEAD VANDAL RESISTANT COUNTERSUNK SCREWS AND ADHESIVE. SIGN SHALL BE CENTERED ON THE DOOR AND MOUNTED 5' - 0" ABOVE FIN FLOOR LINE TO CENTER OF SIGN. REFER TO SIGNAGE SCHED FOR LOCATIONS

6 RESTROOM SYMBOL
SCALE: 1 1/2" = 1'-0"

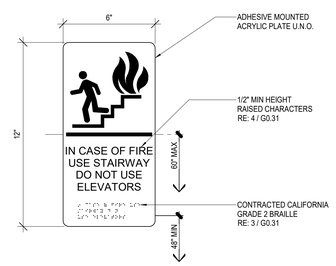

NOTE:
1. PROVIDE ONE SIGN AT EACH LANDING

2 EMERGENCY EXITING SIGN
SCALE: 3" = 1'-0"

NOTE: SIGNAGE SHALL OCCUR AT ALL ELEVATOR LANDINGS EXCEPT AT THE MAIN GROUND FLOOR LANDING.

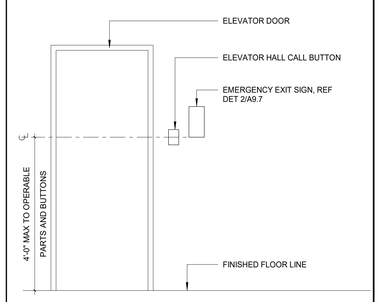

1 ELEVATOR SIGNAGE DETAIL
SCALE: 1/2" = 1'-0"

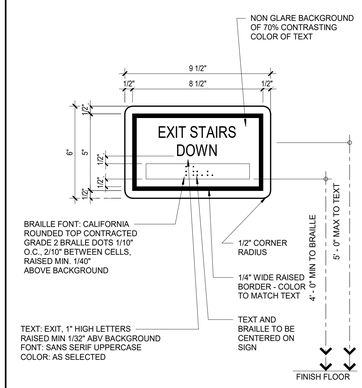

NOTE: PROVIDE MECHANICALMOUNTING W/ VANDAL RESISTANT FASTNERS. PROVIDE ADHESIVE MOUNTING SYSTEM WHEN ATTACHED TO GLAZING. REFER TO SIGNAGE SCHED FOR LOCATIONS

10 TACTILE EXIT SIGN
SCALE: 3" = 1'-0"

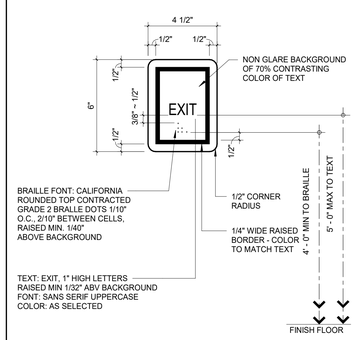

NOTE: PROVIDE MECHANICALMOUNTING W/ VANDAL RESISTANT FASTNERS. PROVIDE ADHESIVE MOUNTING SYSTEM WHEN ATTACHED TO GLAZING. REFER TO SIGNAGE SCHED FOR LOCATIONS

15 TACTILE EXIT SIGN
SCALE: 3" = 1'-0"

PBK
ARCHITECT PBK Architects, Inc.
PBK.com
SAN LUIS OBISPO
408 Higuera Street, Ste 100
San Luis Obispo, CA 93401
805-329-3076

FIRE STATION #44
COASTSIDE FIRE PROTECTION DISTRICT

501 STETSON STREET
MOSS BEACH, CA 94038
PLAN CHECK 02 RESPONSE

BID SET

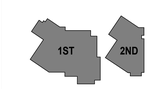

KEY PLAN
PLAN NORTH
TRUE NORTH

CLIENT
COASTSIDE FIRE
PROTECTION DISTRICT
PROJECT NUMBER
230137
DATE 03/13/2026
DRAWN BY: KF/OS CHKED BY: AD
REVISIONS

#	DESCRIPTION	DATE

This document is for plan review only

SPECIALTY DETAILS

A9.7

5/29/2026 4:38:08 PM

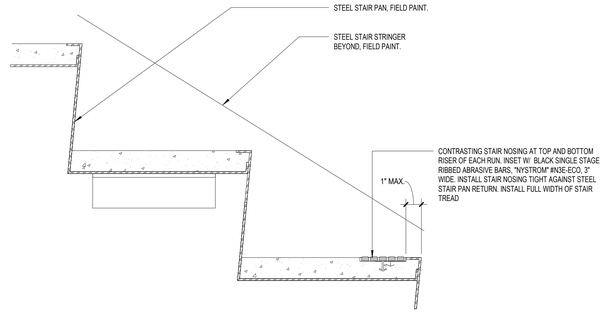

16 STAIR NOSING
SCALE: 3" = 1'-0"

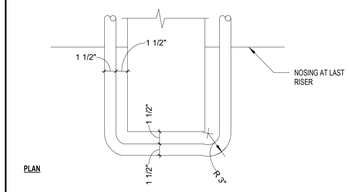

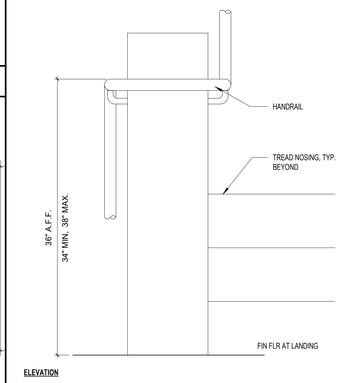

7 STAIR HANDRAIL AT SWITCHBACK
SCALE: 1 1/2" = 1'-0"

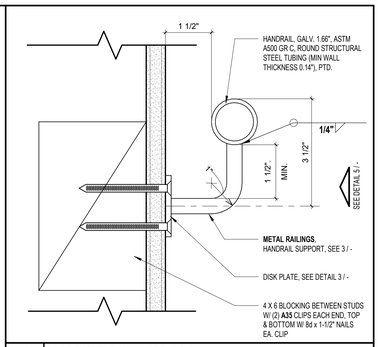

1 HANDRAIL @ WALL
SCALE: 6" = 1'-0"

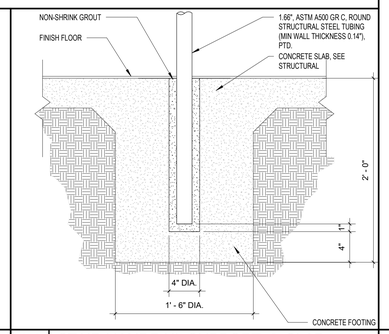

12 STAIR HANDRAIL SUPPORT @ SLAB
SCALE: 1 1/2" = 1'-0"

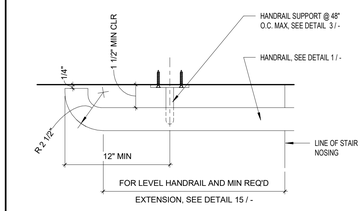

2 HANDRAIL END CONDITION
SCALE: 3" = 1'-0"

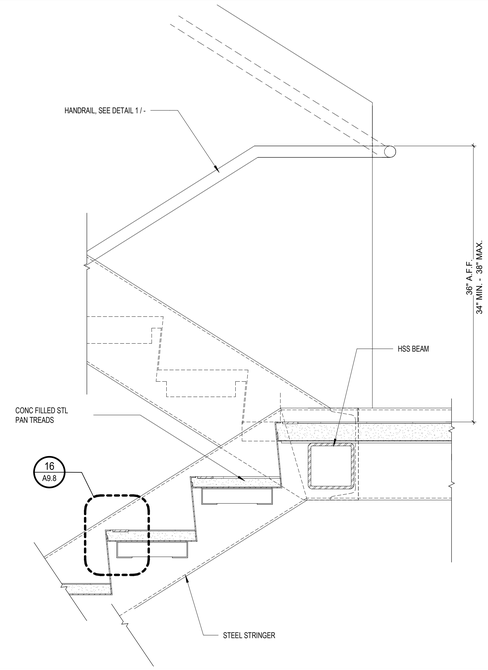

14 METAL STAIR INTERMEDIATE LANDING
SCALE: 1 1/2" = 1'-0"

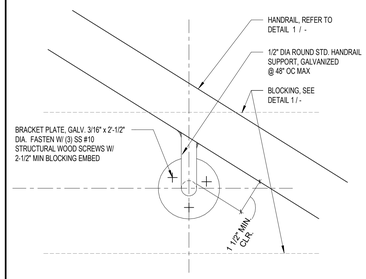

3 HANDRAIL BRACKET AT WALL
SCALE: 6" = 1'-0"

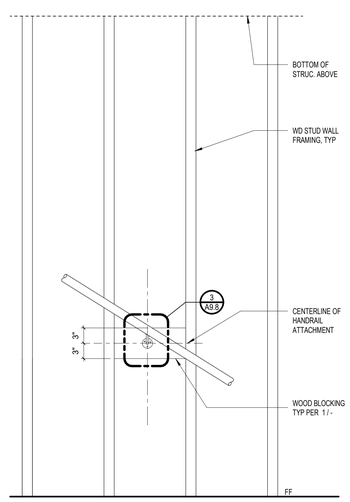

NOTES:
1. **WALL FRAMING PER PARTITION TYPE, REFER TO DIMENSION PLAN.**
2. **WALL STUDS ARE TO BE CONTINUOUS FROM FLOOR TO STRUCTURE ABOVE.**
3. **ANCHOR BLOCKING PER DETAIL 1 / - .**

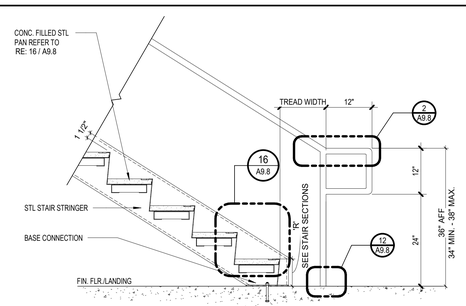

15 METAL STAIR BASE
SCALE: 3/4" = 1'-0"

5 BACKING AT HANDRAIL
SCALE: 1" = 1'-0"

PBK

ARCHITECT PBK Architects, Inc.
PBK.com
SAN LUIS OBISPO
408 Higuera Street, Ste 100
San Luis Obispo, CA 93401
805-329-3076

FIRE STATION #44
COASTSIDE FIRE PROTECTION DISTRICT

501 STETSON STREET
MOSS BEACH, CA 94038
PLAN CHECK 02 RESPONSE

BID SET

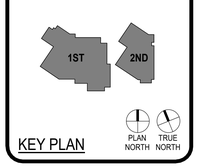

KEY PLAN

CLIENT
COASTSIDE FIRE PROTECTION DISTRICT
PROJECT NUMBER
230137
DATE 03/13/2026
DRAWN BY: KF/OS CHKED BY: AD
REVISIONS

#	DESCRIPTION	DATE

This document is for plan review only

STAIR DETAILS

A9.8

5/29/2026 4:38:10 PM

A10.1 - FLOOR FINISH PLAN & SCHEDULE

FIRST FLOOR FINISH SCHEDULE

ROOM NUM	ROOM NAME	FLOOR	BASE	WALL FINISH NORTH WALL	WALL FINISH EAST WALL	WALL FINISH SOUTH WALL	WALL FINISH WEST WALL	CEILING FINISH	PAINT FINISH	REMARKS
101	LOBBY	PC/WO-1	RB-1	P-1	P-4	P-1	P-1	WF-1	ESPT	C
102	RR 1	PT-1	PT-2	PT-2/P-1	PT-2/P-1	PT-2/P-1	PT-2/P-1	P-5	SGPT	F, G, H
103	CAPT. OFFICE	CPT-1	RB-1	P-1	P-1	P-1	P-1	P-5	ESPT	
104	OFFICE	CPT-1	RB-1	P-1	P-1	P-1	P-1	ACT	ESPT	
105	ELEV.	RF-2	RB-1	PF	PF	PF	PF	PF	-	
106	FITNESS	RF-1	RB-2	P-1/MIRROR	P-1	P-1/MIRROR	P-1	ACT	SGPT	B, I, N
107	STAIRWAY 1	RF-3	RB-1	P-1	P-1	P-1	P-1	P-5	SGPT	
108	RR 2	PT-1	PT-2	PT-2/P-1	PT-2/P-1	PT-2/P-1	PT-1/P-1	P-5	SGPT	A, B, F, G, H
109	ELECT	SC	CB	P-1	P-1	P-1	P-1	P-5	SGPT	
110	HALLWAY	PC	RB-1	P-1	P-1	P-1	P-1	ACT	ESPT	
111	CUST	SC	RB-1	FRP/P-1	FRP/P-1	P-1	P-1	OPEN	-	D
112	ELEV. MACH.	SC	RB-1	P-1	P-1	P-1	P-1	OPEN		
113	STOR	PC	RB-1	P-1	P-1	P-1	P-1	OPEN	-	
114	TELECOM	PC	RB-1	P-1	P-1	P-1	P-1	OPEN	-	
115	TRAINING CLASSROOM	CPT-1	RB-1	P-1	P-1	P-1	P-1	WF-1/P-6	ESPT/FPT	B, C, O, P, U
116	APPARATUS BAY	PC	MB-1	P-1	P-1	P-1	P-1	P-5	SGPT	J, K
117	YARD ST	SC	CB	P-1	P-1	P-1	P-1	OPEN	-	
118	DECON	PC	MB-1	FRP/P-1	SS/FRP/P-1	FRP/P-1	FRP/P-1	FRP/P-5	SGPT	D, E
119	EMS STOR	PC	MB-1	P-1	P-1	P-1	P-1	P-5	SGPT	
120	TURNOUT	PC	MB-1	P-1	P-1	P-1	P-1	P-5	SGPT	Q
121	COMP	PC	MB-1	P-1	P-1	P-1	P-1	P-5	SGPT	
122	SHOP	PC	MB-1	P-1/PEG	P-1/PEG	P-1	P-1	P-5	SGPT	J, K, R
123	HOSE DRY STOR	PC	MB-1	P-1	P-1	P-1	P-1	P-5	SGPT	
124	FIRE RISER	SC	CB	P-1	P-1	P-1	P-1	OPEN	-	
125	VESTIBULE	PC	RB-1	P-1	P-1	P-1	P-1	OPEN	-	

SECOND FLOOR FINISH SCHEDULE

ROOM NUM	ROOM NAME	FLOOR	BASE	WALL FINISH NORTH WALL	WALL FINISH EAST WALL	WALL FINISH SOUTH WALL	WALL FINISH WEST WALL	CEILING FINISH	PAINT FINISH	REMARKS
201	BAT. CHIEF DORM	PC/RR	RB-1	P-1	P-1	P-1	P-2	ACT	ESPT	
202	BALCONY	DCS	-	-	-	-	-			L
203	BC RR	PT-1/PT-3	PT-2/MB-1	PT-2/P-1	PT-2/P-1	PT-2/P-1	PT-2/P-1	P-5	SGPT	F, G, H, S
204	DORM 1	PC/RR	RB-1	P-1	P-1	P-1	P-2	ACT	ESPT	
205	RR	PT-1/PT-3	PT-2/MB-1	PT-2/P-1	PT-2/P-1	PT-2/P-1	PT-2/P-1	P-5	SGPT	F, G, H, S
206	ELEV	RF-2	RB-1	PF	PF	PF	PF	PF	-	
207	CAPTAIN RR	PT-1/PT-3	PC-2/P-1	PC-2/P-1	PC-2/P-1	PC-2/P-1	PC-2/P-1	P-5	SGPT	F, G, H, S
208	BALCONY	DCS	-	-	-	-	-	-	-	L
209	CAPTAIN DORM	PC/RR	P-1	P-1	P-1	P-2	P-1	ACT	ESPT	
210	DORM 2	PC/RR	P-1	P-1	P-1	P-1	P-2	ACT	ESPT	
211	DORM 3	PC/RR	P-1	P-1	P-1	P-1	P-2	ACT	ESPT	
212	LAUNDRY	PC	P-1	P-1	FRP-1/P-1	FRP-1/P-1	P-1	P-5	SGPT	
213	HALLWAY	PC	P-1	P-1	P-1	P-1	P-1	ACT	ESPT	
214	ACCESSIBLE RR	PT-1/PT-3	PT-2/MB-1	PT-2/P-1	PT-2/P-1	PT-2/P-1	PT-2/P-1	PT-2/P-5	SGPT	F, G, H, S
215	VEST	PC	RB-1	P-1	P-1	P-1	P-1	OPEN	-	
216	STOR 3	PC	RB-1	P-1	P-1	P-1	P-1	OPEN	-	
217	PANTRY	PC	RB-1	P-1	P-1	P-1	P-1	P-5	SGPT	
218	KITCHEN	PC	RB-1	P-1/CT-1	P-1/CT-1	P-1	P-1	P-6/WF-1	ESPT/FPT	B, C, M, H, U
219	DINING	PC	RB-1	P-1	P-1	P-1	P-1	OPEN, P-6	FPT	C, U
220	DAYROOM	PC	RB-1	P-1	P-1	P-1	P-1	P-6/WF-1	ESPT/FPT	A, C, U
221	DECK	DCS	-	-	-	-	-	-	-	L
222	SLIDE POLE DECK	EP	RB-1	P-1	P-1	P-1	P-1	P-5	SGPT	

MAT. / FIN. ABBREVIATIONS
P = PAINTED
ESPT = EGG SHELL PAINT
SGPT = SEMI-GLOSS PAINT
FPT = FLAT PAINT
ACT = ACOUSTICAL CEILING TILE
FRP = FIBER REINFORCED PANELS
SC = SEALED CONCRETE
PC = POLISHED CONCRETE
DCS = DECK COVERING SYSTEM
PT = PORCELAIN TILE
CT = CERAMIC TILE
RF = RUBBER COVERING
CPT= CARPET TILE
WO = WALK OFF MAT
EP = EPOXY
RB = RUBBER BASE
MB = METAL BASE
CB = CONCRETE BASE
AWP = ACOUSTIC WOOD PANEL
SS = STAINLESS STEEL
PF= PREFABRICATED WALLS AND CEILING
RR= RUNNER RUG

FINISH SCHEDULE REMARKS

A. REFER TO FLOOR FINISH PLANS
B. REFER TO INTERIOR ELEVATIONS
C. REFER TO CEILING PLANS
D. FRP WAINSCOT - SEE INTERIOR ELEVATIONS FOR HEIGHTS AND LOCATIONS
E. STAINLESS STEEL AT TOP OF SINK TO BOTTOM OF CASEWORK
F. 84" PORCELAIN TILE WAINCSOT
G. STAINLESS STEEL COVE BASE TRIM (MT-1)
H. STAINLESS STEEL FINISHING AND EDGE PROTECTING TRIM (MT-2)
I. MIRRORS - SEE SPEC
J. METAL BASE AT CASEWORK
K. QUARRY TILE BASE AT WALLS
L. DEX-O-TEX FINISH ON SEALED CONCRETE - SEE SPEC
M. PROVIDE FULL HEIGHT TILE BACKSPLASH BETWEEN UPPER AND LOWER CASEWORK PER ELEVATIONS
N. 18" RUBBER BASE (RB-2)
O. MARKERBOARD - SEE SPEC
P. TV MOUNT (N.I.C.) OR DIGITAL MARKERBOARD (N.I.C.) - SEE SPEC
Q. WALL MOUNTED LOCKERS - SEE SPEC
R. PEG BOARD AND PEG BOARD BACKSPLASH - SEE SPEC
S. RESTROOM SHOWERS TO HAVE TILE ON WALLS (FULL HEIGHT) AND CEILINGS, SEE FINISH AND MATERIAL SCHEDULES.
T. PROVIDE PAINTED STUCCO CEILINGS AT COVERED PATIO AREA PER REFLECTED CEILING PLAN.
U. PAINT ALL EXPOSED CEILING-RELATED ITEMS FLAT BLACK **P-6**, INCLUDING BUT NOT LIMITED TO, STRUCT. MEMBERS, STRUCT. DECK, DUCTWORK, DIFFUSERS, PIPING, CONDUIT, EQUIP. HOUSINGS, LIGHT FIXTURE HOUSINGS, CABLE SUPPORTS, CABLE TRAYS, EQUIP. SUPPORTS, HANGERS

MATERIAL SCHEDULE

ITEM	DESCRIPTION	MANUFACTURER	SERIES	COLOR	SIZE	SPEC. SEC.	REMARKS
ACT-1	ACOUSTICAL CEILING TILE, TYPE 1	ARMSTRONG	ULTIMA	WHITE	2' X 4'	09 51 13	
AR-1	AREA RUGS	INTERFACE	ICE BREAKER	105771 GRANITE	20" X 20"	09 68 13	TACTILE INSTALLATION SYSTEM. SEE FLOOR FINISH PLANS FOR SIZES.
AWP-1	WOOD VENEER CEILING PANEL, TYPE 1	ARMSTRONG	WOODWORKS LINEAR VENEERED PANELS	PLAIN SLICE WALLNUT (NWN)	NOMINAL 6" PLANKS		ADD MATCHING TRIM TO EXPOSED AREAS.
CPT-1	CARPET TILE, TYPE 1	INTERFACE	ICE BREAKER	105771 GRANITE	20" X 20"	09 68 13	INSTALLATON: NON DIRECTIONAL
CS-1	CONCRETE FLOORING, SEALED						
CT-1	CERAMIC TILE	ARIZONA TILE	PALOMA LONG HEX	COTTON. MAPEI GROUT - 02 PEWTER	4X8 POLISHED. 9MM THICK	09 30 12	BACKSPLASH TILE
DCS	DECK COVERING SYSTEM	DEX-O-TEX	WEATHERWARE	4413 DOLPHIN GRAY		11 90 00	DECK AND BALCONY FLOOR SYSTEM
FRP-1	FIBERGLASS REINFORCED PANELS	MARLITE	STANDARD FRP - CLASS C	PEBBLED - BRIGHT WHITE	4' X 8'	09 77 33	SEE ELEVATIONS FOR HEIGHTS. SEE DETAILS 16,21/A10.2
MC-1	METAL COUNTERTOPS			STAINLESS STEEL		06 41 16	
MCG-1	METAL CORNER GUARDS, TYPE 1	INPRO		STAINLESS STEEL	1-1/2" 90 DEGREE WINGS	11 90 00	
MT-1	METAL FINISH TRIM, TYPE 1	SCHLUTER	DILEX-HKS COVE	STAINLESS STEEL/CLASSIC GREY	HKSV24U10/O11GS	09 30 15	
MT-2	METAL FINISH TRIM, TYPE 2	SCHLUTER	JOLLY	BRUSHED STAINLESS STEEL	J100EB	09 30 15	
P-1	PAINT - FIELD, TYPE 1	SHERWIN WILLIAMS	N/A	SW 7064 PASSIVE	N/A	09 90 00	SEE FLOOR FINISH PLANS, FINISH SCHEDULE & FINISH SCHEDULE REMARKS
P-2	PAINT - ACCENT, TYPE 1	SHERWIN WILLIAMS	N/A	SW 9163 TIN LIZZIE	N/A	09 90 00	SEE FLOOR FINISH PLANS, FINISH SCHEDULE & FINISH SCHEDULE REMARKS
P-3	PAINT - ACCENT, TYPE 2 (DOOR TRIM)	SHERWIN WILLIAMS	N/A	SW 7068 GRIZZLE GRAY	N/A	09 90 00	SEE FLOOR FINISH PLANS, FINISH SCHEDULE & FINISH SCHEDULE REMARKS
P-4	PAINT - ACCENT, TYPE 3	SHERWIN WILLIAMS	N/A	SW 7600 BOLERO	N/A	09 90 00	SEE FLOOR FINISH PLANS, FINISH SCHEDULE & FINISH SCHEDULE REMARKS
P-5	PAINT - CEILING, TYPE 1	SHERWIN WILLIAMS	N/A	SW 7005 PURE WHITE	N/A	09 90 00	SEE FLOOR FINISH PLANS, FINISH SCHEDULE & FINISH SCHEDULE REMARKS
P-6	PAINT - CEILING, TYPE 2	SHERWIN WILLIAMS	N/A	SW 7069 IRON ORE	N/A	09 90 00	SEE FLOOR FINISH PLANS, FINISH SCHEDULE & FINISH SCHEDULE REMARKS
PC-1	CONCRETE FLOORING, POLISHED					03 35 10	SEE SPECS FOR FINISH DETAILS
PL-1	PLASTIC LAMINATE, TYPE 1	ARBORITE	ARTISAN WALNUT (AW)	W2002 CLASSIC ARTISAN WALNUT		06 41 16	SEE INTERIOR ELEVATIONS FOR LOCATIONS
PL-2	PLASTIC LAMINATE, TYPE 2	ARBORITE	ARTISAN WALNUT (AW)	W2005 NOBLE ARTISAN WALNUT		06 41 16	SEE INTERIOR ELEVATIONS FOR LOCATIONS
PT-1	PORCELAIN TILE, TYPE 1	ARIZONA TILE	MORE WOOD	NOCE. MAPEI GROUT - 07 CHOCOLATE	8X32 R11 ANTI-SLIP. 10MM THICK	09 30 14 & 09 30 15	SEE FLOOR FINISH PLANS
PT-2	PORCELAIN TILE, TYPE 2	ARIZONA TILE	THEMAR	VENATO GOLD. MAPEI GROUT - 02 PEWTER	12X24 MATTE.10MM THICK	09 30 15	
PT-3	PORCELAIN TILE, TYPE 3	ARIZONA TILE	FRAGMENT (FRAY)	GRAY. MAPEI GROUT -	2X2 MOSAIC. 9MM THICK	09 30 14	SEE FLOOR FINISH PLANS
RB-1	RUBBER BASE, TYPE 1	JOHSONITE	TRADITIONAL COVED WALL BASE	63 BURNT UMBER	4"	09 65 00	
RB-2	RUBBER BASE, TYPE 2	TARKETT JOHNSONITE	REPLAY	507 NIGHT	48" ROLL	09 65 00	
RF-1	RUBBER FLOORING, TYPE 1	TARKETT JOHNSONITE	TRIUMPH	LB9 RAINSTORM	24" X 24" SLIDELOCK TILE	09 65 00	
RF-2	RUBBER FLOORING, TYPE 2	TARKETT JOHNSONITE	TRIUMPH	KN1 RAINY DAY	24" X 24" SLIDELOCK TILE	09 65 00	
RF-3	RUBBER STAIR TREAD, TYPE 1	TARKETT JOHNSONITE	ANGLE FIT RUBBER STAIR TREAD W/INTEGRATED RISER	HAMMERED 20 CHARCOAL 40 BLACK RUBBER INSERT	5' LENGTH	09 65 00	
RSN-1	RUBBER STAIR NOSING, TYPE 1	TARKETT JOHNSONITE	RUBBER INSERT	40 BLACK		09 65 00	
SS-1	SOLID SURFACE, TYPE 1	CORIAN	SOLID SURFACE	ASH AGGREGATE		06 41 16	
SS-2	SOLID SURFACE, TYPE 2	CORIAN	SOLID SURFACE	ASH CONCRETE		06 41 16	
SS-3	SOLID SURFACE, TYPE 3	CORIAN	SOLID SURFACE	PEARL GRAY		06 41 16	WINDOW TRIM
WO-1	WALK-OFF MAT	BALCO	FMR-A: ABRASIVE TREAD, VINYL HINGE	ABRASIVE COLOR - BLACK. METAL COLOR - STANDARD MILL ALUMINUM	SEE FLOOR FINISH PLANS	12 48 43	
WS-1	MOTORIZED ROLLER WINDOW SHADE	MECHO	ECOVEIL 1550 SERIES (3% OPEN)	SHADOW GREY		12 24 13	
WS-2	MANUAL ROLLER WINDOW SHADE	MECHO	ECOVEIL 1550 SERIES (3% OPEN)	SHADOW GREY		12 24 13	
WS-3	MANUAL ROLLER WINDOW SHADE, BLACKOUT	MECHO	CHELSEA BLACKOUT 0250 SERIES	STEEL/GRAPHITE		12 24 13	

GENERAL FINISH NOTES

1.1 REFER TO INTERIOR ELEVATIONS, AND SPECIFICATIONS FOR FINISH INFORMATION AND ADDITIONAL INFORMATION ON SUBSTRATE PREP WORK & REQUIRED TESTING PRIOR TO FINISHES INSTALLATION.

1. ALL SCHEDULED DIRECTIONS (NORTH, EAST, SOUTH, WEST) ARE PER PLAN DIRECTIONS, NOT TRUE COMPASS DIRECTIONS.

1.2 NOTIFY ARCHITECT OF ANY IN THE FIELD DISCREPANCIES PRIOR TO FINISHES INSTALLATION.

1.3 GENERAL CONTRACTOR & SUB-CONTRACTORS TO VERIFY LEAD TIMES ON ALL PRODUCTS IMMEDIATELY UPON PROJECT AWARDMENT. SOME PRODUCTS REQUIRE 6-12 WEEKS LEAD TIME AND SUBSTITUTIONS ARE NOT ALLOWED, UON.

AGENCY/CODE REQUIREMENTS

2.1 INTERIOR WALL AND CEILING FINISHES SHALL COMPLY WITH 2022 CBC SECTION 803, BE CLASSIFIED IN ACCORDANCE WITH ASTM E84 OR UL 723, TESTED IN ACCORDANCE WITH NFPA 286 AND TABLE 803.11.

2.2 INTERIOR FLOOR FINISH AND COVERINGS SHALL COMPLY WITH 2022 CBC SECTION 804, BE TESTED IN ACCORDANCE WITH NFPA 253, COMPLY WITH ASTM E648 & SHALL HAVE A SPECIFIC OPTICAL DENSITY SMOKE RATING NOT TO EXCEED 450 PER ASTM E662.

ACCESSORIES

3.1 ALL WALLS TO RECEIVE CORNER GUARD CG1 @ 90' OUTSIDE CORNERS OF WING WALLS, SEE **8/A9.03**, CG2 & CG3 @ 90' OUTSIDE CORNERS, SEE **9/A9.03**. INSTALL CORNER GUARDS DIRECTLY ABOVE THE WALL BASE.

3.2 WHERE OCCURS, WALLS SHALL RECEIVE WALL PROTECTION WP1, SEE **15/A9.03**.. TOILET ROOMS SHALL RECEIVE WP2, SEE **14/A9.03**..

3.3 48"W FRP WAINSCOT - SEE INTERIOR ELEVATION FOR HEIGHTS

3.4 28"H STAINLESS STEEL BACKSPLASH AT DECON SINK

3.5 ALL WINDOWS SHALL RECEIVE WINDOW TREATMENT WT1, SEE **7/A9.03**.. REFER TO REFLECTED CEILING PLANS FOR TYPES PER LOCATION.

3.6 ALL RESTROOM WALL TILE BASE SHALL RECIEVE MTL3 AT WALL PROTECTION CONNECTION.

3.7 ALL ELECTRICAL DEVICE COVERS ARE TO BE WHITE U.N.O.

CASEWORK

4.1 REFER TO THE GENERAL NOTES FOR CASEWORK DETAIL 1/A10.4

4.2 ALL CASEWORK NOT IN RESTROOMS SHALL RECEIVE **PL-1** & **SS-1**, REFER TO INTERIOR ELEVATIONS.

4.3 ALL KITCHEN, APPARATUS BAY, AND SHOP CASEWORK SHALL RECEIVE **PL-1** AND **MC-1** UNO., REFER TO INTERIOR ELEVATIONS.

4.4 ALL CASEWORK IN RESTROOMS SHALL RECEIVE **PL-2** & **SS-2**, REFER TO INTERIOR ELEVATIONS.

4.5 FILLER STRIPS ARE REQUIRED AT ENDS OF CABINETS WHERE CABINETS ARE ADJACENT TO WALLS.

4.6 ALL INTERIORS OF ENCLOSED CABINETS INCLUDING SHELVING SHALL RECEIVE MELAMINE FINISH, UON. ALL INTERIORS OF OPEN CABINETS INCLUDING SHELVING SHALL MATCH THE EXTERIOR LAMINATE FINISH, UON.

4.7 REFER TO CASEWORK SCHEDULE ON DETAIL **20/A10.05** FOR LOCK TYPE AND LOCATION.

CEILING

5.1 ALL SCHEDULED CEILING HEIGHTS ARE FROM THE PRIMARY FLOOR LEVEL WITHIN THE ROOM AND OR SPACE, AND ARE NOT FROM AN ELEVATED FLOOR LEVEL, AND ARE NOT FROM A RECESSED FLOOR LEVEL.

5.2 REFER TO REFLECTED CEILING PLANS FOR CEILING HEIGHTS

FLOORING

6.1 REFER TO FINISH FLOOR PLANS.

6.2 TOP SET WALL BASE SHALL BE B1, UON. SEE **J--,--**. REFER TO INTERIOR ELEVATIONS, FINISH SCHEDULE & FLOORING FINISH PLANS. @ ALL SINK LOCATIONS PROVIDE WELD / CLEAR SEALANT @ TOP-SET WALL BASE TRANSITION TO FLOORING.

6.2 FLOORING & WALL BASE SHALL CONTINUE UNDER ADA COMPLIANT SLOPED & INTEGRAL TOE-KICK SINK CABINETS & WALL HUNG COUNTER. REFER TO INTERIOR ELEVATIONS.

6.4 ALL RESTROOM TRANSITIONS FROM FLOOR TO WALL SHALL RECIEVE **MT-1**.

1. ALL FLOORING TRANSITIONS AT DOORS SHALL BE LOCATED UNDER THE DOOR IN THE CLOSED POSITION, U.N.O.
2. PROTECT ALL FINISHED FLOORING SURFACES FROM DAMAGE DURING ALL CONSTRUCTION PHASES.

6.5 ALL RESTROOM TRANSITIONS FROM CERAMIC/PORCELAIN WALL TILE TO GYPSUM BOARD SHALL RECIEVE FINISH METAL TRIM **MT-2**

6.6 REFER TO TYPICAL FLOORING TRANSITION DETAILS FOR FLOORING MATERIAL TRANSITIONS.

PAINT

7.1 ALL WALLS IN THE ENTIRE PROJECT AREA'S SCOPE OF WORK SHALL RECEIVE PAINT **P-1**, UON. REFER TO PAINT FINISH PLANS. WHERE AREAS ARE NOT IN THE PROJECT SCOPE OF WORK, TERMINATE PAINT AT THE NEAREST INSIDE/OUTSIDE CORNER.

7.2 PAINT ALL EXPOSED CEILING-RELATED ITEMS, INCLUDING BUT NOT LIMITED TO, STRUCT. MEMBERS, STRUCT. DECK, DUCTWORK, DIFFUSERS, PIPING, CONDUIT, EQUIP. HOUSINGS, LIGHT FIXTURE HOUSINGS, CABLE SUPPORTS, CABLE TRAYS, EQUIP. SUPPORTS, HANGERS

7.3 PAINT ALL EXPOSED CEILING-RELATED ITEMS FLAT BLACK **P-6**, INCLUDING BUT NOT LIMITED TO, STRUCT. MEMBERS, STRUCT. DECK, DUCTWORK, DIFFUSERS, PIPING, CONDUIT, EQUIP. HOUSINGS, LIGHT FIXTURE HOUSINGS, CABLE SUPPORTS, CABLE TRAYS, EQUIP. SUPPORTS, HANGERS

7.4 PAINT ALL EXPOSED CEILING-RELATED ITEMS WHITE **P-5**, INCLUDING BUT NOT LIMITED TO, STRUCT. MEMBERS, STRUCT. DECK, DUCTWORK, DIFFUSERS, PIPING, CONDUIT, EQUIP. HOUSINGS, LIGHT FIXTURE HOUSINGS, CABLE SUPPORTS, CABLE TRAYS, EQUIP. SUPPORTS, HANGERS

7.5 DO NOT PAINT ACOUSTICAL STRUCT. DECK

7.6 ALL METAL DOORS & FRAMES & WINDOW FRAMES TO RECEIVE IN SEMI-GLOSS FINISH, UON.

7.7 ALL CEILINGS SHALL RECEIVE EGG-SHELL FINISH, UON.

7.8 TOILET ROOM WALLS & CEILINGS SHALL RECEIVE SEMI-GLOSS FINISH, UON.

7.9 ALL WALLS SHALL RECEIVE PAINT FINISH PRIOR TO INSTALLATION OF WALL BASE, CASEWORK & CEILING GRID'S PERIMETER WALL TRIM.

7.10 PAINT ALL H.M. DOORS U.N.O.

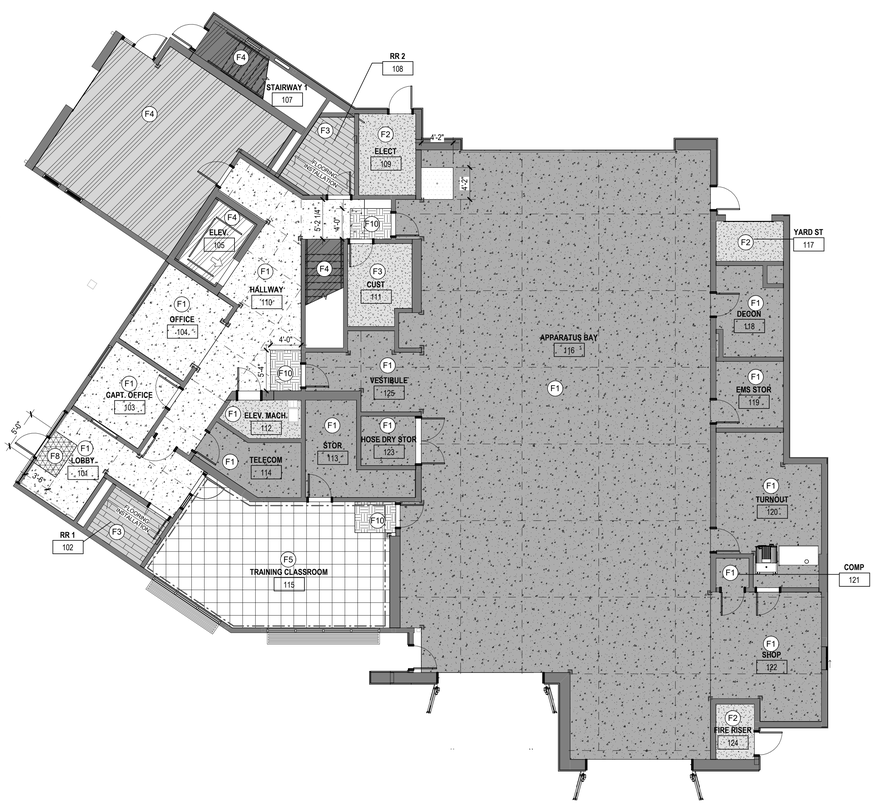

1 FP01 - FIRST FLOOR FINISH PLAN
SCALE: 1/8" = 1'-0"

2 FP02 - SECOND FLOOR FINISH PLAN
SCALE: 1/8" = 1'-0"

LEGEND

- F1 POLISHED CONCRETE - LEVEL 3
- F1 POLISHED CONCRETE - LEVEL 2
- F2 SEALED CONCRETE
- F3 PORCELAIN TILE - 8X32
- F3 PORCELAIN TILE - 2X2
- F4 RUBBER FLOOR, TYPE 1
- F4 RUBBER FLOOR, TYPE 2
- F4 RUBBER STAIR TREAD
- F5 CARPET TILES
- F6 DECK COVERING SYSTEM
- F1 EPOXY
- F8 WALK OFF MAT SEE DETAIL 1 / A10.3
- F9 AREA RUG - TACTILE INSTALLATION SYSTEM FROM INTERFACE
- F10 SURFACE ROLL-UP FLOOR MAT, BALCO OR APPROVED EQUAL
- ACCENT PAINT P-2
- ACCENT PAINT P-4
- STAINLESS STEEL CORNER GUARDS, SEE DETAIL 22 / A10.2

PBK
ARCHITECT PBK Architects, Inc.
PBK.com
SAN LUIS OBISPO
408 Higuera Street, Ste 100
San Luis Obispo, CA 93401
805-329-3076

FIRE STATION #44
COASTSIDE FIRE PROTECTION DISTRICT

501 STETSON STREET
MOSS BEACH, CA 94038
PLAN CHECK 02 RESPONSE

BID SET

KEY PLAN

PLAN NORTH TRUE NORTH

CLIENT
COASTSIDE FIRE PROTECTION DISTRICT
PROJECT NUMBER
230137
DATE 03/13/2026
DRAWN BY: KF/OS CHKED BY: AD
REVISIONS

#	DESCRIPTION	DATE

FLOOR FINISH PLAN & SCHEDULE

This document is for plan review only

A10.1

5/29/2026 4:38:16 PM

A10.2 - INTERIOR / SPECIALTY

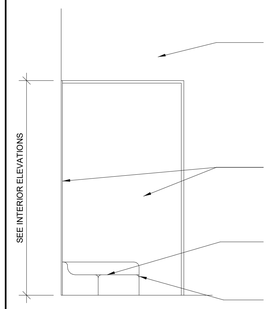

21 FLOOR SINK AND FRP
SCALE: 1/2" = 1'-0"

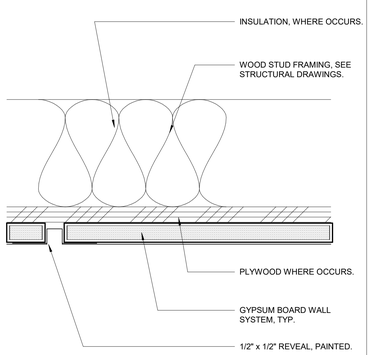

17 GYP BD REVEAL1
SCALE: 6" = 1'-0"

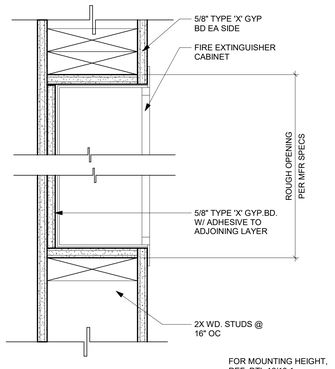

13 RECESSED FIRE EXT. CABINET
SCALE: 3" = 1'-0"

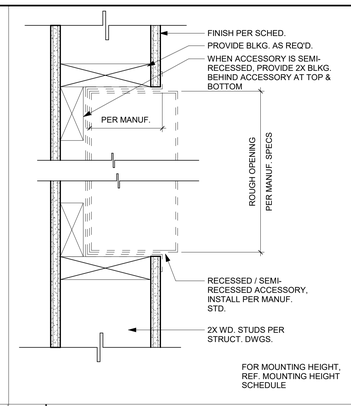

9 TYP. RECESSED ACCESSORY
SCALE: 3" = 1'-0"

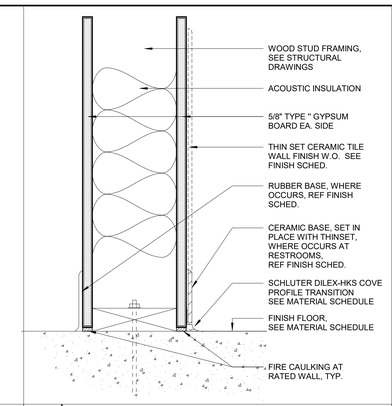

5 TYP. WALL BASE
SCALE: 3" = 1'-0"

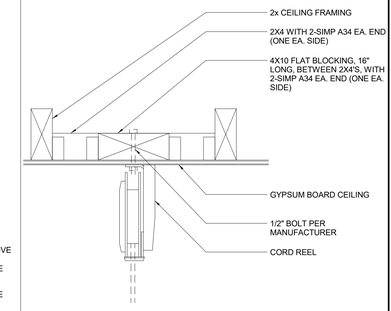

1 CORD REEL ATTACHMENT
SCALE: 1 1/2" = 1'-0"

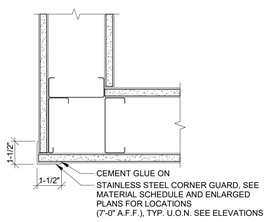

22 STAINLESS STEEL CORNER GUARD
SCALE: 3" = 1'-0"

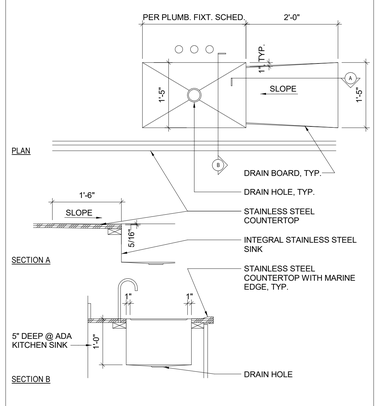

18 SS KITCHEN SINK
SCALE: 3/4" = 1'-0"

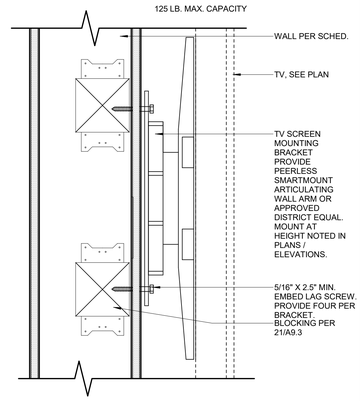

14 TV MOUNTING BRACKET
SCALE: 3" = 1'-0"

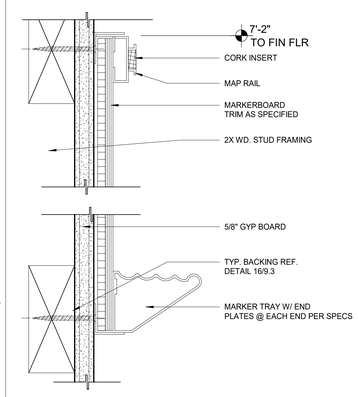

10 MARKERBOARD
SCALE: 6" = 1'-0"

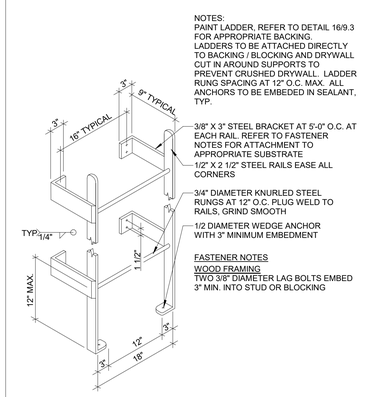

6 LADDER
SCALE: 1 1/2" = 1'-0"

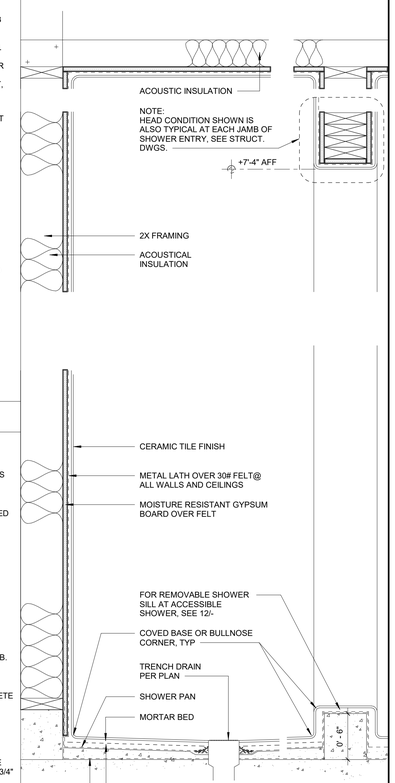

3 TYP. SHOWER SECTION
SCALE: 1 1/2" = 1'-0"

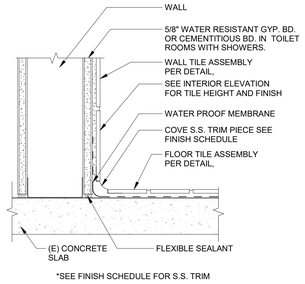

23 FLOOR TO WALL TILE
SCALE: 3" = 1'-0"

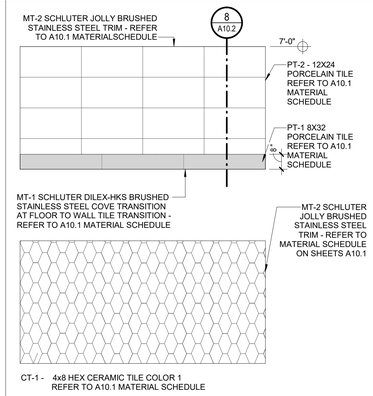

19 WALL TILE PATTERN
SCALE: 1/2" = 1'-0"

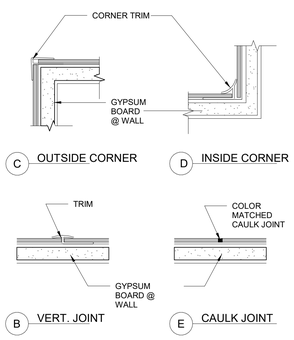

16 FRP DETAIL
SCALE: 1/2" = 1'-0"

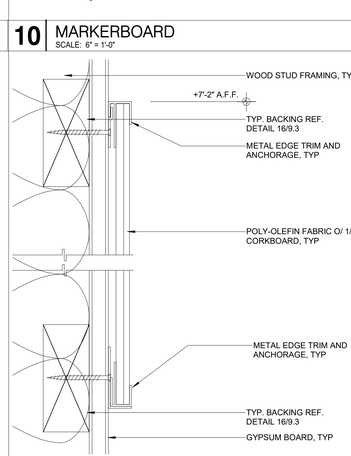

11 TACKBOARD
SCALE: 6" = 1'-0"

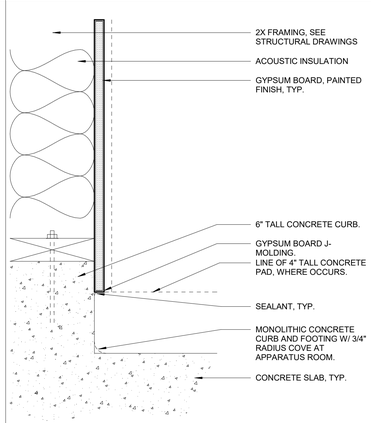

7 WALL BASE @ CONC. BASE
SCALE: 3" = 1'-0"

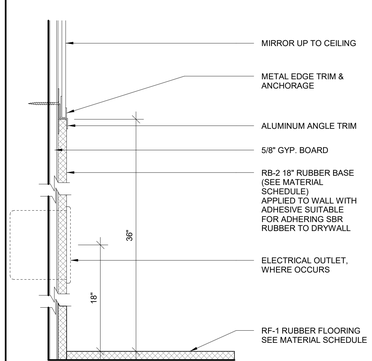

24 RUBBER FLOOR AND BASE
SCALE: 3" = 1'-0"

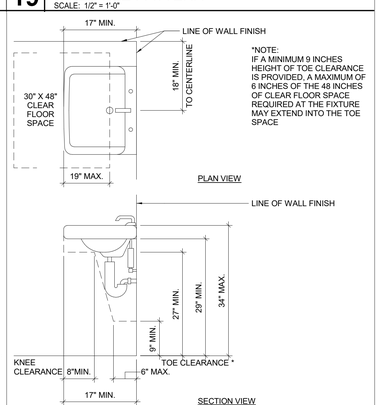

20 KNEE CLEARANCE @ SINK
SCALE: 3/4" = 1'-0"

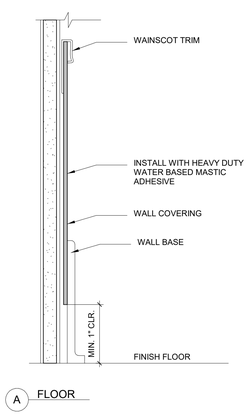

12 REMOVABLE SHOWER SILL
SCALE: 3" = 1'-0"

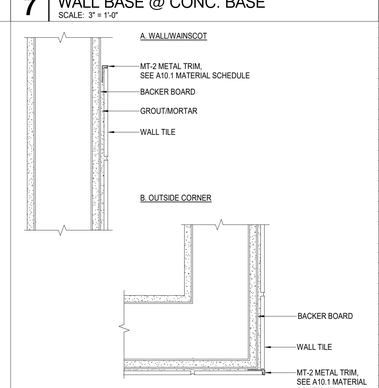

8 METAL TRIM
SCALE: NTS

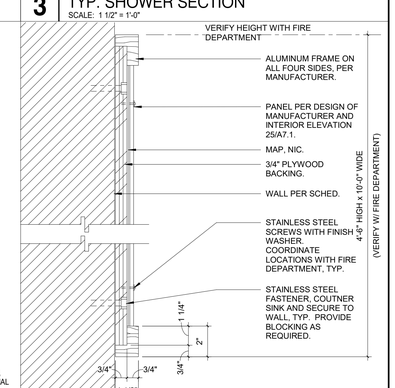

4 WALL MOUNTED MAP BOARD
SCALE: 3" = 1'-0"

5/29/2026 4:38:19 PM

PBK

ARCHITECT PBK Architects, Inc.
PBK.com
SAN LUIS OBISPO
408 Higuera Street, Ste 100
San Luis Obispo, CA 93401
805-329-3076

FIRE STATION #44
COASTSIDE FIRE PROTECTION DISTRICT

501 STETSON STREET
MOSS BEACH, CA 94038
PLAN CHECK 02 RESPONSE

BID SET

KEY PLAN
PLAN NORTH TRUE NORTH

This document is for plan review only

CLIENT	
COASTSIDE FIRE PROTECTION DISTRICT	
PROJECT NUMBER	
230137	
DATE	03/13/2026
DRAWN BY: KF/OS	CHKED BY: AD

REVISIONS

#	DESCRIPTION	DATE

INTERIOR / SPECIALTY

A10.2

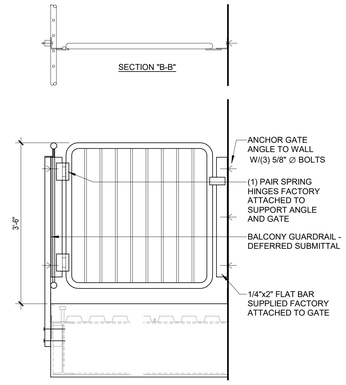

10 SLIDE POLE GATE
SCALE: 3/4" = 1'-0"

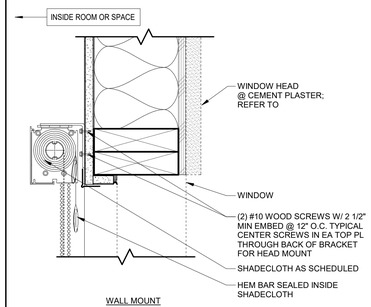

5 ROLLER SHADE - MANUAL
SCALE: 3" = 1'-0"

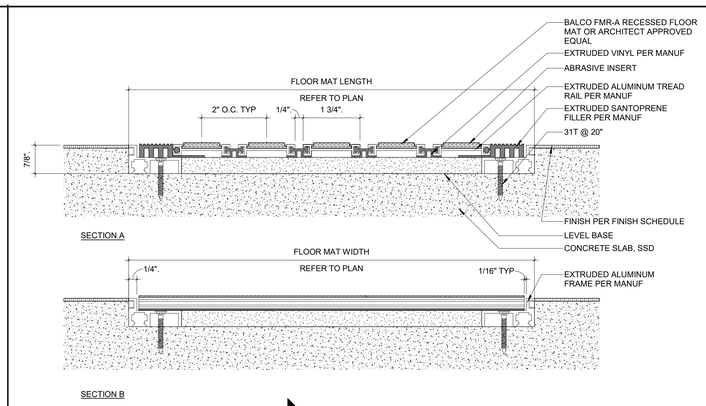

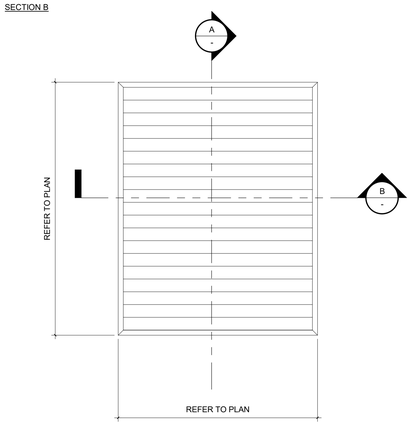

1 INTERIOR WALK-OFF MAT
SCALE: 1/4" = 1'-0"

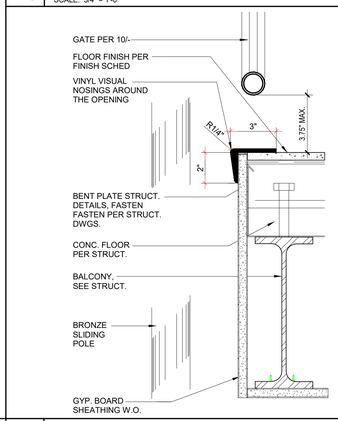

7 OPENING AT POLE AREA
SCALE: 3" = 1'-0"

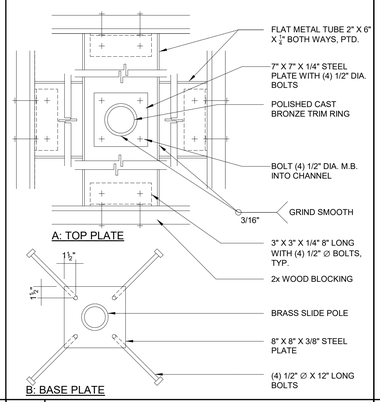

6 TOP AND BASE PLATE - SLIDE POLE
SCALE: 1 1/2" = 1'-0"

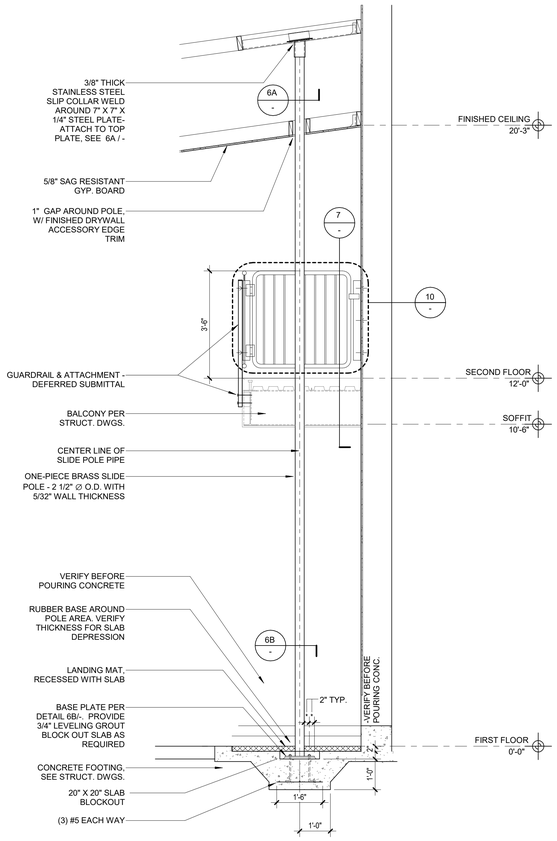

9 SLIDE POLE
SCALE: 1/2" = 1'-0"

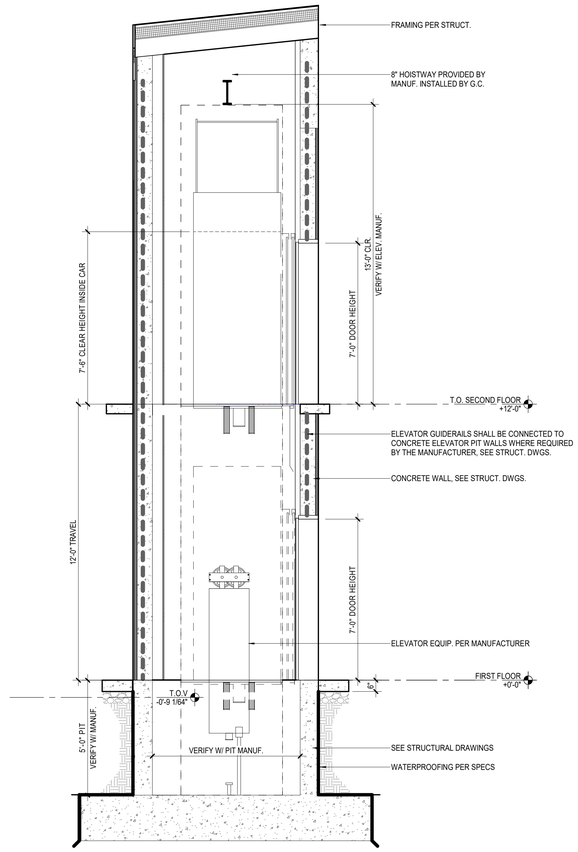

8 SECTION AT ELEVATOR PIT
SCALE: 3/8" = 1'-0"

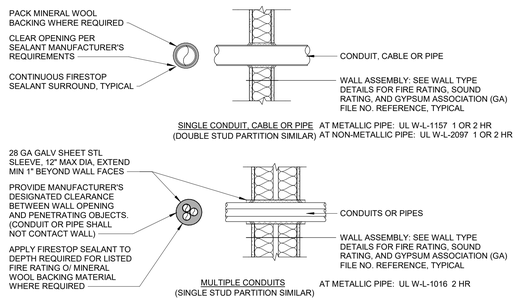

NOTES:
1. CONDUIT, CABLE, PIPE, ETC. PENETRATIONS OF FIRE-RATED PARTITIONS SHALL BE SEALED AS SHOWN, IN COMPLIANCE WITH MANUFACTURER'S INSTRUCTIONS. ANY GAP LARGER THAN ALLOWED FOR SPECIFIED FIRESTOP SEALANT SHALL BE FILLED WITH FIRE BLOCKS CUT TO SIZE FOR PENETRATIONS IN PLACE, PRIOR TO INSTALLING FIRESTOP SEALANT.
2. FIRE BLOCK AND FIRESTOP SEALANT PROVISIONS FOR PENETRATIONS AT FIRE-RATED WALL ASSEMBLIES TAKE PRIORITY OVER ACOUSTICAL PROVISIONS.

2 CONDUIT / PIPE PENETRATION FIRESTOP
SCALE: 1" = 1'-0"

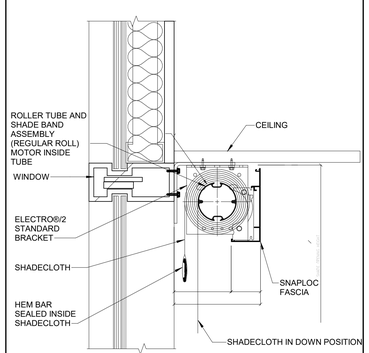

4 ROLLER SHADE - MOTORIZED
SCALE: 3" = 1'-0"

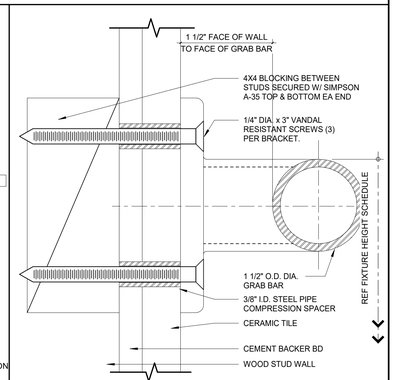

3 GRAB BAR @ WOOD STUD
SCALE: 1 : 1

PBK

ARCHITECT PBK Architects, Inc.
PBK.com
SAN LUIS OBISPO
408 Higuera Street, Ste 100
San Luis Obispo, CA 93401
805-329-3076

FIRE STATION #44
COASTSIDE FIRE PROTECTION DISTRICT

501 STETSON STREET
MOSS BEACH, CA 94038
PLAN CHECK 02 RESPONSE

BID SET

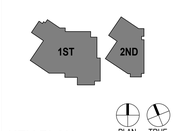

KEY PLAN
PLAN NORTH
TRUE NORTH

CLIENT
COASTSIDE FIRE PROTECTION DISTRICT
PROJECT NUMBER
230137
DATE 03/13/2026
DRAWN BY: KF/OS CHKED BY: AD
REVISIONS

#	DESCRIPTION	DATE

This document is for plan review only

INTERIOR / SPECIALTY

A10.3

5/29/2026 4:38:21 PM

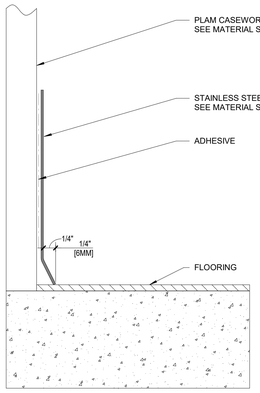

19 METAL BASE
SCALE: 3/8" = 1'-0"

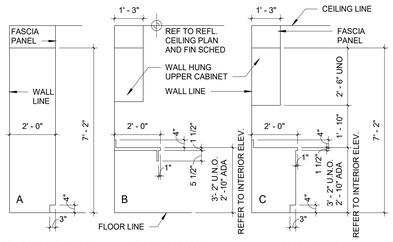

TYPICAL CABINET SECTIONS (NTS)

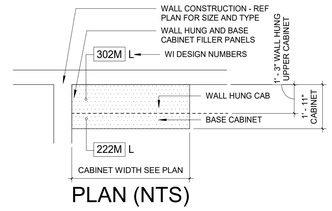

PLAN (NTS)

GENERAL NOTES:

1. REFER TO CASEWORK ANCHORAGE DETAILS 4/6.1
2. REFER TO CASEWORK ANCHORAGE NOTES 2/6.1
3. REFER TO GENERAL NOTES FOR CASEWORK 1/6.1
4. REFER TO ACCESSIBLE BASE CABINET DETAIL 10/6.1

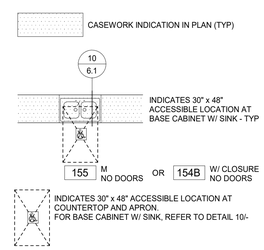

FASTENER SCHEDULE
FSTN QUANTITY INDICATED IN EA BOX IS TOTAL NUMBER OF FSTN IN EACH ROW, REF CASEWORK FSTNR LOCATION ELEVATION.

CABINET TYPE AND SIZE	WALL TYPE	CABINET WIDTH (W)						
		12"	18"	24"	30"	36"	42"	48"
BASE CABINET 36" H 24" D	WD	2	3	3	4	4	5	5
	MTL	2	3	3	4	4	5	5
	CMU	2	2	2	3	3	4	4
	CONC	2	2	2	3	3	3	3

1. CABINET DIMENSIONS SHOWN IS MAXIMUM SIZE. FOR CABINETS OF OTHER SIZES USE FSTN QUANITIES FOR NEXT LARGER CABINET SIZE.
2. WALL TYPE SHOWN AS WD, MTL, CMU AND CONC IS WALL MATERIAL TO WHICH FSTN IS TO BE ATTACHED.
3. FSTN TO BE SPACED EQUALLY IN EACH ROW OR LINE. WHERE SCREW FSTN IS USED, SPACING NOT TO EXCEED 12" O.C.

1. ALL CASEWORK SHOWN ON SCHEDULE NOT NECESSARILY USED. ONLY THOSE CASEWORK ITEMS CALLED OUT ON INTERIOR ELEVATIONS AND/OR FLOOR PLANS SHALL BE USED.
2. CASEWORK NUMBERS SHOWN ON SCHEDULE ARE THOSE OF THE WOODWORK INSTITUTE (WI) DESIGN NUMBERING SYSTEM.
3. ALL CASEWORK TO BE INSTALLED ACCORDING TO THE WI CERTIFIED SEISMIC INTALLATION AND MONITORED COMPLIANCE PROGRAM.
4. ALL CABINET DIMENSIONS INDICATED IN SCHEDULE ARE NOMINAL OUTSIDE DIMENSIONS.
5. ALL DIMENSIONS NOTED ON SCHEDULE ARE IN INCHES.
6. FILLER STRIPS ARE REQUIRED AT ENDS OF CABINETS WHERE CABINETS ARE ADJACENT TO WALLS.
7. ALL FILLER STRIPS AT ALL TALL AND WALL CABINETS TO HAVE TOP AND BOTTOM RETURNS.
8. HEIGHT DIMENSIONS OF BASE CABINETS INCLUDE FINISHED TOP THICKNESS OF 1 1/2" & SUBBASE HEIGHT OF 4" UNLESS OTHERWISE NOTED.
9. HEIGHT DIMESIONS OF APRONS INCLUDE FINISHED TOP THICKNESS OF 1 1/2" UNLESS OTHERWISE NOTED.
10. HEIGHT DIMENSIONS OF TOPS WITH APRONS FROM FINISHED FLOOR LINE SHALL MATCH HEIGHT OF ADJACENT BASE CABINETS UNLESS OTHERWISE NOTED.
11. ALL PLAN DIMENSIONS OF CASEWORK ARE CABINET DIMENSIONS ONLY & DO NOT INCLUDE TOPS.
12. PROVIDE FINISHED END PANELS FOR SUPPORT OF COUNTERTOPS AT UNDERCOUNTER EQUIPMENT OR KNEE SPACES WHERE THERE IS NO ADJACENT WALL OR CABINET THAT CAN BE USED FOR SUPPORT.
13. FINISH ALL EXPOSED PORTIONS OF CASEWORK AND COUNTERTOPS.
14. ALL UNITS INCLUDING OPEN UNITS SHALL HAVE CASEWORK MANUFACTURER'S STANDARD CABINET LINER UNLESS OTHERWISE NOTED.
15. ALL TOE SPACES SHALL BE 4" IN HEIGHT AND 3" IN DEPTH AND SHALL RETURN TO WALL WHERE ENDS OF CABINETS ARE EXPOSED.
16. ALL SHELVING SHALL BE ADJUSTABLE UNLESS OTHERWISE NOTED.
17. PROVIDE DUST CLOSURE PANELS TO CEILING OR DROPPED SOFFIT AS INDICATED ON ELEVATIONS OR PLAN.
18. ALL COUNTERTOPS SHALL BE 24" DEPTHS AS SHOWN IN SCHEDULE AND SHALL BE OF MAXIMUM PRACTICAL LENGTHS REQUIRED TO CONFORM TO OVERALL BASE CABINET DIMENSIONS.
19. PROVIDE BACKSPLASH RETURN AT ENDS OF COUNTERTOPS WHERE ADJACENT TO WALL OR OTHER FULL HEIGHT CASEWORK.
20. ALL SINKS, SINK TRIM & ELECTRICAL ITEMS SHALL BE FURNISHED BY OTHER THAN THE CASEWORK MANUFACTURER UNLESS OTHERWISE NOTED.
21. ALL COUNTERTOPS SHALL BE STAINLESS STEEL OR SOLID SURFACE. SEE FINISH PLANS.

5 FASTENER SCHEDULE
SCALE: NTS

1 GEN. NOTES FOR CASEWORK
SCALE: N.T.S.

20 CASEWORK SCHEDULE
SCALE: NTS

ROOM #	CASEWORK FINISH	COUNTERTOP AND SPLASH	LOCK
101 LOBBY	PL-1	N/A	KEY TYPE @ DISPLAY CASE
103 CAPT. OFFICE	N/A	SS-1	-
104 OFFICE	PL-1	SS-1	KEY TYPE @ CABINETS AND DRAWERS
115 TRAIN. CLASS	PL-1	SS-1	KEY TYPE @ CABINETS AND DRAWERS
116 APPAR. BAY	PL-1	SS-1	
111 CUST.	PL-1	SS-1	
122 SHOP	PL-1	MC-1	KEY TYPE @ CABINETS AND DRAWERS
125 VESTIBULE	PL-1	SS-1	
201 BAT. CHIEF	PL-1	SS-1	PADLOCK
203 BC RR	PL-2	SS-1	
204 DORM 1	PL-1	SS-1	PADLOCK
205 RR	PL-2	SS-1	
207 CAPT RR	PL-2	SS-1	
209 CAPTAIN	PL-1	SS-1	PADLOCK
210 DORM 2	PL-1	SS-1	PADLOCK
211 DORM 3	PL-1	SS-1	PADLOCK
212 LAUNDRY	PL-1	SS-1	
214 ACCESS. RR	PL-2	SS-1	
218 KITCHEN	PL-1	MC-1	
219 DINING	PL-1	MC-1	

9 TYPICAL CASEWORK LEGEND
SCALE: NTS

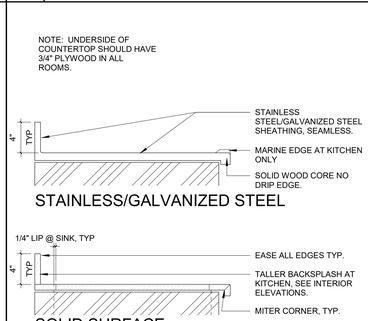

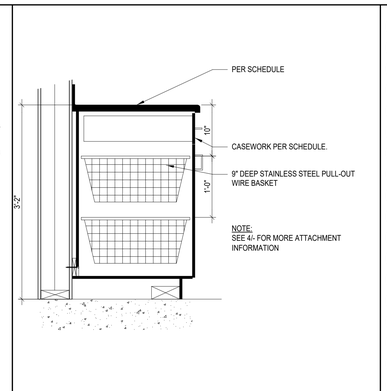

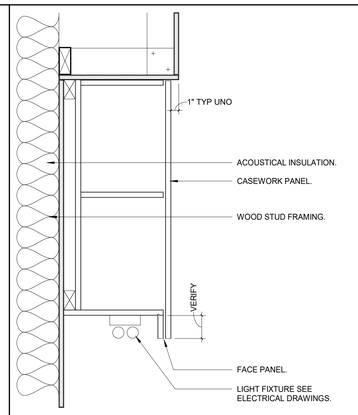

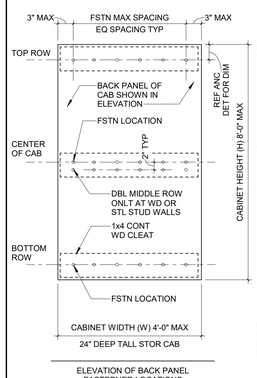

ELEVATION OF BACK PANEL FASTERNER LOCATIONS

FASTENER MAX SPACING:

1. WOOD STUD WALLS W/ 1 OR 2 LAYERS OF GYP BD = 6" OC
2. MET STUD WALLS W/ 1 LAYER OF GYP BD = 5-1/4" OC
   OR
3. MET STUD WALL W/ 2 LAYERS OF GYP BD = 4-1/4" OC
4. MASONRY WALL = 1' - 2" OC
5. CONCRETE WALL = 1' - 9" OC
6. MASONRY AND CONCRETE WALLS TO HAVE A MIN OF 6 ANCHORS PER CABINET, 1 AT EA CORNER AND 2 AT MIDDLE ROW

NOTE: REF CASEWORK ANC DETAILS AND NOTES FOR FURTHER EXPLANATION AND DETAIL

1. CASEWORK (FRONT) (BACK) (TOP) (BOTTOM)
2. FACE OF WALL
3. 1 x CONT WOOD CLEAT
4. CLG OR SOFFIT. REF REFL CLG PLAN AND INTERIOR ELEVATIONS.
5. FASTENER-TYPE VARIES BASE UPON WALL CONSTRUCTION AS FOLLOWS:
   WOOD STUD FRAMING - #14 FHWS W/ 2-1/2" MIN PENETRATION INTO 3X6 WD BLKG. 3" MAX FROM EA END. ANC BLKG TO EA WALL STUD W/ A34 ANC T& B. REF CASEWORK FSTN LOCATION EL FOR ANC SPACING.
   OR
   METAL STUD FRAMING - #14 FHMS W/ MIN 3 THREADS EXPOSED BEYOND BACKING PLATE. 3" MAX FROM EA END. BACKING PL TO BE 0.0538" THK X 6" HIGH GALV 50 KSI STL PL. ANC PL TO EA WALL STUD W/ 3-#10X1" LONG FHMS. REF CASEWORK FSTN LOCATION EL FOR ANC SPACING.
   OR
   MASONRY- 3/8" DIA HILTI KWIK BOLT 3 W/ 2-1/2" MIN EMBEDMENT & 4" MIN EDGE DISTANCE. ICC/ES NO. 1385. 3" MAX FROM EA END. INSTAL TORQUE 15 FT LB. REF CASEWORK FSTN EL FOR ANC SPACING.
   OR
   CONCRETE - 3/8" DIA HILTI KWIK BOLT TZ W/ 2" MIN EMBEDMENT & 6" MIN EDGE DISTANCE ICC/ES NO. 1917. 3" MAX FROM EA END. INSTAL TORQUE 25 FT LB. REF CASEWORK FSNT EL FOR ANC SPACING.
6. 3/4" PARTICLE BOARD BASE
7. CONT 2-1/2" X 2-1/2" X 0.0538" THK GALV 50 KSI BENT SHT STL ANGLE
8. 3/4" MEDIUM DENSITY FIBERBOARD FASCIA
9. 2 x 12 GUSSET @ 16"OC, 3" FROM EACH END W/ #12 x 2" LONG FHWS, SET 2X IN GLUE, NO EXPOSED SCREW HEADS IN EXPOSED VERTICAL PORTIONS OF FASCIA.
10. #12 x 1-1/2" LONG FHWS - 4" FROM EA END AND @ 12" OC
11. 3/8" DIA SIMPSON STRONG BOLT 2 W/ 2" MIN EMBEDDMENT, 3" FROM EA END & AT 24" OC W/ 6" MIN EDGED DISTANCE. ICC/ES NO. 3037, INSTAL TORQUE 30 FT LB MINIMUM 2 PER CABINET.

NOTE: REFER TO CASEWORK ANCHORAGE DETAILS, CASEWORK FASTENER SCHEDULE AND LOCATION ELEVATIONS FOR FURTHER EXPLANATION AND DETAIL.

20 CASEWORK SCHEDULE
SCALE: NTS

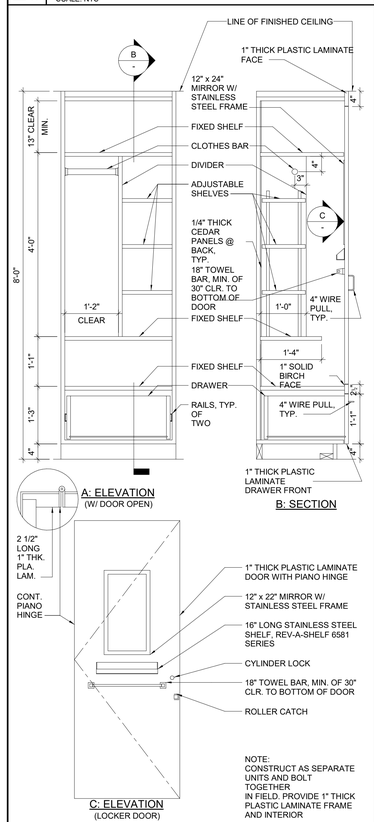

NOTE:
CONSTRUCT AS SEPARATE UNITS AND BOLT TOGETHER
IN FIELD. PROVIDE 1" THICK PLASTIC LAMINATE FRAME AND INTERIOR

10 DORM LOCKERS
SCALE: 3/4" = 1'-0"

15 COUNTERTOPS
SCALE: 1 1/2" = 1'-0"

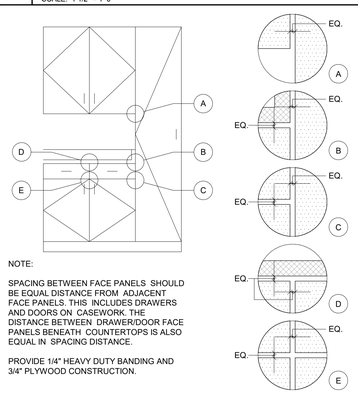

NOTE:

SPACING BETWEEN FACE PANELS SHOULD BE EQUAL DISTANCE FROM ADJACENT FACE PANELS. THIS INCLUDES DRAWERS AND DOORS ON CASEWORK. THE DISTANCE BETWEEN DRAWER/DOOR FACE PANELS BENEATH COUNTERTOPS IS ALSO EQUAL IN SPACING DISTANCE.

PROVIDE 1/4" HEAVY DUTY BANDING AND 3/4" PLYWOOD CONSTRUCTION.

16 CASEWORK
SCALE: 1/2" = 1'-0"

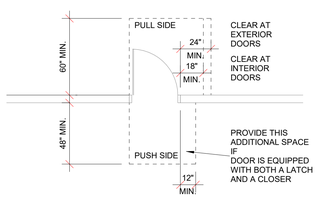

17 LEVEL MANUVERING CLEAR.
SCALE: 1/4" = 1'-0"

18 BASE CASEWORK PULL-OUTS
SCALE: 1" = 1'-0"

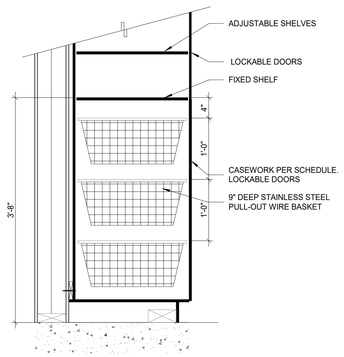

14 TALL CASEWORK PULL-OUTS
SCALE: 1" = 1'-0"

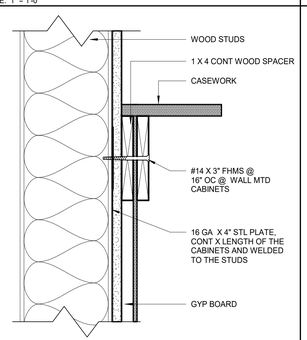

3 ANCHORAGE DETAIL
SCALE: 3" = 1'-0"

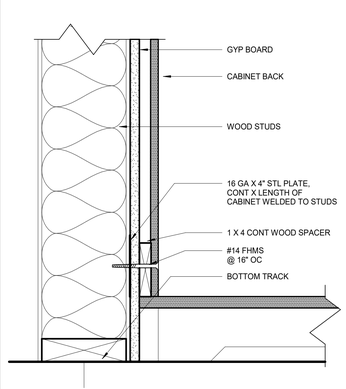

13 TYP. LIGHTING @ WALL CAB
SCALE: 1 1/2" = 1'-0"

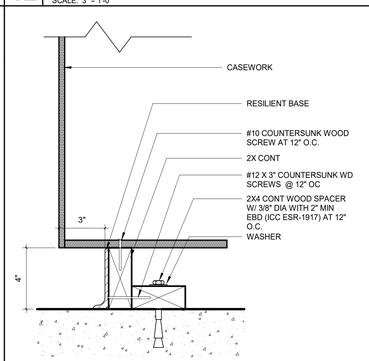

12 BASE ANCH @ WOOD STUD
SCALE: 3" = 1'-0"

11 BASE ANCHORAGE @ FRONT
SCALE: 3" = 1'-0"

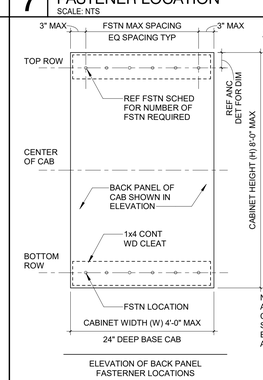

NOTE: REF CASEWORK ANC DETAILS AND NOTES FOR FURTHER EXPLANATION AND DETAIL

NOTE: REF CASEWORK ANC DETAILS, NOTES, AND CASEWORK FSTN SCHEDULE FOR FURTHER EXPLANATION AND DETAIL

ELEVATION OF BACK PANEL FASTERNER LOCATIONS

7 FASTENER LOCATION
SCALE: NTS

8 FASTENER LOCATION
SCALE: NTS

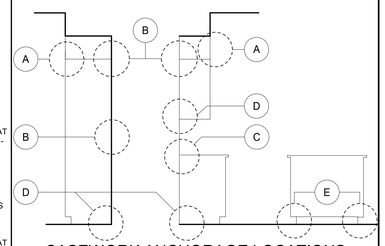

CASEWORK ANCHORAGE LOCATIONS

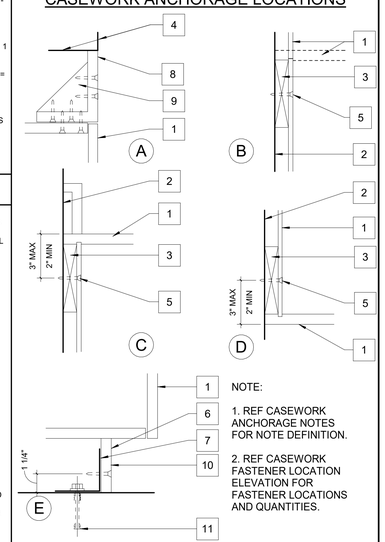

NOTE:

1. REF CASEWORK ANCHORAGE NOTES FOR NOTE DEFINITION.
2. REF CASEWORK FASTENER LOCATION ELEVATION FOR FASTENER LOCATIONS AND QUANTITIES.

2 ANCHORAGE NOTES
SCALE: NTS

4 ANCHORAGE DETAILS
SCALE: NTS

PBK

ARCHITECT PBK Architects, Inc.
PBK.com
SAN LUIS OBISPO
408 Higuera Street, Ste 100
San Luis Obispo, CA 93401
805-329-3076

FIRE STATION #44
COASTSIDE FIRE PROTECTION DISTRICT

501 STETSON STREET
MOSS BEACH, CA 94038
PLAN CHECK 02 RESPONSE

BID SET

KEY PLAN

PLAN NORTH TRUE NORTH

CLIENT
COASTSIDE FIRE PROTECTION DISTRICT
PROJECT NUMBER
230137
DATE 03/13/2026
DRAWN BY: KF/OS CHKED BY: AD
REVISIONS

#	DESCRIPTION	DATE

This document is for plan review only

MILLWORK DETAILS AND SCHEDULES

A10.4

5/29/2026 4:38:24 PM

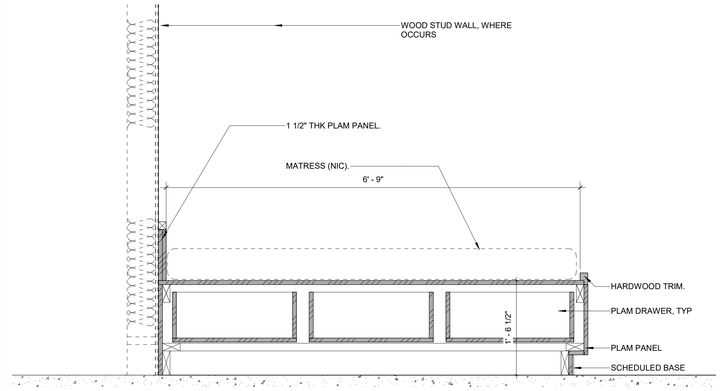

5 BED PLATFORM
SCALE: 1" = 1'-0"

NOTE:WHERE APPLIES, V-GROOVE SOLID SURFACE SEAMLESS CORNERS, NO SHARP EDGES

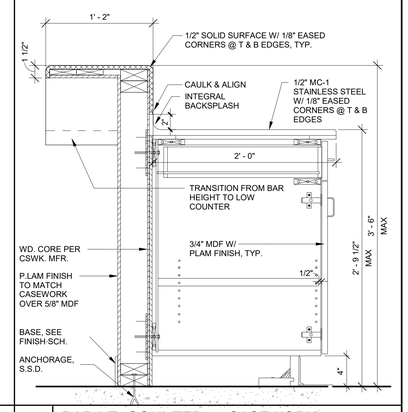

1 BAR HT. COUNTER @ CASEWORK
SCALE: 1 1/2" = 1'-0".

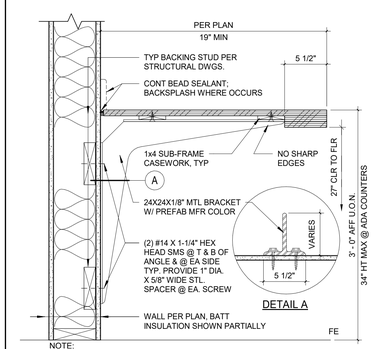

NOTE:

1. PROVIDE BRACKETS @ 32" TO 48" O.C. MAX

2 WALL MOUNTED COUNTER
SCALE: 1 1/2" = 1'-0"

PBK

ARCHITECT PBK Architects, Inc.
PBK.com
SAN LUIS OBISPO
408 Higuera Street, Ste 100
San Luis Obispo, CA 93401
805-329-3076

FIRE STATION #44
COASTSIDE FIRE PROTECTION DISTRICT

501 STETSON STREET
MOSS BEACH, CA 94038
PLAN CHECK 02 RESPONSE

BID SET

KEY PLAN

PLAN NORTH TRUE NORTH

CLIENT
COASTSIDE FIRE PROTECTION DISTRICT
PROJECT NUMBER
230137
DATE 03/13/2026
DRAWN BY: KF/OS CHKED BY: AD
REVISIONS

#	DESCRIPTION	DATE

MILLWORK DETAILS AND SCHEDULES

A10.5

This document is for plan review only

5/29/2026 4:38:25 PM

Abbreviations

add'l ..... Additional
alt ..... Alternate
AISC ..... American Institute of Steel Construction
AFA ..... American Plywood Association
ASTM ..... American Society for Testing and Materials
AWS ..... American Welding Society
AB ..... Anchor bolt
& ..... And
arch ..... Architect/Architectural
@ ..... At
bm ..... Beam
btwn ..... Between
blkg ..... Blocking
B.S. ..... Both sides
bott ..... Bottom
BN ..... Boundary nail
clg ..... Ceiling
cc ..... Center to center
℄ ..... Center line
clr ..... Clear
col ..... Column
CP ..... Complete Penetration
conc ..... Concrete
CMU ..... Concrete masonry unit
conn ..... Connection
C.J. ..... Construction Joint
cont ..... Continuous
csk ..... Contersink
C.T.J. ..... Control Joint
DL ..... Dead Load
diag ..... Diagonal
dia ..... Diameter
do ..... Ditto
D.F. ..... Douglas Fir
dbl ..... Double
dwg ..... Drawings
ea ..... Each
E.F. ..... Each Face
embed ..... Embedment
EN ..... Edge Nail
E.W. ..... Each Way
elev, el ..... Elevation
eq ..... Equal
eq/up ..... Equipment
(e) ..... Existing
E.J. ..... Expansion Joint
F.C. ..... Face of concrete
F.B. ..... Face of block
F.M. ..... Face of masonry
F.S. ..... Face of Stud
F.F. ..... Finish floor
F.G. ..... Finish grade
flr ..... Floor
ftg ..... Footing
fnd ..... Foundation
frmg ..... Framing
galv ..... Galvanized
ga ..... Gauge
GLB ..... Glued-laminated beam
hgr ..... Hanger
hdr ..... Header
ht ..... Height
HSB ..... High strength bolt
HSS ..... Hollow structural section
horiz ..... Horizontal
int ..... Interior
jst ..... Joist
jh ..... Joist hanger
lt. wt. ..... Light weight
L.L. ..... Live Load
L.L.H. ..... Long leg horizontal
L.L.V. ..... Long leg vertical
L.V.L. ..... Laminated veneer lumber
MB ..... Machine bolt
mfr ..... Manufacturer
max ..... Maximum
mech ..... Mechanical
min ..... Minimum
misc ..... Miscellaneous
mtl. ..... Metal
(N) ..... New
nts ..... Not to scale
..... Number or pounds
oc ..... On center
OHG ..... Open web girder
OHJ ..... Open web joist
O.H. ..... Opposite Hand
o.d. ..... Outside diameter
PP ..... Partial penetration
PL ..... Plate
pcf ..... Pounds per cubic foot
psf ..... Pounds per square foot
psi ..... Pounds per square inch
PAF ..... Powder actuated fasteners
PSL ..... Parallel strand lmber
PTDF ..... Pressure treated douglas fir
r. rad ..... Radius
RDWD ..... Redwood
reinf ..... Reinforcing
req'd ..... Required
R.O. ..... Rough opening
Ø ..... Round or diameter
sched ..... Schedule
SDSTS ..... Self drilling self tapping screw
shtg ..... Sheathing
SMS ..... Sheet metal screw
slm ..... Similar
□ ..... Square
stagg ..... Staggered
std ..... Standard
stl ..... Steel
stfnr ..... Stiffener
struct ..... Structural
symm ..... Symmetrical
TN ..... Toe nail
t&b ..... Top & bottom
t.o.c. ..... Top of concrete
t.o.f. ..... Top of framing
t.o.℄ ..... Top of plate
t.o.s. ..... Top of Steel
t.o.w. ..... Top of Wall
t&g ..... Tongue & Groove
TS ..... Tube Steel
typ ..... Typical
u.n.o. ..... Unless noted otherwise
vert ..... Vertical
w/ ..... With
w/n ..... Within
w/o ..... Without
WS ..... Wood screw
W.P. ..... Working point
WWF ..... Welded wire fabric
WCLIB ..... West Coast Lumber Inspection Bureau

General Notes

1. Construction shall conform to all applicable codes and regulations.
2. Shop Drawing Note:
   A) Shop drawings shall be submitted in the form of three prints of each sheet, unless submittal to the Building Official requires additional sets.
   B) The purpose of shop drawings submittals by the Contractor is to demonstrate to the Structural Engineer that he understands the design concept by indicating which materials he intends to furnish and install, and by detailing the fabrication and installation methods he intends to use.
   C) Prior to fabrication, shop drawings shall be submitted for review to the Structural Engineer. Shop drawings submittals shall include, but are not necessarily limited to plated wood roof trusses, structural steel, and glued laminated beams.
3. Safety Note:
   A) It is the Contractor's responsibility to comply with the pertinent sections, as they apply to this project, of the "Construction Safety Orders" issued by the State of California latest edition, and all OSHA requirements.
   B) The owner and the Structural Engineer do not accept any responsibility for the Contractor's failure to comply with these requirements.
   C) The Contractor shall be responsible for adequate design and construction of all forms and shoring required.
4. The Contractor shall notify the Architect and Structural Engineer where a conflict or a discrepancy occurs between the structural drawings and any other portion of the contract documents or existing field conditions. Such notification shall be given in due time so as not to affect the construction schedule. In case of a conflict between structural drawings and specifications, the more restrictive condition shall take precedence unless written approval has been given for the least restrictive. Contractor shall verify all dimensions with architectural and structural drawings prior to commencing any work.
5. Where no specific detail is shown, the construction shall be identical or similar to that indicated for like cases of construction on this project. Should there be any question, contact the Architect and Structural Engineer prior to proceeding.
6. These drawings are not complete until reviewed and accepted by local building official and signed by the Structural Engineer.
7. All drawings and written material appearing herein constitutes the original and unpublished work of the Structural Engineer and the same may not be duplicated, used or disclosed without written consent of the Structural Engineer and compensation.
8. The structure shown on these drawings is structurally sound only in its completed form. The stability of this structure depends on the diaphragm and the bracing members shown. The Contractor is to provide for the design and construction of shoring for all earth, forms, concrete, steel, wood, and masonry to resist gravity, earth, wind, seismic, and construction loads. Shoring shall remain in place until all diaphragm and lateral resisting elements are in place in their entirety.

Design Criteria

1. Codes and Standards:
   a.) 2022 California Building Code (CBC)
   b.) Building Code Requirements for Structural Concrete - ACI 318
   c.) Building Code Requirements for Masonry Structures - TMS 402
   d.) Specification for Masonry Structures - TMS 602
   e.) Specification for Structural Steel Buildings - AISC 360
   f.) Seismic Provisions for Structural Steel Buildings - AISC 341
2. Vertical Loads:
   Roof Live Load = 20 psf (reducible)
   Second Floor Live Load = 40 psf
3. Soils Values:
   Allowable soil bearing pressures:
   a.) DL+LL = 3000 psf
   b.) DL+LL+Wind/Seismic= 4000 psf
4. Wind Load Design Criteria:
   a.) Ult. Design Wind Speed, V_{ult}= 105 mph
   b.) Nom. Design Wind Speed, V_{nom}= 82 mph
   c.) Risk Category - IV
   d.) Wind Exposure - D
   e.) Internal Pressure Coefficient, GC_{pi}= -0.18, +0.18
5. Seismic Load Design Criteria:
   a.) Risk Category - IV
   b.) Seismic Importance Factor, I_e= 1.5
   c.) Site Class = D
   d.) S_s = 2.145g S_1 = 0.879g
   e.) S_{ds}= 1.43g S_{d1}= 0.996g
   f.) Seismic Design Category, SDC = F
   g.) Seismic Force-Resisting System/s: Special Reinforced Concrete Shearwalls, and Light Framed Wood Walls w/ Wood Sheathing
   h.) Response Modification Coef., R = 5
   i.) Analysis Procedure = Equivalent Force Procedure
   j.) Design Base Shear = 505 kips (USD) 354 kips (ASD)
   k.) Seismic Response Coef., CS = 0.515
   l.) Rho = 1.0

Foundations

1. All site preparation and foundation work shall be done in accordance with the requirements of the Soils Report No. E9371-04-01 by: GEOCON dated January 2025
2. All foundations shall bear on competent marine terrace deposits or alluvium, or properly compacted fill.
3. Building pad construction shall conform to the requirements of the Soils Report.
4. Bottoms of all foundations shall be level. Changes in bottom of foundation elevation shall be constructed only as detailed on the drawings.
5. Foundations may be cast in neat excavations provided the footing excavations are stable and able to maintain a cut edge without sloughing. Provide formwork and planking at edges of excavations to protect against sloughing, as required.
6. Notify the Structural Engineer 48 hours before casting foundations.

Wood

1. Sawn lumber shall conform to the following minimum specifications unless noted otherwise:

Member	Species	Grade
2x joists, rafters, and sub-purlins	Douglas Fir-Larch	No. 2
2x and 3x studs, plates, and blocking	Douglas Fir-Larch	No. 2
4x and 6x posts	Douglas Fir-Larch	No. 1
4x and 6x beams, purlins, and headers	Douglas Fir-Larch	No. 1

2. Glued Laminated Beams shall be manufactured and identified as required in ANSI/AITC A 190.1 and ASTM D 3737. Glued laminated beams shall be combination 24F-V4 for simple span members and 24F-V8 for cantilevered members. All glued laminated beams shall be manufactured with a 2000 ft. radius camber (except cantilevers shall have no camber) unless noted otherwise. Each glued-laminated beam shall be fabricated with exterior glue and shall be assumed to be for exterior use. Each glued-laminated beam shall be sealed and wrapped per AITC III.
3. Preservative-treated wood shall conform to the requirements of the applicable AWPA Standard U1 and M4 for the species, product, preservative, and end use. Preservative treated wood shall bear aquality mark stamp or label per CBC 2303.1.9.1.
4. Wood Structural Panel Sheathing shall conform to DOC PS 1 or PS 2.
5. All wood in direct contact with concrete or masonry shall be preservative-treated.
6. Bearing and shear walls shall have double top plates, lapped at wall and partition intersection with 3-16d nails. Splice double top plates as noted or detailed on the drawings.
7. Provide solid blocking between joists and rafters at all supports.
8. Provide blocking at all ceiling levels.
9. Holes for bolts in wood shall be bored with a bit equal in size to the diameter of the bolt plus 1/16 inch.
10. Holes for lag screws shall be bored as follows:
    a.) The clearance hole for the shank shall have the same diameter as the shank, and the same depth of penetration as the length of unthreaded shank.
    b.) The lead hole for the threaded portion shall have a diameter equal to 60% to 75% of the shank diameter and a length equal to at least the length of the threaded portion.
    c.) Lag screws and wood screws shall be screwed and not driven into place. Soap may be used to lubricate the screws.
11. All bolts and lag screws shall be provided with metal washers under heads and nuts which bear on wood. Applies also to inserted expanding fasteners, Red Head, etc.
12. Lay all structural sheathing panels on roofs and floors with face grain perpendicular to supports unless noted otherwise.
13. Use plywood clips at midspan of all unsupported roof sheathing edges.
14. Connector hardware model number are those for Simpson Strong-Tie Company. Equivalent connectors with ICC Evaluation Report may be substituted. All joist hangers shall be Simpson U series unless noted otherwise.
15. Nails shall have the following minimum dimensions (measured before application of any protective coatings):

Nail	Diameter	Length
16d common	0.162"	3½"
10d common	0.148"	3"
10d common	0.131"	2½"
16d sinker	0.148"	3¼"
10d box	0.128"	3"
8d box	0.113"	2½"

16. Anchor bolts for foundation sill plates shall be ⅝" diameter with a 12" minimum length, & 7" minimum embedment into concrete. Anchor bolts shall conform to ASTM A307 with a standard hex head at the embedded end or, shall conform to ASTM A36 with a fully engaged hex nut on the embedded end. Anchor bolts shall be spaced at 48"cc unless noted otherwise. Provide at least two anchor bolts per each piece of foundation sill plate and, provide an anchor bolt not more than 12" nor less than 4" from the ends of each piece of foundation sill plate. All anchor bolts at non- shearwalls shall have standard cut washers, and, shearwalls shall have plate washers at all anchor bolts per the shearwall schedule.
17. Per CBC 2304.10.5, fasteners (including nuts, washers, and connector) for preservative-treated and fire-retardant-treated wood shall be of hot-dipped galvanized steel or stainless steel.
18. No upset threaded bolts allowed; use only cut-thread bolts with full diameter bodies. See table below for dimensional requirements for cut-thread bolts with full diameter bodies:

Nominal Bolt Size (inches)	Body or Shank Diameter (inches)	
	Max.	Min.
½" (0.500)	0.515	0.482
⅝" (0.625)	0.642	0.605
¾" (0.750)	0.768	0.729
⅞" (0.875)	0.845	0.852
1" (1.000)	1.022	0.976

Note: The body, or shank, of the bolt is the smooth part between the head and the threads.

Nailing Schedule

Connection	Nailing
1. Joist to sill or girder	3-8d common, toenail 3-3"x0.131" nails, toenail
2. Sole plate to joist or blocking	3-16d common @ 16"cc 4-3"x0.131" nails @ 16"cc
3. Top plate to stud	2-16d common 3-3"x0.131" nails
4. Stud to sole plate	4-10d common, toenail 4-3"x0.131" nails, toenail
5. Double top plates btwn lap splices	16d common @ 12"cc 3-3"x0.131" nails @ 8"cc
6. Double top plates at lap splices	12-16d common, evenly spaced 18-3"x0.131" nails, evenly spaced
7. Built-up girders, beams, or multiple studs, joists and rafters made up of multiple 2x members)	2 rows of 16d common @ 24"cc 2 rows of 3"x0.131" nails @ 16"cc
8. Blocking btwn joists or rafters	2-10d common, toenail each end to joist or rafter
9. Blocking btwn joists or rafters to top plate or beam	3-10d common, toenail 3-3"x0.131" nails, toenail
10. Rim joist to top plate	10d common toenail @ 6"cc 3"x0.131" nails, toenail @ 6"cc
11. Top plate intersections	2-16d common 3-3"x0.131" nails
12. Ceiling joists to top plate	3-10d common, toenail 5-3"x0.131" nails, toenail
13. Ceiling joist laps over partitions	3-16d common, minimum 4-3"x0.131" nails, minimum Also see CBC Table 2308.10.4.1
14. Ceiling joist to parallel rafters	3-16d common, minimum 4-3"x0.131" nails, minimum Also see CBC Table 2308.10.4.1
15. Rafter to top plate	3-10d common, toenail 4-3"x0.131" nails, toenail
16. Built-up corner studs	16d common @ 16"cc 3"x0.131" nails @ 12"cc
17. Collar tie to rafter	3-10d common
18. Jack rafter to hip	3-10d common, toenail 4-3"x0.131" nails, toenail
19. Rafter to 2x ridge	3-16d common, toenail 5-3"x0.131" nails, toenail
20. Wood structural panel wall or floor sheathing	10d common @ 6"cc at edges and 10d common @ 12"cc in field

Notes:
1. This nailing schedule shall govern unless other connections are specifically detailed or noted otherwise.
2. Connections are "face nail" unless noted as toenail.
3. Holes shall be pre-drilled where necessary to prevent splitting.
4. Nailing not noted on plans or in this nailing schedule shall be a minimum of two nails at each contact, with 8d nails being used for 1" nominal material and 10d nails being used for 2" nominal material.

Laminated Veneer Lumber (LVL)

1. The laminated veneer lumber (LVL) specified on these drawings is manufactured by ICC RedBuilt LLC, ICC Report ESR-2493. Alternative LVL with current ICC reports may be substituted provided their design properties meet or exceed those specified (see below).
2. Minimum design stresses for normal load durations shall be as follows:

Shear modulus of elasticity	G = 125,000 psi
Modulus of elasticity	$E = 2.0 \times 10^6$ psi
Flexural Stress	F_B = 2400 psi
Compression perdendicular to grain	F_{CL} = 750 psi
Compression parallel to grain	F_{CG} = 2635 psi
Horizontal shear	Fv = 285 psi

Concrete

General: All concrete construction shall conform to the California Building Code (CBC), and Building Code Requirements for Structural Concrete (ACI 318).

1. Structural concrete shall attain 28 day compressive strength as required in note #20.
2. Selection of concrete proportions shall be per ACI 318 Sections 5.2 through 5.4. Submit mix designs for review prior to concrete placement.
3. Testing, evaluation and acceptance of concrete shall be per ACI 318.
4. Concrete shall be mixed, placed, and cured in accordance with ACI 318, latest edition, and project specifications.
5. Cement shall conform to ASTM C-150 type I or II.
6. Concrete aggregates shall conform to ASTM C-33. Aggregates for lightweight concrete shall conform to ASTM C-330.
7. Construction joints shall be made rough and all loose materials removed from the surface. The entire surface of the joint shall be roughened by chipping, sand blasting or raking the surface to produce ¼" deep deformations.
8. Remove all debris and loose materials from forms and excavations before casting any concrete.
9. Reinforcing dowels, bolts, anchors, sleeves, etc., to be embedded in concrete shall be tied securely in position before placing concrete.
10. Concrete shall not be dropped through reinforcing steel (as in walls) so as to cause segregation of aggregates. In such cases, hoppers and vertical chutes or trunks shall be used such that the free unconfined fall of concrete does not exceed six feet.
11. Consolidate concrete placed in forms by mechanical vibrating equipment supplemented by hand-spading, rodding or tamping. Use equipment and procedures for consolidation of concrete in accordance with the recommended practices of ACI 309 to suit the type of concrete and project conditions.
12. No wood spreaders allowed. No wood stakes allowed in areas to be concreted.
13. All saw cutting of construction joints shall be done after initial set has occurred to avoid tearing or damage by the saw blade, but before initial shrinkage has occurred.
14. Additional reinforcing in precast or tilt-up panels required for lifting stresses shall be supplied by the Contractor at no additional cost to the Owner.
15. Provide 2-#4x4'-0" diagonal reinforcing at mid-depth of slab at all reentrant corners typical.
16. See Architectural Drawings for wall openings, wall offsets, chamfers, kerfs, drips, etc.
17. Casting concrete during cold weather shall be in accordance with all provisions of ACI 306 (latest edition), Standard Specification for Cold Weather Concreting.
18. Casting concrete during hot weather shall be in accordance with all provisions of ACI 305 (latest edition), Specification for Hot Weather Concreting.
19. Special provisions for floor slabs on ground:
    a.) The parameters for the mix design listed below for floor slabs on ground are intended to provide a low shrinkage concrete mixture.
    b.) Joints in the floor slabs shall be constructed and spaced per 2 / 5x5
    c.) Floor slabs shall be cast directly on a vapor barrier as specified on the drawings or in the specifications.
    d.) Floor slabs shall be moist cured for a minimum of 7 days unless otherwise noted in the specification.
    e.) Floor slabs shall not be loaded until they have reached their specified design strength.
20. Concrete types:

Class	Item	f'c @ 28 days	Aggregate Size	Unit Weight (pcf)	Max W/C Ratio
A.	Footings	4000 psi	1"	145	0.60
*B.	Floor Slabs on Ground	4000 psi	1"	145	0.45
C.	Concrete Walls	5000 psi	1"	145	0.45
*D.	Concrete Fill Over Metal Deck and Conc Fill at Interior Stair Treads	4000 psi	¾"	120	0.45
E.	Ext Walks & Pads	3000 psi	1"	145	0.50

* A shrinkage reducing admixture conforming to ASTM C-494 Type S, shall be included in this mix. Minumum dosage for shrinkage reducing admixture shall be 48 fluid ounces per cubic yard of concrete, or as recommended by the admixture manufacturer for general shrinkage reduction.

Notes:
a.) Concrete shall have a maximum slump of 4".
b.) A water-reducing admixture should be added where increased workability is needed or desired.

Reinforcing Steel

1. Reinforcing steel shall conform to ASTM A615- grade 60 for #4 and larger, and ASTM A615-grade 40 for #3 and smaller, except reinforcing steel to be welded shall conform to ASTM A706.
2. All preheating and welding of reinforcing bars shall be done in accordance with AWS D1.4 latest edition and shall be continuously inspected by a qualified laboratory. Contractor shall furnish to the laboratory, rebar mill certificates.
3. Reinforcing steel shall be fabricated in accordance with the ACI "Manual of Standard Practice for Reinforced Concrete Construction", latest edition.
4. Wire fabric shall conform to ASTM A-185 and shall be lapped 12" minimum at splices.
5. Reinforcing steel shall be kept clean and free of rust.
6. Shop drawings for reinforcing steel shall be submitted for review prior to fabrication and delivery of reinforcing steel.
7. Provide all accessories necessary to support and secure reinforcing steel in the positions shown on the plans. All reinforcing steel shall be tied securely in position prior to placing concrete.
8. The following minimum concrete cover shall be provided for reinforcing steel:
   a.) For concrete cast against earth.....3"
   b.) For concrete exposed to earth or weather:
   #5 and smaller bars.....1½"
   #6 and larger bars.....2"
   #8 and smaller bars in tilt-up panels.....1"
   c.) For concrete not exposed to earth or weather.....1½"
9. Splices in reinforcing steel shall be Class B unless noted otherwise and shall conform to the following schedule:

Lap Splice Length Schedule

Concrete Strength	Splice Class	Reinforcing Location	#3	#4	#5	#6	#7	#8	#9	#10	#11
3000 psi	B	Top Bars	17"	23"	28"	34"	55"	70"	86"	105"	125"
	B	Other Bars	13"	17"	22"	26"	43"	54"	66"	81"	97"
4000 psi and 5000 psi	B	Top Bars	15"	20"	24"	29"	48"	60"	74"	91"	109"
	B	Other Bars	12"	15"	19"	22"	37"	47"	57"	71"	84"

Notes:
a.) Schedule applies to uncoated, Grade 60 reinforcing steel, and normal weight, 3000 psi, 4000 psi, and 5,000 psi concrete.
b.) Top bars are located such that 12" or more of fresh concrete is cast below the splice.
c.) For light weight concrete, multiply lap lengths by 1.30.
d.) Schedule applies to bars with a clear spacing of not less than 3 inches plus 1 bar diameters, and, concrete cover of at least 1.5 inches.
e.) The reinforcing steel detailer may specify other lap splice lengths provided that the lap splices are based on the actual project conditions, and, that the detailer provide substantiating calculations or data justifying the lap splices. These alternate lap splice lengths must be clouded on the reinforcing steel shop drawings for approval prior to fabrication.

Powder Actuated Fasteners (PAF)

1. These notes govern all conditions called out on the plans as "PAF" unless specifically noted otherwise.
2. All PAF shall be as manufactured by Hilti Incorporated. Reference shall be made to the Hilti "Product Technical Guide" for additional information.
3. PAF driven into steel base material shall be X-CR type with P8 washers unless noted otherwise in the drawings. Length of fastener shaft shall be as required to penetrate through the steel base material. Minimum edge distance to any connected part shall be ½" and minimum fastener spacing shall be 2".
4. PAF driven into concrete base material shall be X-CR type with P8 washers unless noted otherwise in the drawings. Length of fastener shaft shall be as required to penetrate 1½" into the concrete base material. Minimum edge distance to any concrete material shall be 3" and minimum fastener spacing shall be 4".
5. PAF driven into concrete base material through metal deck shall be X-CR type with P8 washers. Length of fastener shaft shall be as required to penetrate 1" into the concrete through the low flute. Fastener shall be centered in the low flute and minimum fastener spacing shall be 4".
6. Installation of fasteners shall be in accordance with manufacturer's recommendations and the ICC-ES Evaluation Report ESR-1663, latest edition.

Structural Deferred Submittals

1. Deferred submittals shall conform to Section 107.3.4.1 of the CBC.
2. The submittal shall include but shall not be limited to layout drawing, any necessary sections and/or details, and calculations reviewed and stamped by a Civil Engineer licensed in the State of California.
3. Submittal documents for deferred submittal items shall be submitted to the Architect or Engineer of Record who shall review them and forward them to the Building Official.
4. The deferred submittal items shall not be installed until their design and submittal documents have been approved by the Building Official.
5. Ten working days shall be allowed for the Architect or the Engineer to review. Deferred submittals shall be made such that no delay in construction occurs.
6. The following are structural deferred submittal items:
   A.) Steel Stairs
   B.) Stair handrails and guardrails (designed for special loads of ASCE 7-16 Section 4.5.)

Steel Stairs

1. Supplier shall provide complete design drawings and calculations for all metal stairwaps including connections. Shop drawings shall indicated all connections to concrete, masonry and structural steel. Shop drawings and design calculations stamped and signed by a Civil Engineer licensed in the state in which the project is located, shall be submitted to the Architect and/or Engineer for review prior to fabrication.
2. Stairwaps shall be designed per 2022 California Building Code.
3. Stairwaps shall be designed for Dead Load + 100 psf Live Load, and Seismic Load.
4. Supplier shall provide all miscellaneous steel framing, embedded items and connectors for attachment of stairs for installation by the Contractor.
5. See Architectural drawings for stairway locations and layout.
6. Stairway landings shall be self-supporting (independent of the primary structural frame of the building) for both vertical and lateral loads.

Metal Deck Notes

1. Provide metal decking of type and gauge as shown on plans, and shall have the following minimum section properties:

Location	Type	Gauge	I (in⁴)	S+ (in³)	S- (in³)
Second Floor	B-36 Formlok	18	0.302	0.322	0.335

2. Metal floor deck shall be composite type, conforming to ASTM A-446 grade A and shall be galvanized (zinc coated) per ASTM A-525, G-60 grade coating.
3. Prior to fabrication, the Contractor shall submit shop drawings for the metal decking, showing deck gauge, size, and layout as well as closure conditions, welds to supports and side lap details.
4. Connection and welding of decking to structural supports and at deck side seams shall be as specified in the structural drawings.
5. No conduit or non-structural items may be placed in concrete over metal deck.
6. When placing concrete over metal deck, concrete should first be placed over beams and girders rather than at mid-span of the metal deck and concrete should not be piled beyond the finished depth of the slab.
7. All metal deck receiving concrete fill shall have factory-punched vent tabs to provide 1% ventilation typical.

Structural Observations

1. This structure requires "Structural Observation" per CBC Section 1704.6.
2. Per CBC Chapter 2, Structural Observation is defined as "The visual observation of the structural system by a registered design professional for general conformance to the approved construction documents." Structural Observation does not include or relive the responsibility for the inspection required by Section 110, 1705, or other sections of this code.
3. Per CBC Section 1704.6, "At the conclusion of the work included in the permit, the structural observer shall submit to the building official a written statement that the site visits have been made and identify any reported deficiencies which, to the best of the structural observer's knowledge, have not been resolved."
4. For this project, Structural Observations will be required but not limited to:
   a. Prior to first concrete placement at footings when all reinforcing steel is tied in place.
   b. When 75% of the structural framing is in place.
   c. When 100% of the structural framing is in place and the roof diaphragm is completely nailed.
5. It is the Contractor's responsibility to notify the Architect and Structural Engineer at least 48 hours in advance of these Structural Observations.
6. Structural Observations do not constitute Special Inspections of any type.

Structural Steel

General: All design, fabrication and erection of structural steel for buildings and structures shall be in accordance with the California Building Code (CBC), the Specification for Structural Steel Buildings (AISC 360), and, the Seismic Provisions for Structural Steel Buildings (AISC 341).

1. Structural steel W and WT shapes shall conform with ASTM A992 steel. Structural steel angles, channels, miscellaneous channels, and plates shall conform with ASTM A36 steel unless noted otherwise.
2. Steel pipe shall conform to ASTM A-53, Types E or S, grade B.
3. Structural steel tubing shall conform to ASTM A-500, grade B.
4. Welding shall be done by the electric arc process in accordance with American Welding Society standards, using only certified welders. All groove welds shall have complete penetration unless noted otherwise. All exposed welds shall be ground smooth. All welding to be done using E70xx electrodes, in addition welding of ASTM A572 grade 50 steel and ASTM A992 steel shall be done with low hydrogen E70xx electrodes.
5. All structural steel shall be erected plumb and true to line. Temporary bracing shall be installed and shall be left in place until other means are provided to adequately brace the structure.
6. Place non-shrink grout under all base plates before adding vertical load.
7. Bolted connections shall consist of unfinished bolts conforming to ASTM A-307 unless noted otherwise. Where high strength bolts are indicated, bolts conforming to ASTM A325-N shall be provided (provide A325-SC bolts where indicated.)
8. Holes for unfinished bolts shall be of the same nominal diameter of the bolt plus 1/16". Use standard AISC gage and pitch for bolts except as noted otherwise.
9. Holes for anchor bolts embedded in concrete shall be of the same nominal bolt diameter plus ⅜" unless noted otherwise.
10. Provide ½" diameter stitch bolts and ring fills, spaced at not more than 24"cc for all double angle members.
11. At wood to steel parallel contact, bolt with ½" diameter bolts at maximum 24"cc.
12. All structural steel shall receive minimum of one shop coat of red primer paint. Do not paint areas to be field welded, to receive friction type high strength bolts, or to be embedded in concrete. Provide additional painting as noted in the specifications.
13. All structural steel below grade shall have 3" minimum of concrete cover.
14. All structural steel member sizes shown on these design drawings shall be considered the minimum sizes required to satisfy Code requirements for stresses and deflection; If those minimum sizes shall be increased for issues concerning erection, transportation, fabrication (including but not limited to curving, distortions, fractures, etc.), or welding processes (including but not limited to distortions, etc.), the increased sizes shall be clearly shown on the shop drawings for review prior to fabrication, and, shall be supplied at no added cost to the owner.
15. Quality Control & Quality Assurance:
    a. Quality Control (QC) and Quality Assurance (QA) shall be provided and shall conform to both AISC 360-10, Chapter N, and, AISC 341-10, Chapter J.
    b. QC shall be provided by the fabricator and erector. QA shall be provided by the company retained to provide Special Inspections.
    c. The fabricator and erector shall establish and maintain quality control procedures and perform inspections to ensure that their work is performed in accordance with AISC chapters cited above and the construction documents. The quality control program shall comply with AISC 360-10, Section N2 and applicable portions of AISC 341-10, Chapter J.

Concrete Block Masonry Notes

General: All masonry construction shall conform to the California Building Code (CBC), Building Code Requirements for Masonry Structures (TMS 402-2016), and the Specification for Masonry Structures (TMS 602-2016).

1. The specified compressive strength, f'm, of the masonry shall be 2000 psi minimum.
2. Concrete block units shall conform to ASTM C-90 grade N-1 units. Compressive strength of concrete masonry units shall be 2000 psi.
3. Mortar proportions shall be Type S mortar and shall conform to ASTM C 270 and TMS 602.
4. Grout shall conform to TMS 602. Grout shall attain a minimum compressive strength of 2000 psi.
5. Lap all bars 48 diameters, minimum unless noted otherwise.
6. Grouting shall be in accordance with TMS 602.
7. Mechanically vibrate all grout pours per TMS 602.
8. All cells shall be filled solidly with grout. All grouting shall be done under the continuous observation of a qualified Special Inspector.
9. Compliance with the requirements for the specified compressive strength of masonry, f'm shall be in accordance with TMS 602, Unit Strength Method.

Special Inspections & Verifications

Special Inspections - General

1. Special Inspections shall be provided as listed on this sheet and as required by the California Building Code (CBC), Chapter 17.
2. All Special Inspections shall conform to the requirements of the Chapter 17 of the CBC.
3. All Special Inspections shall be performed by an Independent Inspection agency. Jobsite visits by the Structural Engineer do not constitute Special Inspections and are not a substitute for Special Inspections.
4. It is the contractors sole responsibility to see that these Special Inspections are performed.
5. Listed and tabulated on these drawings are only those Special Inspections required for structural systems. Refer to CBC Chapter 17, the architectural drawings and/or specifications, and local building codes for other Special Inspections that may be required.
6. The Special Inspector shall be a qualified person who shall demonstrate competence, to the satisfaction of the Building Official, for inspection of the particular type of construction or operation requiring special inspection.
7. The special inspectors shall keep and furnish records of inspections per CBC 1704.2.4.
8. Inspection of Fabricators: Where fabrication of structural load-bearing members and assemblies is being performed on the premises of a fabricator's shop, special inspection shall be provided per CBC Section 1704.2.5.
9. See the "Special Inspections Schedule" on this sheet for required structural Special Inspections and Verifications.

Special Inspections - Contractor Responsibility

Per CBC Section 1704.4, each contractor responsible for the construction of a main wind- or seismic-force-resisting system, designated seismic system or a wind- or seismic-resisting component listed in the statement of special inspections shall submit a written statement of responsibility to the building official and the owner prior to the commencement of work on the system or component. The contractor's statement of responsibility shall contain the acknowledgement of awareness of the special requirements contained in the statement of special inspections.

Special Inspections Schedule

Required Special Inspection And Tests per CBC Section 1705

X - Indicates items requiring Special Inspection/Verification

Item	Required	CBC Code Section/ Table/Reference	Notes
1. Steel Construction	X	1705.2	See AISC 360 for structural steel.
2. All Concrete Construction: (including welding of Reinforcing bars)	X	1705.3 & Table 1705.3	Not Required for Concrete Patios, Driveways and Sidewalks on Grade.
3. Masonry Construction		1705.4, TMS 402-16, and TMS 602-16	
a) Level 1 Quality Assurance		TMS 602-16 Tables 3 & 4	
b) Level 2 Quality Assurance		TMS 602-16 Tables 3 & 4	
c) Level 3 Quality Assurance	X	TMS 602-16 Tables 3 & 4	
4. Wood Construction		1705.5	
a) High Load Diaphragms		1705.5.1	
b) Metal-plate-connected wood trusses with overall heights of 60 inches or more, and/or trusses spanning 60 feet or more		1705.5.2	
c) IBC/IRC 2 & 3 Manufactured Trusses & Assemblies		1705.5.3	
5. Soils- Including items, if any, checked below	X	1705.6 & Table 1705.6	
a) Driven Deep Foundations		1705.7 & Table 1705.7	
b) Cast-in Place Deep Foundations		1705.8 & Table 1705.8	
c) Helical Pile Foundations		1705.9	
6. Fabricated Items		1705.10	
7. Special Inspections for Wind Resistance		1705.11	
8. Special Inspections for Seismic Resistance	X	1705.12	
9. Expansion & Adhesive Anchors	X	current ICC Evaluation Report for Anchor System	

PBK
ARCHITECT PBK Architects, Inc.
PBK.com
SAN LUIS OBISPO
1327 Archer Street, Suite 110
San Luis Obispo, CA 93401
805-329-3076
CONSULTANT
MLA
STRUCTURAL ENGINEERS INC
1132 Suncast Lane, Suite 6
El Dorado Hills, CA 95762
phone: (916) 941-2425
fax: (916) 941-2429

FIRE STATION #44
COASTSIDE FIRE PROTECTION DISTRICT
501 STETSON STREET
MOSS BEACH, CA 94038
PLANNING SUBMITTAL

BID SET

KEY PLAN
PLAN NORTH
TRUE NORTH

STAMP
REGISTERED PROFESSIONAL ENGINEER
JOHN M. MANDSAGER
No. 3824
Exp. 09/30/26
STRUCTURAL
STATE OF CALIFORNIA

CLIENT
COASTSIDE FIRE PROTECTION DISTRICT
PROJECT NUMBER 230137
DATE 12/05/25
DRAWN BY: GSL CHKED BY: JMM
REVISIONS

#	DESCRIPTION	DATE

This document is for plan review only

TYPICAL NOTES

S1.1

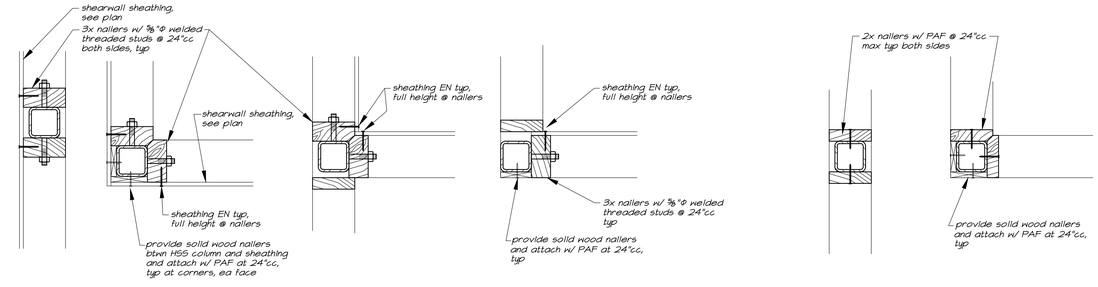

Conditions at Exterior Walls & Interior Shearwalls

Condition at Interior Non-Shearwalls

Notes:
1. It is the intent of this detail that all HSS columns in walls sheathed with wood sheathing be provided with 3x nailers with stud bolts as specified here. Further, it is intended that the sheathing be edge nailed to the 3x nailers for the full height of the nailer.
2. It is the intent of this detail that all HSS columns in interior non-shearwalls be provided with 2x nailers attached to the columns with PAF as specified here.
3. It is the intent of this detail that on sides of HSS columns without nailers, that require finish materials to be attached at the columns, that solid wood nailers be attached to the columns with PAF as specified here.
4. Field weld threaded studs to HSS columns as necessary.
5. "PAF" as referenced in this detail shall be Hilti X-CR P18 with a minimum shaft length of 2".

11/S1.2 Typical Nailers at HSS Columns in Walls
1½"=1'-0"

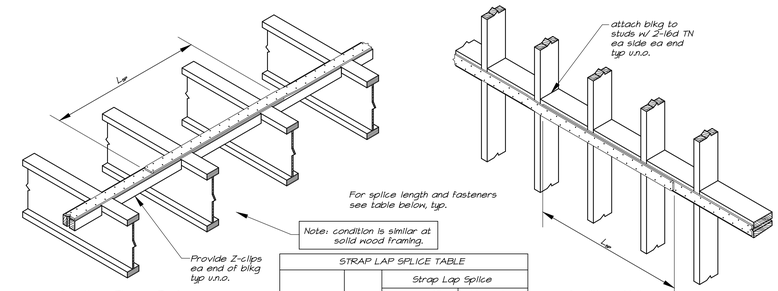

STRAP LAP SPLICE TABLE

Model No.	Ga	Strap Lap Splice: Minimum [1,2] Fasteners per splice	Strap Lap Splice: Min. splice Length (L_p)
CMSTI12	12	20-16d	19"
		24-10d	22"
CMSTI14	14	16-16d	15"
		20-10d	19"
CMSTC16	16	12-16d sinker	12"
		12-10d	12"

1. 10d commons can be replaced by 16d sinkers. No other nail substitution is allowed for lap splices.
2. Refer to the application code for minimum edge distance and minimum end distance.
3. No strap modification is allowed and the splice must meet both the minimum number of fasteners and the minimum Splice Length.

Detail 12/S1.2
¾"=1'-0"

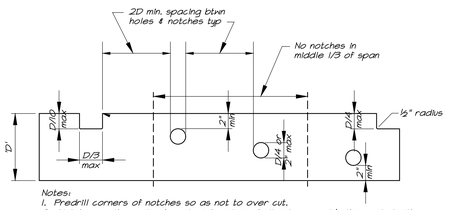

Notes:
1. Predrill corners of notches so as not to over cut.
2. Notches on the ends of joists & headers shall not exceed ¼ the joist depth.
3. Notches in the top of joists shall not exceed 1/10 the depth and shall not be located in the middle third of the span.
4. Notches on the bottom of joists allowed only where specifically shown on drawings.
5. Holes bored in joists shall not be within 2 inches of the top or bottom and shall not have a diameter larger than ¼ the depth of the joist.

@ Joists & Headers

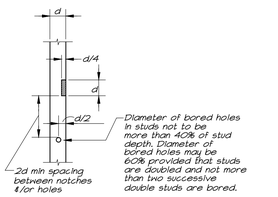

@ Stud Framing

Note: In no case shall the edge of the bored hole be nearer than ⅜" to the edge of the stud.

7/S1.2 Notches & Holes in Joists, Headers, & Studs
⅜"=1'-0"

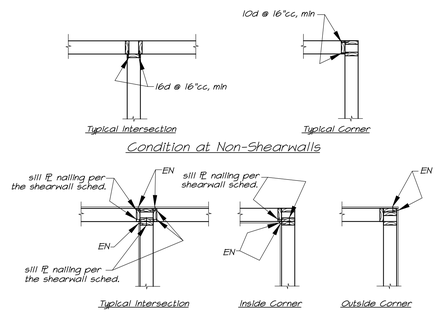

Condition at Shearwalls

8/S1.2 Typical Stud Framing at Corners
⅜"=1'-0"

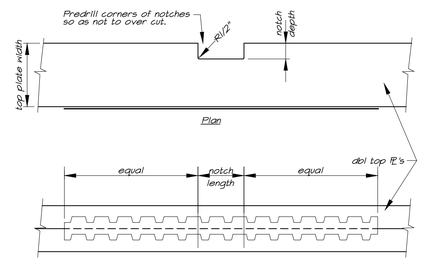

Simpson ST6224 strap where notch length is 3" or less. ST6236 strap where notch length is greater than 3" but less than 6". Use single strap on notch side where notch depth is up to 1/3 width of plates. Use strap on ea side where notch depth is greater than 1/3 width but less than 2/3 width of plate. No notch depth shall be greater than 2/3 width of plate.

Holes in top plates shall be centered on the plates and the diameter of such holes shall not exceed 60% of the width of the top plates. Use Simpson ST6224 strap at holes not exceeding 40% of the top plates width, and Simpson ST6236 strap at holes sizes exceeding 40% of the width of the top plates.

Where straps occur on both sides of the wall, use 16d x 2½" nails

9/S1.2 Splice of Top Plate @ Notch or Holes For Pipes or Conduits
⅜"=1'-0"

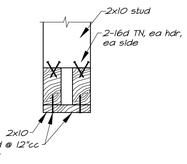

10/S1.2 Typical Double Header Detail
1"=1'-0"

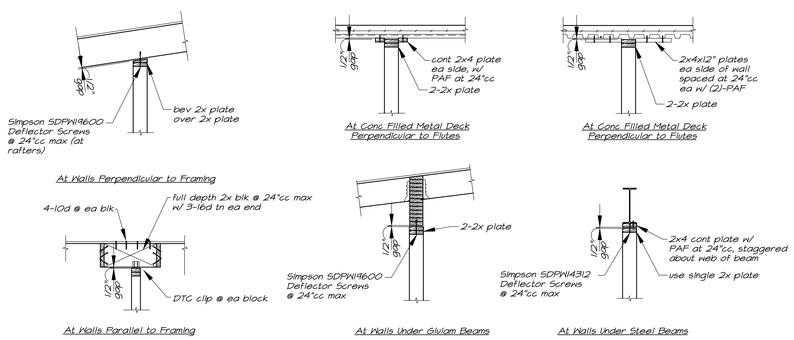

4/S1.2 Typical Non-Bearing Wall Conn.
½"=1'-0"

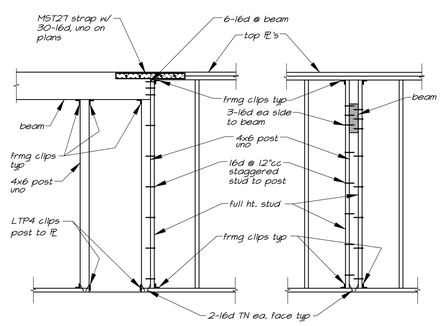

Note: Framing clips to be A34 @ 2x4 walls and A35 @ 2x6 & 2x8 walls, typical uno.

5/S1.2 Post & Beam Connections
½"=1'-0"

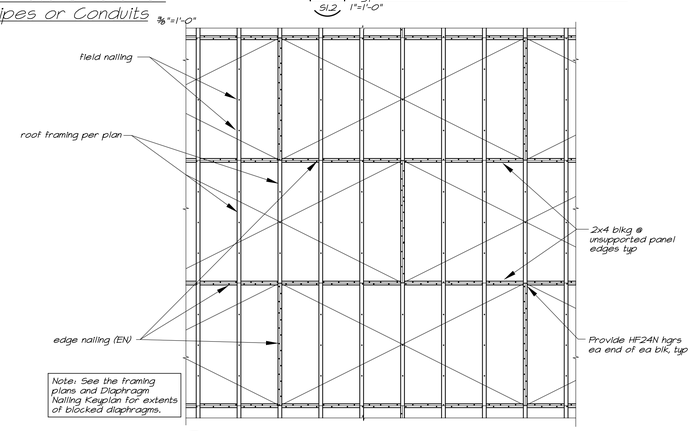

6/S1.2 Typical Blocked Diaphragm Nailing
½"=1'-0"

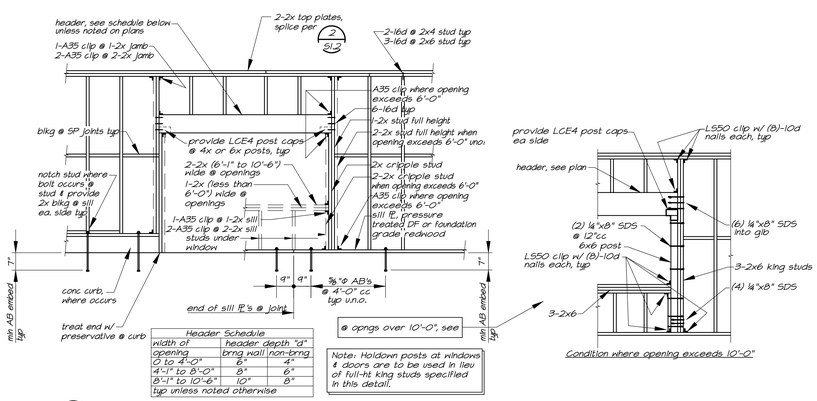

Header Schedule		
width of opening	header depth "d" brng wall	header depth "d" non-brng
0 to 4'-0"	6"	4"
4'-1" to 8'-0"	8"	6"
8'-1" to 10'-6"	10"	8"
typ unless noted otherwise		

Note: Holdown posts at windows & doors are to be used in lieu of full-ht king studs specified in this detail.

1/S1.2 Typical Stud Wall & Opening Framing
⅜"=1'-0"

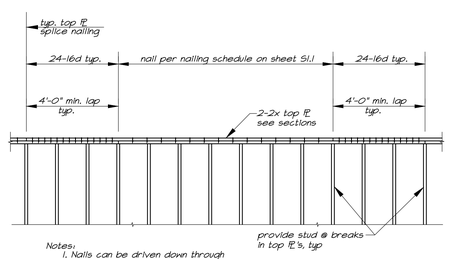

Notes:
1. Nails can be driven down through the top ℄ or up through the bottom ℄.
2. Stagger nails typ.
3. At 4'-0" laps, use 2 rows of nails staggered and evenly spaced.

Condition at 2-2x Top Plates

2/S1.2 Typical Top Plate Splice Detail
¼"=1'-0"

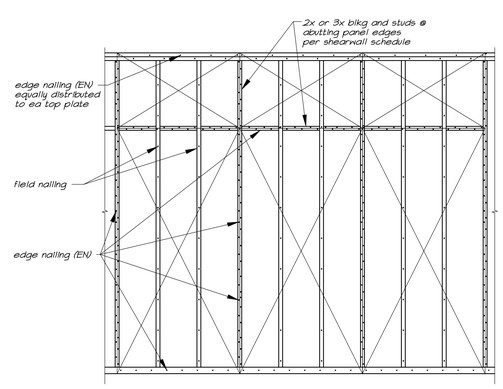

3/S1.2 Typical Shearwall Nailing
½"=1'-0"

PBK
ARCHITECT PBK Architects, Inc.
PBK.com
SAN LUIS OBISPO
1327 Archer Street, Suite 110
San Luis Obispo, CA 93401
805-529-3076

CONSULTANT
MLA
STRUCTURAL ENGINEERS INC
1132 Suncast Lane, Suite 6
El Dorado Hills, CA 95762
phone: (916) 941-2425
fax: (916) 941-2429

FIRE STATION #44
COASTSIDE FIRE PROTECTION DISTRICT

501 STETSON STREET
MOSS BEACH, CA 94038
PLANNING SUBMITTAL

BID SET

KEY PLAN
PLAN NORTH
TRUE NORTH

STAMP
REGISTERED PROFESSIONAL ENGINEER
JOHN M. MANDSAGER
No.3824
Exp.09/30/26
STRUCTURAL
STATE OF CALIFORNIA

CLIENT
COASTSIDE FIRE PROTECTION DISTRICT
PROJECT NUMBER
230137
DATE 12/05/25
DRAWN BY: GSL CHKED BY: JMM

REVISIONS

#	DESCRIPTION	DATE

TYPICAL DETAILS

This document is for plan review only

S1.2

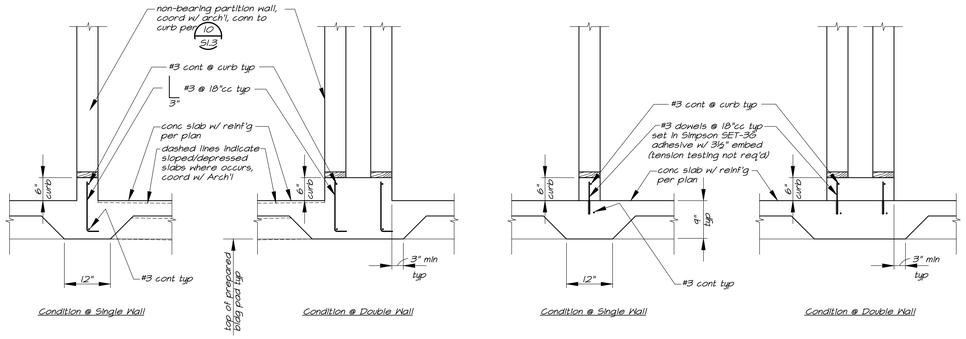

9/S1.3 Concrete Curbs @ Non-Bearing Walls and Non-Shearwalls ¾"=1'-0"

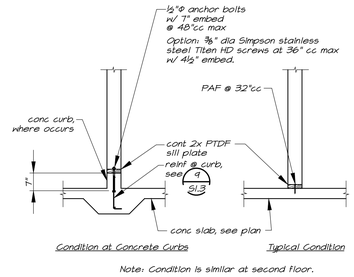

10/S1.3 Typical Non-Bearing Wall Conn. ½"=1'-0"

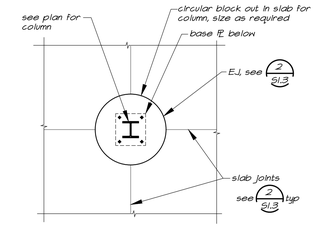

11/S1.3 Typical Slab Block-out ⅜"=1'-0"

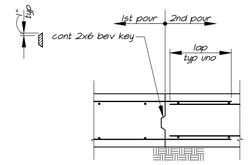

Detail 12/S1.3 ½"=1'-0"

Typical Apparatus Bay Slab Construction Joint

Standard Hooks & Bends for Bars Other than Stirrups, Ties and Hoops			
Type of Hook	Bar Size	D, Minimum Inside Bend Diameter, in.	Diagram of Hook
90 degree hook	#3 thru #8	$6d_b$	d_b = bar diameter; 90°; D = bend diameter; $12d_b$
	#9 thru #11	$8d_b$	
	#14 thru #18	$10d_b$	
180 degree hook	#3 thru #8	$6d_b$	d_b = bar diameter; 180°; D = bend diameter; greater of $4d_b$ or 2½"
	#9 thru #11	$8d_b$	
	#14 thru #18	$10d_b$	

Standard Hooks & Bends for Stirrups, Ties, and Hoops				
Type of Hook	Bar Size	D, Minimum Inside Bend Diameter, in.	L_{ext}	Diagram of Hook
90 degree hook	#3 thru #5	$4d_b$	greater of $6d_b$ and 3"	d_b = bar diameter; 90°; D = bend diameter; L_{ext}
	#6 thru #8	$6d_b$	$12d_b$	
135 degree hook	#3 thru #5	$4d_b$	greater of $6d_b$ and 3"	d_b; 135°; D = bend diameter; L_{ext}
	#6 thru #8	$6d_b$		
180 degree hook	#3 thru #5	$4d_b$	greater of $6d_b$ and 3"	d_b; 180°; D = bend diameter; L_{ext}
	#6 thru #8	$6d_b$		

5/S1.3 Rebar Hooks & Bends ⅜"=1'-0"

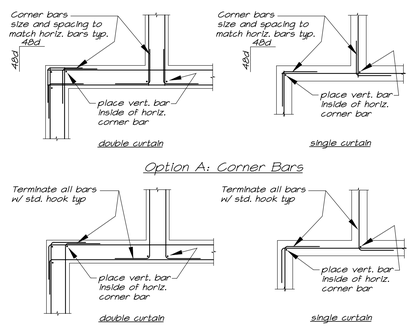

Note: At footings, "vertical bars" are the slab dowels unless other vertical bars are specified in the sections.

6/S1.3 Typical Corner Reinforcing ⅜"=1'-0"

Detail 7/S1.3 ½"=1'-0"

Typical Foundation Construction Joint

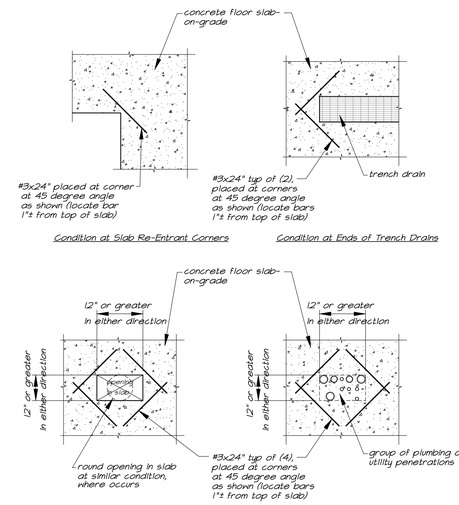

8/S1.3 Slab Reinforcing at Holes and Corners ½"=1'-0"

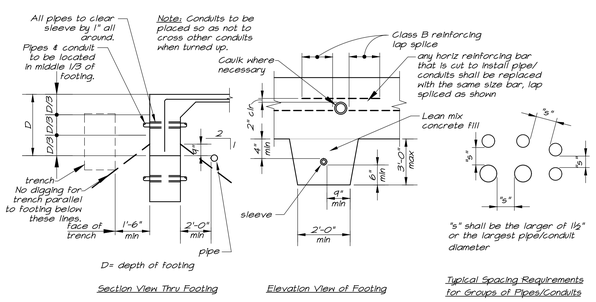

Notes:

1. Lean mix concrete fill to be placed before footing is cast. Make same width as footing and full width of pipe trench. Step footing if pipe is more than 2'-6" below bottom of footing.
2. No pipes shall be placed below spread footing, typ.
3. If pipe is in place prior to casting concrete, wrap pipe w/ compressible foam pipe wrap (1" min all around) in lieu of sleeve.

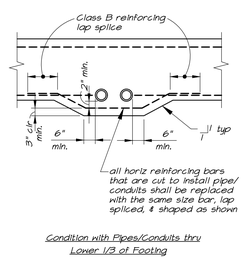

1/S1.3 Pipes & Conduits at Footings ⅜"=1'-0"

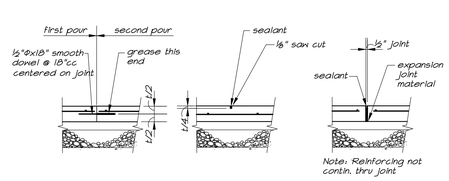

Construction Joint (C.J.) (Not to be used at the Apparatus Bay slab. For C.J. at the App. Bay slab, see 12/S1.3)

Note: Provide joints at locations as specified on sheet S2.1A. If not otherwise specified provide construction joints & control joints are recommended to be spaced not more than 24 times the slab thickness without reentrant corners & with length to width ratios not exceeding 1½:1.

2/S1.3 Slab-On-Grade Joints ⅜"=1'-0"

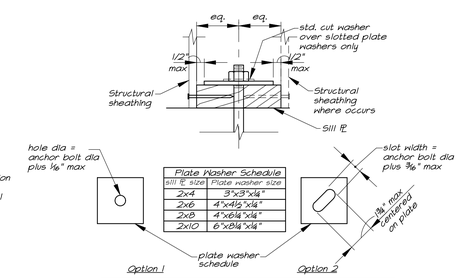

Plate Washer Schedule	
sill ℄ size	Plate washer size
2x4	3"x3"x¼"
2x6	4"x4½"x¼"
2x8	4"x6¼"x¼"
2x10	6"x8¼"x¼"

Notes:

1. A standard cut washer is required to be used over the plate washer if Option 2 is employed.
2. This detail applies to all shearwalls.
3. Per the CBC/AHC SDP96, the plate washer shall extend to within ½" of the edge of the bottom plate on the side(s) with sheathing. See the detail above.
4. If the ½" plate washer edge distance is exceeded, provide larger plate washers as required to achieve the plate washer placement shown in detail above.
5. Plate washers and nuts shall be hot-dipped galvanized or stainless steel.

3/S1.3 Shearwall Anchor Bolt Plate Washers 3"=1'-0"

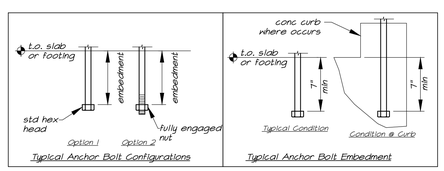

Notes:

1. Anchor bolts shall conform to ASTM F1554 Gr. 36, A307, or ASTM A36. Upset threaded bolts/rods shall not be used; use only cut-thread bolts/rods with full diameter bodies. See "Hood" notes #20 on the Typical Notes sheet.
2. Per CBC Section 2304.10.5.1, anchor bolts shall be hot dipped zinc-coated galvanized steel or mechanically deposited zinc-coated steel with coating weights per ASTM B 695, Class 55 minimum.
3. Anchor bolts depicted in this detail are for foundation sill plate anchorage subjected to shear loading only and not for use as holdown anchor bolts.
4. Anchor bolts shall be spaced not more than 48" on center. There shall be at least two bolts per piece of sill plate, and there shall be an anchor bolt located not more than 12" nor less than 4" from each end of each piece of sill plate.
5. Holdown bolts shall not be considered to act as, or replace, foundation sill plate anchor bolts.
6. All anchor bolts shall be cast in place. However, in the event that a sill plate anchor bolt is misplaced or missing, provide an ⅜"ø A36 all-threaded rod set in Simpson SET-XP adhesive with 7" minimum embedment (see detail above for examples of embedment). This note only applies to sill plate anchor bolts and is not to be used for holdown bolts.

4/S1.3 Typical Anchor Bolt Detail 3"=1'-0"

PBK
ARCHITECT PBK Architects, Inc.
PBK.com
SAN LUIS OBISPO
1327 Archer Street, Suite 110
San Luis Obispo, CA 93401
805-529-3076

CONSULTANT
MLA
STRUCTURAL ENGINEERS INC
1132 Suncast Lane, Suite 6
El Dorado Hills, CA 95762
phone: (916) 941-2425
fax: (916) 941-2429

FIRE STATION #44
COASTSIDE FIRE PROTECTION DISTRICT

501 STETSON STREET
MOSS BEACH, CA 94038
PLANNING SUBMITTAL

BID SET

KEY PLAN

PLAN NORTH TRUE NORTH

STAMP
REGISTERED PROFESSIONAL ENGINEER
JOHN M. MANDSAGER
No. 3824
Exp. 09/30/26
STRUCTURAL
STATE OF CALIFORNIA

CLIENT
COASTSIDE FIRE PROTECTION DISTRICT
PROJECT NUMBER
230137

DATE 12/05/25
DRAWN BY: GSL CHKED BY: JMM

REVISIONS

#	DESCRIPTION	DATE

TYPICAL DETAILS

This document is for plan review only

S1.3

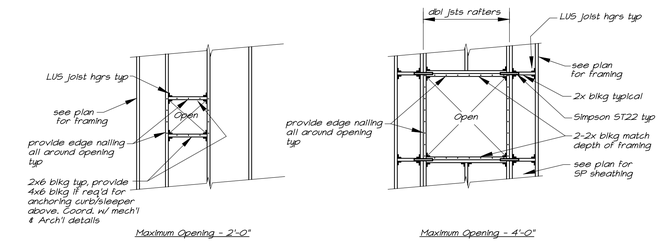

11 / S1.4 Typical Opening in Roof Diaphragm ⅜"=1'-0"

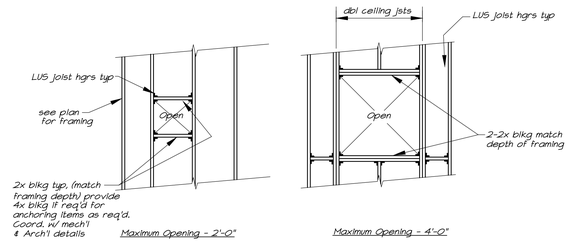

12 / S1.4 Typical Opening in Ceiling at Ducts/Access ⅜"=1'-0"

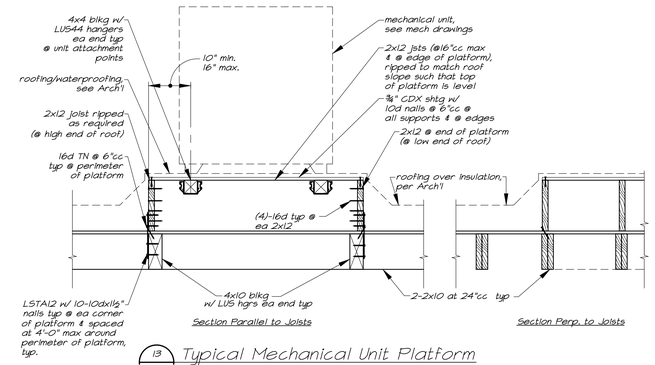

13 / S1.4 Typical Mechanical Unit Platform ¾"=1'-0"

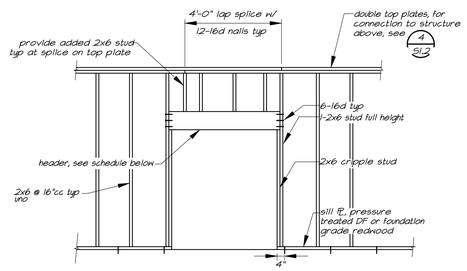

For connections at top & bottom of wall, see 4/S1.2 & 10/S1.3

Header Schedule	
width of opening	header depth "d" non-bmg
0 to 4'-0"	4"
4'-1" to 6'-6"	6"
typ unless noted otherwise	

8 / S1.4 Typical Interior Non-Structural Stud Wall Framing ⅜"=1'-0"

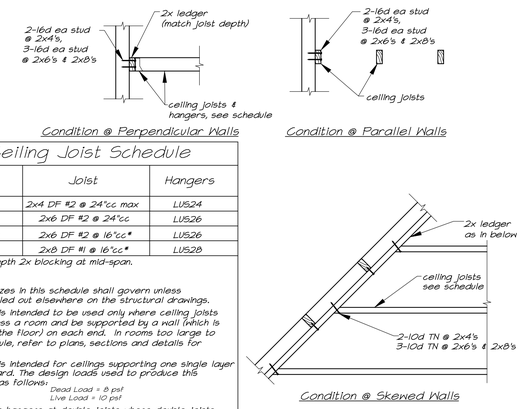

Ceiling Joist Schedule		
Span	Joist	Hangers
7'-0" max	2x4 DF #2 @ 24"cc max	LU524
11'-0" max	2x6 DF #2 @ 24"cc	LU526
13'-0" max	2x6 DF #2 @ 16"cc*	LU526
15'-3" max	2x8 DF #1 @ 16"cc*	LU528

* Provide full-depth 2x blocking at mid-span.

Schedule Notes:
1. Ceiling joist sizes in this schedule shall govern unless joists are called out elsewhere on the structural drawings.
2. This schedule is intended to be used only where ceiling joists can span across a room and be supported by a wall (which is supported by the floor) on each end. In rooms too large to use this schedule, refer to plans, sections and details for construction.
3. This schedule is intended for ceilings supporting one single layer of ⅝" gyp board. The design loads used to produce this schedule are as follows: Dead Load = 8 psf, Live Load = 10 psf
4. Use LU5 series hangers at double joists where double joists are required as noted on the plans or details.

9 / S1.4 Typical Ceiling Joists ¾"=1'-0"

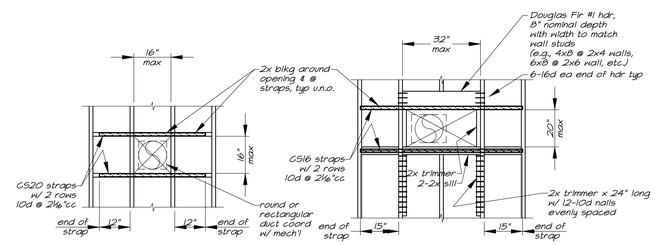

Notes:
1. Straps are to be installed over structural wall sheathing.
2. Duct penetration thru shearwalls are to occur only where specified on the plans.
3. Where shearwalls are sheathed on both sides, the specified straps are to be installed on both sides of the wall.
4. Provide sheathing edge nailing all around duct penetration typ.

10 / S1.4 Typical Duct Penetration Thru Shearwalls ½"=1'-0"

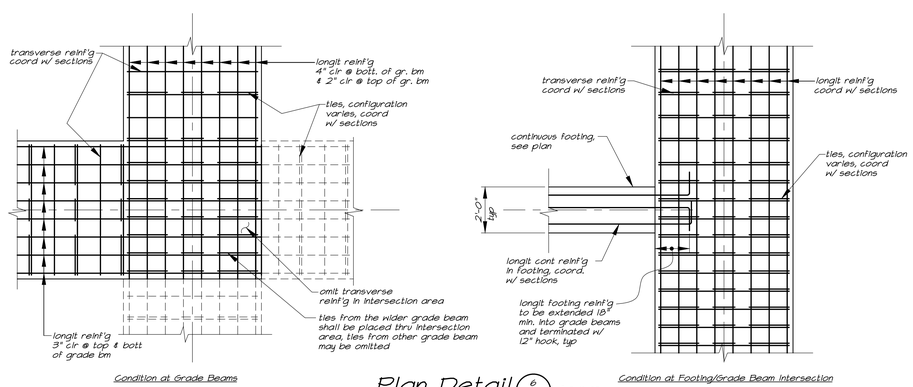

Plan Detail 6 / S1.4 ⅜"=1'-0"

Typical Continuous Footing/Grade Beam Intersections

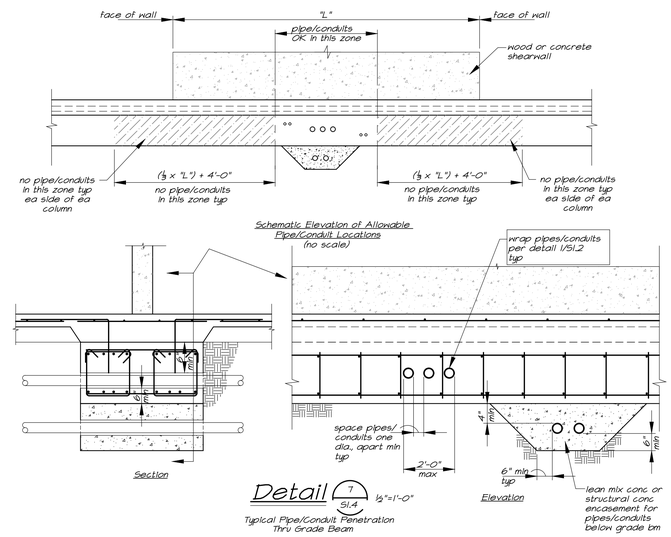

Detail 7 / S1.4 ½"=1'-0"

Typical Pipe/Conduit Penetration Thru Grade Beam

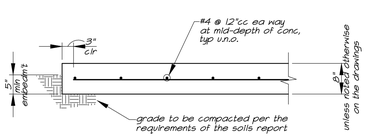

Notes:
1. This detail is intended for relatively lightweight units with a maximum weight of 800 lbs.
2. Supported units must be placed no closer than 6" from the edges of the concrete pad.

1 / S1.4 Typical Housekeeping Pad ¾"=1'-0"

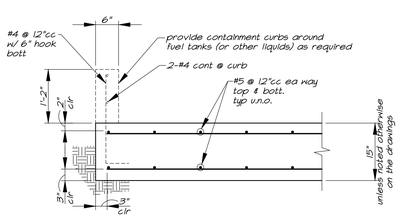

Notes:
1. This detail is intended for relatively heavy units with weights over 800 lbs. (e.g. Generator, Fuel Tank, etc.)
2. Supported units must be placed no closer than 12" from the edges of the concrete pad.

2 / S1.4 Typical Housekeeping Pad for Heavier Units ¾"=1'-0"

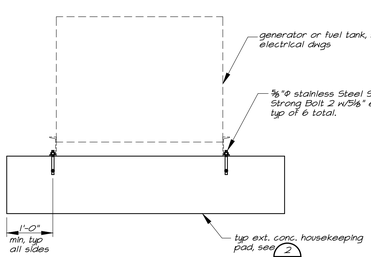

3 / S1.4 Typical Generator & Fuel Tank Anchorage ¾"=1'-0"

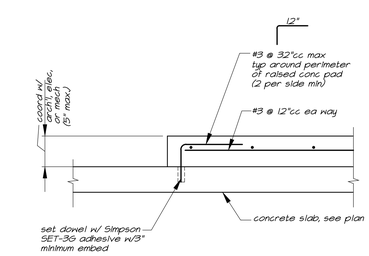

4 / S1.4 Typical Raised Concrete Pad Detail 1"=1'-0"

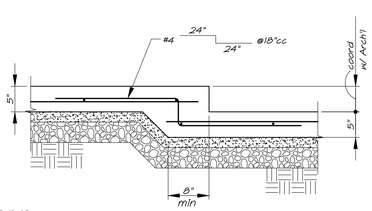

Detail 5 / S1.4 1"=1'-0"

typical depressed slab

PBK
ARCHITECT PBK Architects, Inc.
PBK.com
SAN LUIS OBISPO
1327 Archer Street, Suite 110
San Luis Obispo, CA 93401
805-529-3076

CONSULTANT
MLA
STRUCTURAL ENGINEERS INC
1132 Suncast Lane, Suite 6
El Dorado Hills, CA 95762
phone: (916) 941-2425
fax: (916) 941-2429

FIRE STATION #44
COASTSIDE FIRE PROTECTION DISTRICT

501 STETSON STREET
MOSS BEACH, CA 94038
PLANNING SUBMITTAL

BID SET

KEY PLAN
PLAN NORTH
TRUE NORTH

STAMP
REGISTERED PROFESSIONAL ENGINEER
JOHN M. MANDSAGER
No.3824
Exp.09/30/26
STRUCTURAL
STATE OF CALIFORNIA

CLIENT
COASTSIDE FIRE PROTECTION DISTRICT
PROJECT NUMBER
230137
DATE 12/05/25
DRAWN BY: GSL CHKED BY: JMM

REVISIONS

#	DESCRIPTION	DATE

TYPICAL DETAILS

This document is for plan review only

S1.4

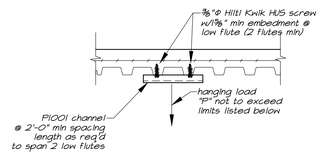

Note: "P" shall be limited to:
100# max @ 1½" deck (20 ga min)

Detail 10/S1.5 1"=1'-0"

Typical hangers from metal deck w/concrete fill

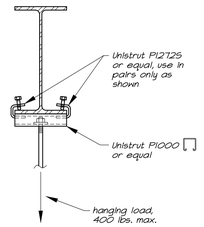

Condition at Concentric Loads

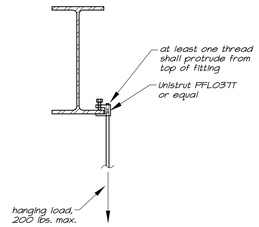

Condition at Eccentric Loads

Detail 11/S1.5 1½"=1'-0"

Typical Detail for Hanging Loads

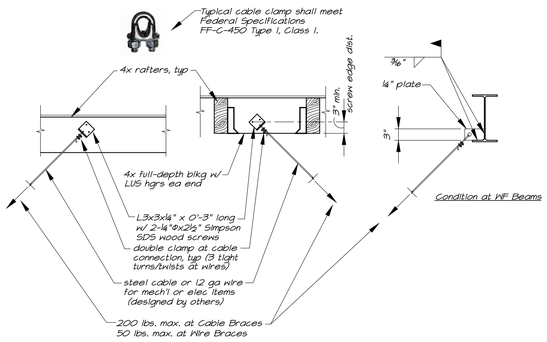

Condition at WF Beams

8/S1.5 Typical Connections for Cable or Wire Bracing at Mechanical Items 3/4"=1'-0"

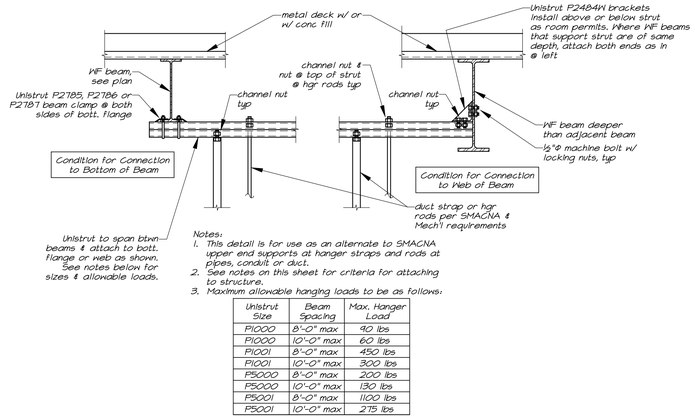

Notes:
1. This detail is for use as an alternate to SMACNA upper end supports at hanger straps and rods at pipes, conduit or duct.
2. See notes on this sheet for criteria for attaching to structure.
3. Maximum allowable hanging loads to be as follows:

Unistrut Size	Beam Spacing	Max. Hanger Load
P1000	8'-0" max	40 lbs
P1000	10'-0" max	60 lbs
P1001	8'-0" max	450 lbs
P1001	10'-0" max	300 lbs
P5000	8'-0" max	200 lbs
P5000	10'-0" max	130 lbs
P5001	8'-0" max	1100 lbs
P5001	10'-0" max	275 lbs

Notes:
The total loads from all hangers supported from a common strut are not to exceed listed max. hanger loads.

Detail 9/S1.5 1"=1'-0"

Supporting Loads from the Structure A/S1.5

1. These notes provide guidelines and limitations for supporting all mechanical, electrical, plumbing, sprinkler, or architectural items from the building structure, and for seismic bracing for all such items.
2. Design and install all support and bracing systems except as noted. Provide for attachment to portions of the building structure capable of bearing the loads imposed. Design systems to not overstress the building structure.
3. The Contractor is not required to design support and bracing for items for which the contract documents provide specific attachment, support, and bracing. Seismic bracing is not required for the following items:
   a. Gas piping less than 1 inch inside diameter.
   b. Piping for boilers and mechanical equipment less than 1.25" inside diameter.
   c. All other piping less than 2.5" inside diameter, unless racked together.
   d. All piping and duct suspended by individual hangers 12" or less in length.
   e. All rectangular air handling ducts less than 6 square feet in cross sectional area.
   f. All round air handling ducts less than 28" in diameter.
   g. All electrical conduits less than 2.5" inside diameter, unless racked together.
4. Contractor shall design and install all support systems to comply with the requirements of the 2016 California Building Code Chapter 16 and, Minimum Design Loads for Buildings and Other Structures - ASCE/SEI 7-10. Calculations shall include an Importance Factor, I_p= 1.50. See structural drawings for other seismic design criteria.
5. For supported and seismic bracing design engage the services of a Structural Engineer licensed in California.
6. For guidelines regarding seismic bracing for mechanical, electrical and plumbing systems, refer to the Sheet Metal and Air Conditioning Contractors National Association, Inc. (SMACNA), "Guidelines for Seismic Restraints of Mechanical Systems and Plumbing Piping Systems".
7. Furnish all substructures and fasteners required to comply with the limitations given below. Use materials as specified in the various sections and as appropriate to the use.
8. All exterior materials: hot dipped or galvanized stainless steel.
9. All connections to structure shall be made by the use of hardware with bolts, welds or other positive attachments. At WF Beams, clamps shall engage from both sides of beam flanges.
10. The General Contractor shall coordinate the load requirements from all sub-contractors so that no combination of loads exceeds the limitations given below without written approval.
11. All items referred to in these notes (mechanical, electrical, sprinklers, etc.) shall not be supported by, or braced to, suspended or framed ceiling structures. Ceilings have not been designed to support or brace such items.
12. Design and install seismic bracing so as not to ground out vibration and sound isolation items.
13. Maximum Vertical Loading: Attach no loads greater than the following without specific approval of the Structural Engineer:
    a. Wood framed roof and floor structures - acoustical tile and gypsum board ceilings, minor piping, ducting and electrical conduits:
       I.) Maximum total load not to exceed 5.0 psf
    b. Wood roof trusses - acoustical tile and gypsum board ceilings, minor piping, ducting and electrical conduits:
       I.) Maximum total load not to exceed 5.0 psf
       II.) Maximum total load on a single truss shall not to exceed 400 lbs.
    c. Wood beams and girders: water, gas, and sprinkler piping, electrical conduits, ducting and trapeze of same items:
       I.) Maximum total load not to exceed 30 plf
       II.) Maximum total load on a single beam shall not to exceed 400 lbs.
    d. Metal deck without concrete fill - acoustical tile and gypsum board ceilings and minor piping, ducting conduit and bracing as noted below. Maximum ceiling weight = 3.5 psf. Maximum wire hanger load = 60 lbs. to be spaced no closer than 8'-0"cc each way.
    e. Metal deck with concrete fill - Items as indicated for metal deck without concrete fill above, plus electrical conduits, gas piping and ducting not exceeding 3.0 psf and bracing as noted below. Maximum point load = 200 lbs. to be spaced no closer than 8'-0"cc each way. Mechanical units hung from concrete-filled deck shall not exceed 500 lbs.
    f. Steel beams and girders: water and gas piping, electrical conduits, ducting and trapeze of same not to exceed 3.0 psf and bracing as noted below. Maximum load on a single span = 600 lbs. Mechanical units hung from beams shall not exceed 1000 lbs. unless specifically indicated on structural plans Concentric connections are required for hanger loads in excess of 100 lbs.
14. Maximum Seismic Bracing Loads: Attach no bracing loads greater than the following without specific approval of the Structural Engineer:
    a. Wood framed roof and floor structures - connections made near (within 4" of) wood sheathed diaphragm:
       I.) For bracing loads parallel to framing members, maximum total seismic bracing load shall not to exceed 100 lbs. (ASD)
       II.) For bracing loads perpendicular to framing members, maximum total seismic bracing load shall not to exceed 50 lbs. (ASD)
    b. Wood beams and girders- maximum bracing loads in a single span shall be limited to the following:
       I.) For bracing loads parallel to beams, maximum total seismic bracing load shall not to exceed 200 lbs. (ASD)
       II.) For bracing loads perpendicular to beams with connection made near (within 4" of) wood sheathed diaphragm, maximum total seismic bracing load shall not to exceed 100 lbs. (ASD)
       III.) For bracing loads perpendicular to beams with connection not made near (within 4" of) wood sheathed diaphragm, maximum total seismic bracing load shall not to exceed 50 lbs. (ASD)
       IIII.) Bracing shall not attach to beams/girders that also support hanging loads as noted above.
    c. Metal deck without concrete fill - wire bracing for suspended ceiling only.
    d. Metal deck with concrete fill - maximum bracing load shall not exceed 200 lbs. spaced no closer than 8'-0"cc to adjacent bracing or hangers
    e. Steel beams and girders - maximum bracing loads in a single span shall be limited to the following:
       Brc'g perpendicular to WF beams/girders and attached to the top flange = 600 lbs.
       Brc'g perpendicular to WF beams/girders and attached to the bottom flange = 100 lbs.
       Brc'g parallel to WF beams/girders and attached to the bottom flange = 600 lbs.
       Brc'g shall not attach to beams/girders that also support hanging loads as noted above.
15. For typical hanging load and bracing details, see details on this sheet.

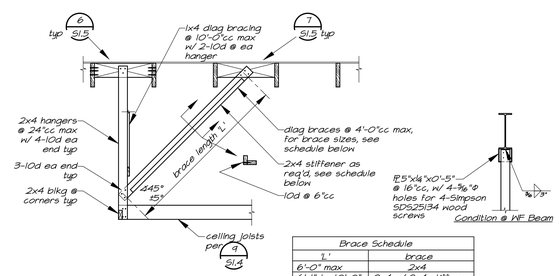

Condition @ WF Beam

Brace Schedule	
"L"	brace
6'-0" max	2x4
6'-1" to 10'-0"	2x4 w/ 2x4 stiffener
10'-1" to 14'-0"	2x6 w/ 2x4 stiffener

5/S1.5 Typical Hanging Soffit Detail ½"=1'-0"

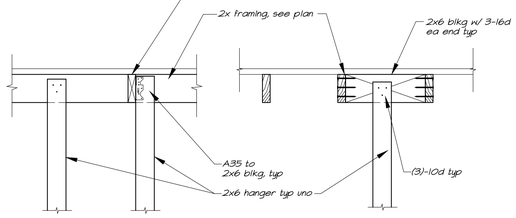

Hanger Lines Perpendicular to Framing

Hanger Lines Parallel to Framing

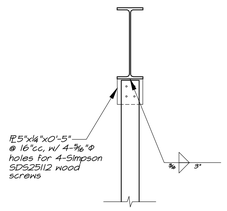

Condition @ WF Beam

Detail 6/S1.5 1"=1'-0"

Typical Wood Hanger Connection

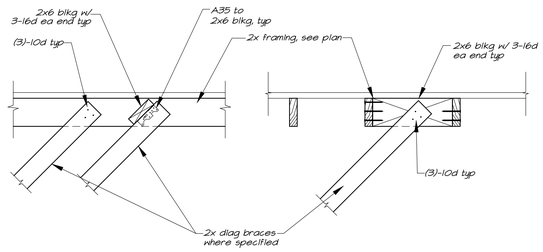

Braces Parallel to Framing

Braces Perpendicular to Framing

Detail 7/S1.5 1"=1'-0"

Typical 2x Bracing Connections

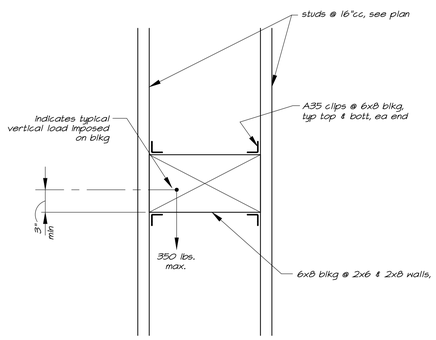

1/S1.5 Typical Blocking for Wall-Mounted Equipment 1½"=1'-0"

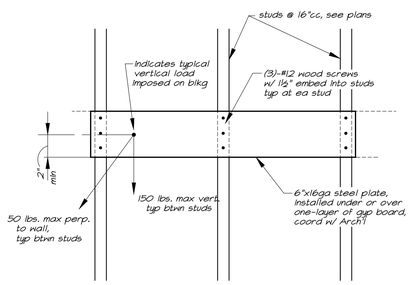

2/S1.5 Typical Plate for Wall-Mounted Equipment 1½"=1'-0"

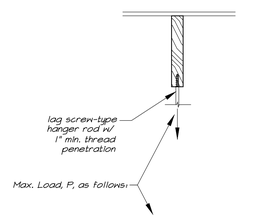

Lag Screw Diameter (inches)	Max. Load, P, (pounds)
¼"	100 lbs.

3/S1.5 Typical Hanging Loads to 2x Framing Connection 1½"=1'-0"

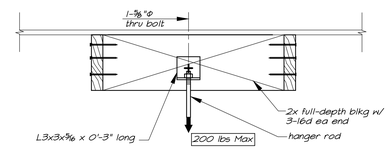

At Parallel Condition

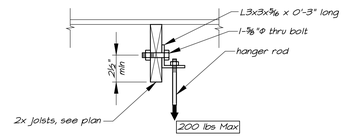

At Perpendicular Condition

4/S1.5 Typical Hanger Rod Connection 1½"=1'-0"

PBK
ARCHITECT PBK Architects, Inc. PBK.com
SAN LUIS OBISPO
1327 Archer Street, Suite 110
San Luis Obispo, CA 93401
805-529-3076

CONSULTANT
MLA
STRUCTURAL ENGINEERS INC
1132 Suncast Lane, Suite 6
El Dorado Hills, CA 95762
phone: (916) 941-2425
fax: (916) 941-2429

FIRE STATION #44
COASTSIDE FIRE PROTECTION DISTRICT
501 STETSON STREET
MOSS BEACH, CA 94038
PLANNING SUBMITTAL

COASTSIDE FIRE PROTECTION DISTRICT EST 2000

BID SET

KEY PLAN
PLAN NORTH
TRUE NORTH

STAMP
REGISTERED PROFESSIONAL ENGINEER
JOHN M. MANDSAGER
No.3824
Exp.09/30/26
STRUCTURAL
STATE OF CALIFORNIA

CLIENT
COASTSIDE FIRE PROTECTION DISTRICT
PROJECT NUMBER 230137
DATE 12/05/25
DRAWN BY: GSL CHKED BY: JMM

REVISIONS

#	DESCRIPTION	DATE

TYPICAL DETAILS

This document is for plan review only

S1.5

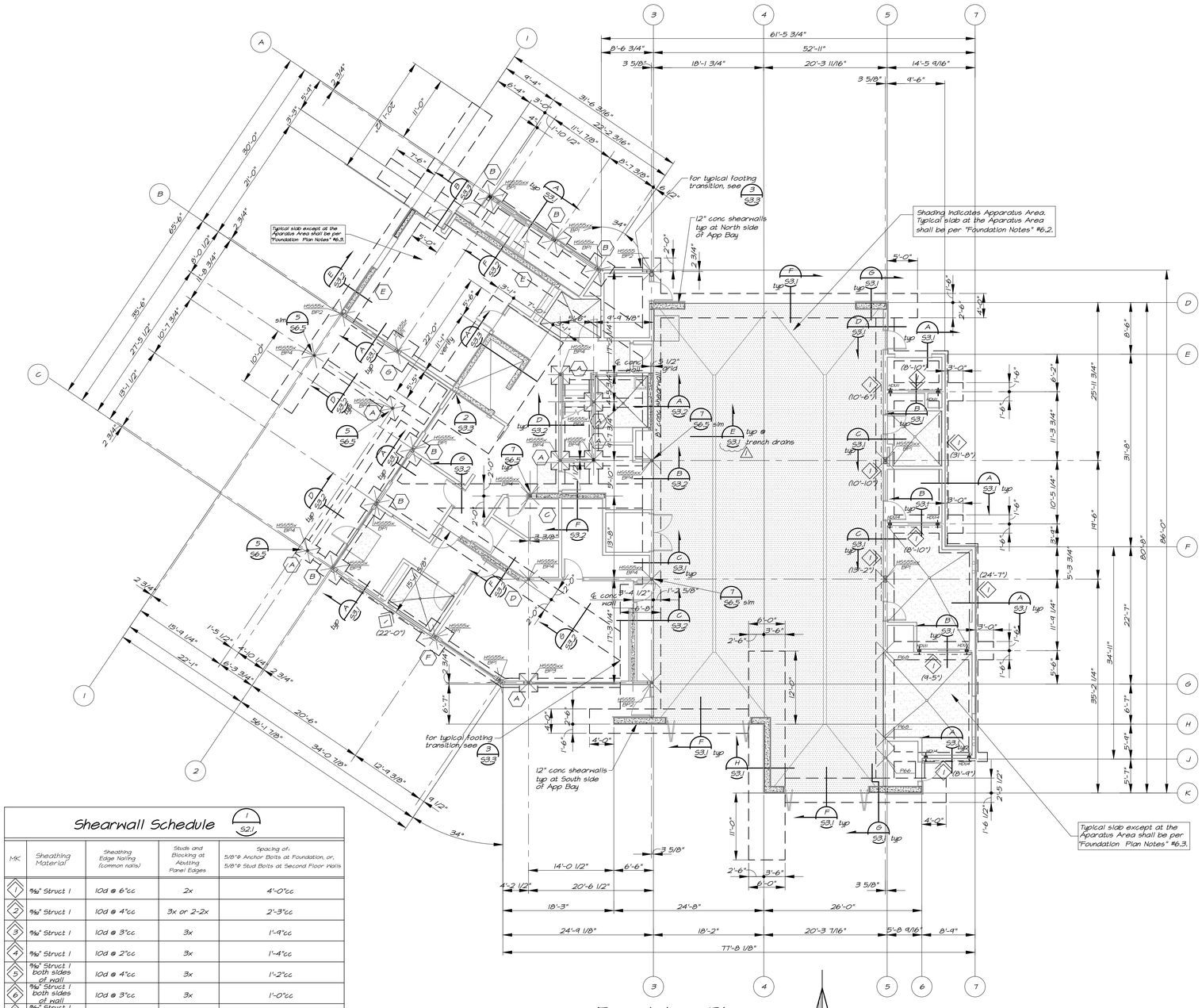

Foundation Plan

1/8"=1'-0"

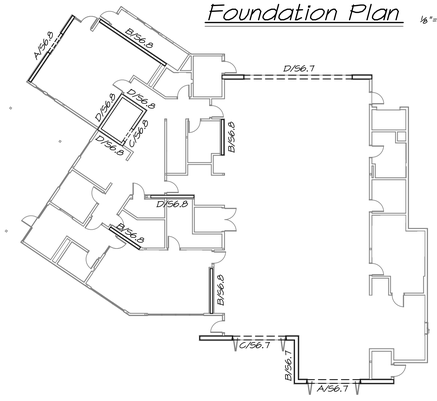

Concrete Wall Elevation Keyplan

3/S2.1 1/8"=1'-0"

Shearwall Schedule

1/S2.1

MK	Sheathing Material	Sheathing Edge Nailing (common nails)	Studs and Blocking at Abutting Panel Edges	Spacing of: 5/8"ø Anchor Bolts at Foundation, or, 5/8"ø Stud Bolts at Second Floor Walls
1	⅝" Struct 1	10d @ 6"cc	2x	4'-0"cc
2	⅝" Struct 1	10d @ 4"cc	3x or 2-2x	2'-3"cc
3	⅝" Struct 1	10d @ 3"cc	3x	1'-9"cc
4	⅝" Struct 1	10d @ 2"cc	3x	1'-4"cc
5	⅝" Struct 1 both sides of wall	10d @ 4"cc	3x	1'-2"cc
6	⅝" Struct 1 both sides of wall	10d @ 3"cc	3x	1'-0"cc
7	⅝" Struct 1 both sides of wall	10d @ 2"cc	3x	10"cc

Notes:

1. Field nailing (nailing to intermediate framing members) to be 10d common or galvanized box nails spaced as follows:
   a) 6"cc where framing members are spaced at 24"cc
   b) 12"cc where framing members are spaced at 16"cc
2. Holdown bolts shall not be considered to replace (or act as) anchor bolts.
3. For anchor bolt details see 4/S1.3
4. All anchor bolts at shearwalls shall have plate washers per the details specified in the shearwall schedule. Anchor bolts at non-sherawalls shall have standard cut washers between the wood sill plate and the nut. For plate washer detail see 3/S1.3
5. Where sheathing is applied to both faces of a wall, the sheathing joints shall be offset to fall on different framing members.
6. If not indicated otherwise, nail sheathing at walls per 1
7. Nailing at abutting panel edges at 3x members (and 2-2x members, as permitted by the shearwall schedule) shall be staggered. Nails shall be located at least ⅜" from panel edges and ⅜" from the framing member edges.
8. All sill plate nailing shall be staggered and nails shall be located at least ⅜" from panel edges and ⅜" from the framing member edges.
9. Nails shall have the following minimum dimensions (measured before application of any protective coatings):

Nail	Diameter	Length
10d common	0.148"	3"
10d box	0.128"	3"

10. Where permitted by the shearwall schedule above, 2-2x studs and blocking used at abutting panel edges shall be nailed together with 16d nails spaced the same as the shearwall nailing specified in the schedule for that wall.
11. Where the extent of shear wall does not coincide with the entire extent of adjacent wall faces, provide sheetrock or wood furring such that the substrate for the finishes is flush.

Footing Schedule

2/S2.1

MK	Size	Thickness (Depth)	Reinforcing	Detail/Section
A	3'-0" square	18"	4-#5 ea way bott.	
B	4'-0" square	18"	5-#5 ea way bott.	
C	4'-0" x length per plan	2'-6"	2 - layers (B)-#6 longitudinal bars top & bott. (32 total longitnal bars)	H/S3.3
D	4'-0" x length per plan	2'-6"	2 - layers (B)-#7 longitudinal bars top & bott. (32 total longitnal bars)	H/S3.3
E	4'-0" x length per plan	2'-6"	2 - layers (B)-#8 longitudinal bars top & bott. (32 total longitnal bars)	H/S3.3
F	4'-6" square	18"	6-#6 ea way bott.	
G	5'-0" square	18"	7-#6 ea way bott.	

Foundation Plan Notes:

1. Coordinate all dimensions with architectural drawings. Notify Architect of any discrepancies for resolution prior to proceeding.
2. See sheet S1.1 thru S1.5 for typical notes and details. These notes and details apply to all construction unless noted or detailed otherwise.
3. Posts and columns:
   A.) Indicates wood posts typical uno. See plan for sizes.
   B.) Indicates steel HSS columns. See plan for sizes.
   C.) Unless noted otherwise, support all 4x beams on 4x6 posts and all 6x and 5¼"x beams on 6x6 posts
   D.) Wood Post & Steel Column Schedule:

Mark	Post Size
P226	2-2x6
P228	2-2x8
P46	4x6
P66	6x6
P68	6x8 (rip as read to fit in 2x8 wall)

Mark	Column Size
HSS44	HSS4x4x¼"
HSS55	HSS5x5x¼"
HSS55x	HSS5x5x5/16"
HSS55xx	HSS5x5x⅜"

   E.) Posts shall be of lumber grades as specified on sheet S1.1 unless noted otherwise on the plans or in the schedule above.
4. All anchor bolts, holdown bolts, straps and other hardware embedded in concrete must be securely tied in place prior to foundation inspection.
5. Dimensions shown are to face-of-stud (FS) unless noted otherwise. Dimensions to face-of-concrete (FC) for formwork purposes shall be coordinated with the structural sections and the architectural drawings.
6. Construction of concrete floor slabs shall conform to the following:
   6.1 General Requirements for All Concrete Floor Slabs:
   A.) Concrete floor slabs shall be moist cured for a minimum of 3 days unless specified for a longer period of time in the Specifications.
   B.) Floor slabs shall be cast directly onto a 15 mil. vapor barrier. The vapor barrier should be properly lapped and sealed as well as sealed around all plumbing lines, conduits, and other openings. ASTM E1643 should be utilized as a guideline for the installation of the vapor retarder. The vapor barrier shall conform to Class A vapor retarder in accordance with ASTM E 1745-09.
   C.) Slab subgrade surfaces shall be proof-rolled to provide a smooth unyielding surface for slab support.
   D.) Subgrade soils shall be prepared in strict accordance with the Geotechnical Report.
   E.) Also see "Concrete" notes on sheet S1.1, for additional requirements for floor slabs on ground.
   6.2 Requirements for Concrete Floor Slabs in the Apparatus Area:
   A.) Concrete floor slabs shall be 12" thick and reinforced with #5 spaced at 12"cc each way, top and bottom of slab.
   B.) The upper 12 inches of subgrade should be scarified, moisture conditioned to above optimum and compacted to at least 95% relative compaction.
   C.) Slabs shall be underlain with 12" of Class 2 Aggregate Base compacted to at least 95% relative compaction, near optimum moisture content.
   6.3 Requirements for Concrete Floor Slabs except those in the Apparatus Area:
   A.) Concrete floor slabs shall be 5" thick and reinforced with #4 spaced at 16"cc each way, at mid-depth of slab.
   B.) Slabs shall be underlain with 4" of ½" or ¾" crushed rock with no more than 5% passing the No. 200 sieve to serve as a capillary break.
7. For concrete floor joint plan, see 1/S2.1A
8. Indicates sloped and/or depressed slabs & floor drains, coordinate locations & extents w/ Arch'l drawings. At sloped/depressed slabs, specified slab thickness as well as underlayment thickness shall be maintained.
9. All interior non-bearing partition walls are to be built full-hieght to the bottom of the structural framing above, and connected per details 10/S1.3 & 4/S1.3
10. Concrete shearwalls are indicated on the plans per the following:
    Indicates 12" concrete shearwalls
    Indicates 8" concrete shearwalls
11. Site work and pad preparation to be done in strict accordance with the Specifications and Geotechnical Investigation/Report.
12. (1) (5'-0") Indicates shearwall type and minimum shearwall length, see Shearwall Sched. 1/S2.1
13. Unless otherwise designated as shearwalls, all exterior wood walls shall be sheathed with 15/32" Struct 1 sheathing nailed with 10d @ 6"cc at edges and 10d @ 12" cc at field, typical. See the plan for those walls designated as shearwalls.
14. ◊ Indicates Simpson holdowns as follows:

Mark	Holdown	Mark	Holdown
HDU2	HDU2-SDS2.5	HDU8	HDU8-SDS2.5
HDU4	HDU4-SDS2.5	HDU11	HDU11-SDS2.5
HDU5	HDU5-SDS2.5	HDU14	HDU14-SDS2.5

    see 1/S6.1 2/S6.1
15. For typical pipe/conduit penetrations through footings, see 1/S1.3 7/S1.4
16. Provide nailers at all HSS columns per 11/S1.3
17. Coordinate locations of all interior raised concrete curbs with the Architectural drawings. At shearwall locations, construct the curbs per the structural sections; at non-shearwall locations, construct the curbs per 9/S1.3
18. SPECIAL CONSTRUCTION SEQUENCING NOTE:
    The elevator pit footing and walls must be constructed and the area backfilled with compacted engineered fill prior to excavating for, or constructing the adjacent (within 1'-0" of the elevator pit excavation) footings.
19. (A) indicates footing types, for requirements see 2/S2.1
20. Base plates for steel columns are indicated on the plans as BP1, BP2, BP3, & BP4. See the following details for each type:

BP1, BP2, BP3 -	6/S6.5
BP4 -	7/S6.5 & 8/S6.5

21. For concrete floor slab sequencing plan, see 2/S2.1A

PBK
ARCHITECT PBK Architects, Inc.
PBK.com
SAN LUIS OBISPO
1327 Archer Street, Suite 110
San Luis Obispo, CA 93401
805-529-3076

CONSULTANT
MLA
STRUCTURAL ENGINEERS INC
1132 Suncast Lane, Suite 6
El Dorado Hills, CA 95762
phone: (916) 941-2425
fax: (916) 941-2429

FIRE STATION #44
COASTSIDE FIRE PROTECTION DISTRICT

501 STETSON STREET
MOSS BEACH, CA 94038
PLANNING SUBMITTAL

BID SET

KEY PLAN
PLAN NORTH
TRUE NORTH

STAMP
REGISTERED PROFESSIONAL ENGINEER
JOHN M. MANDSAGER
No.3824
Exp.09/30/26
STRUCTURAL
STATE OF CALIFORNIA

CLIENT
COASTSIDE FIRE PROTECTION DISTRICT
PROJECT NUMBER
230137
DATE 12/05/25
DRAWN BY: GSL CHKED BY: JMM

REVISIONS

#	DESCRIPTION	DATE

This document is for plan review only

FOUNDATION PLAN

S2.1

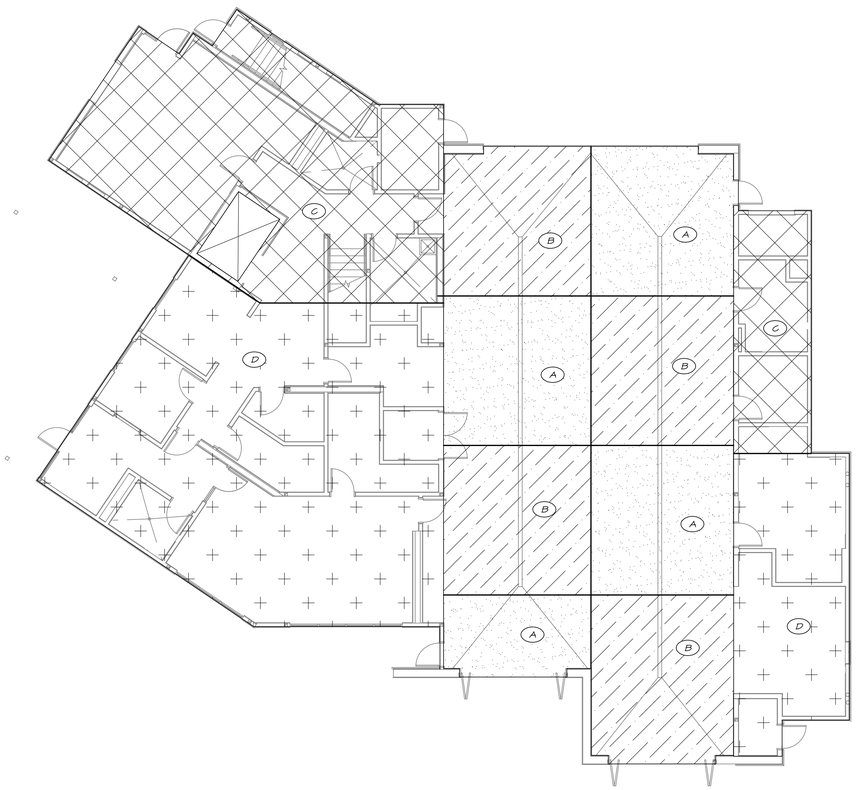

Recommended Floor Slab Pour Sequencing Plan (2 / S2.1A)

1/8"=1'-0"

North

Plan Notes:

1. The slab is recommended to be cast in separate pours, as is shown on the sequencing plan as areas "A", "B", "C" and "D". Unless shown otherwise in the sections, provide a construction joint between the pours per (2 / S1.3) (see Note 4 below).
2. Coordinate the concrete surface finishing required with the Architectural Finish Schedule and the specifications.
3. Provide joints in the concrete floor slabs per (1 / S2.1A)
4. For construction joint detail for the Apparatus Bay slab, see (12 / S1.3)

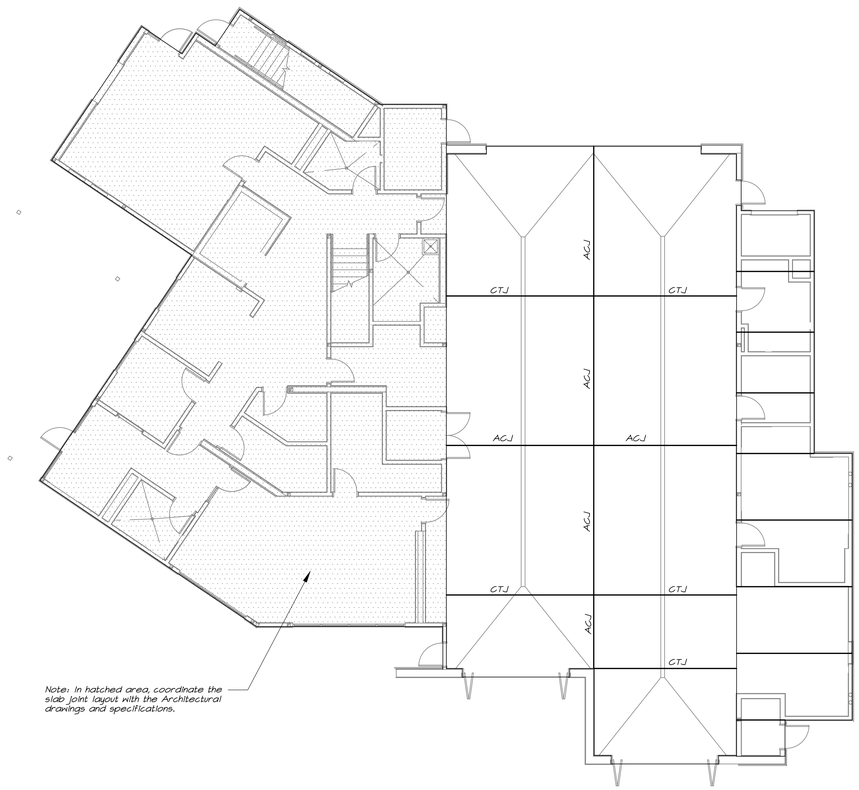

Recommended First Floor Concrete Slab Joint Plan (1 / S2.1A)

1/8"=1'-0"

North

Plan Notes:

1. "ACJ" indicates construction joints at the Apparatus Bay slab. See (12 / S1.3)
2. For typical slab joint details, see (2 / S1.3)
3. Typical slab joints are identified as follows:
   "ACJ" indicates construction joint at the Apparatus Bay slab.
   "C.J" indicates construction joint at a typical slab not at the App Bay.
   "CTJ" indicates control joint.
4. Unless noted otherwise slab joints shown are CTJ's.
5. For pour sequencing for the concrete floor slabs, see (2 / S2.1A)
6. Prior to casting floor slabs, a control joint plan shall be submitted to the Architect for approval.

PBK

ARCHITECT PBK Architects, Inc.
PBK.com

SAN LUIS OBISPO
1327 Archer Street, Suite 110
San Luis Obispo, CA 93401
805-529-3076

CONSULTANT
MLA
STRUCTURAL ENGINEERS INC
1132 Suncast Lane, Suite 6
El Dorado Hills, CA 95762
phone: (916) 941-2425
fax: (916) 941-2429

FIRE STATION #44
COASTSIDE FIRE PROTECTION DISTRICT

501 STETSON STREET
MOSS BEACH, CA 94038
PLANNING SUBMITTAL

BID SET

KEY PLAN

PLAN NORTH
TRUE NORTH

STAMP
REGISTERED PROFESSIONAL ENGINEER
JOHN M. MANDSAGER
No.3824
Exp.09/30/26
STRUCTURAL
STATE OF CALIFORNIA

CLIENT
COASTSIDE FIRE PROTECTION DISTRICT

PROJECT NUMBER
230137

DATE 12/05/25

DRAWN BY: GSL CHKED BY: JMM

REVISIONS

#	DESCRIPTION	DATE

SLAB POUR SEQUENCING & SLAB JOINT PLANS

This document is for plan review only

S2.1A

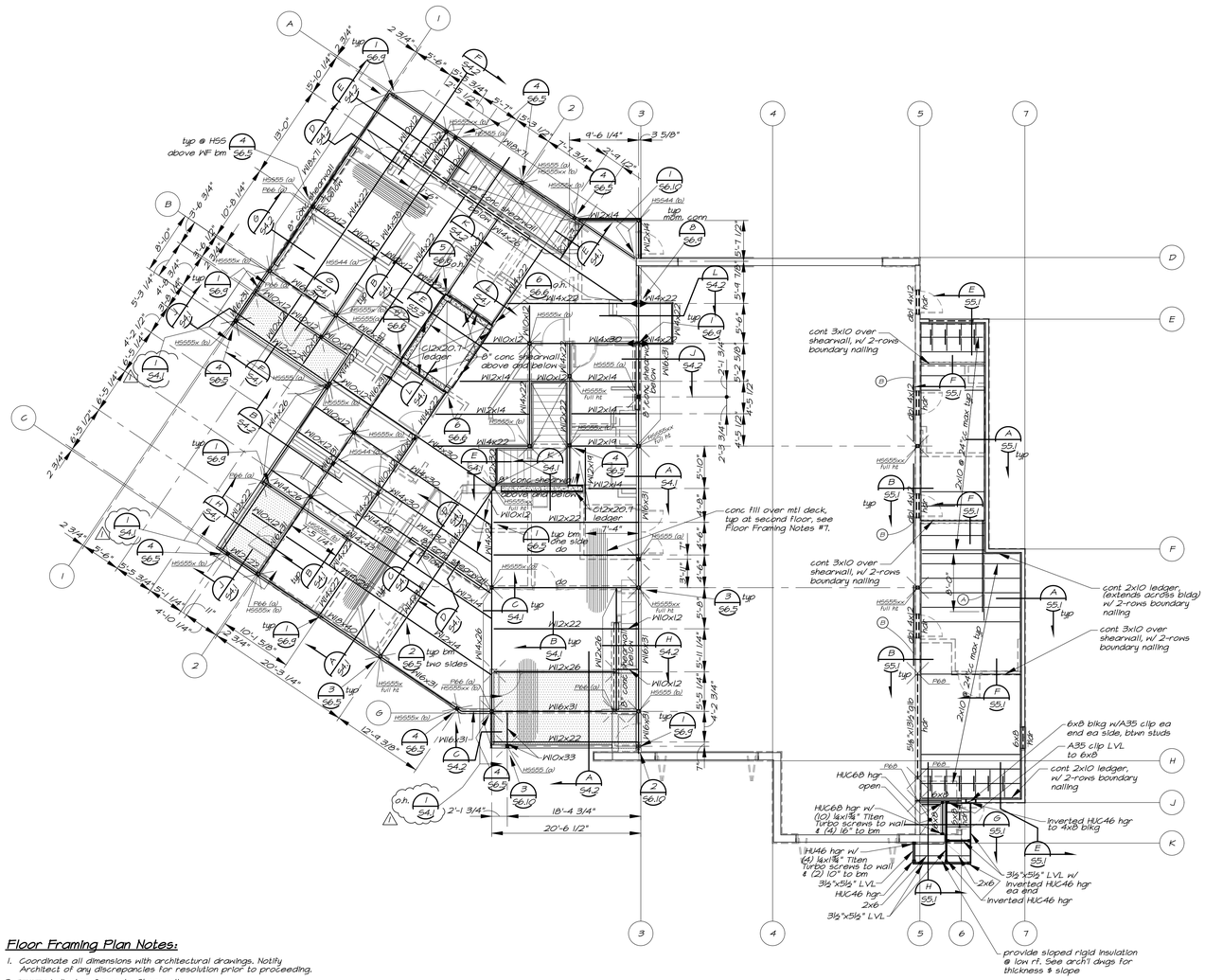

Second Floor & Low Roof Framing Plan

1 / S2.3 — 1/8"=1'-0"

North

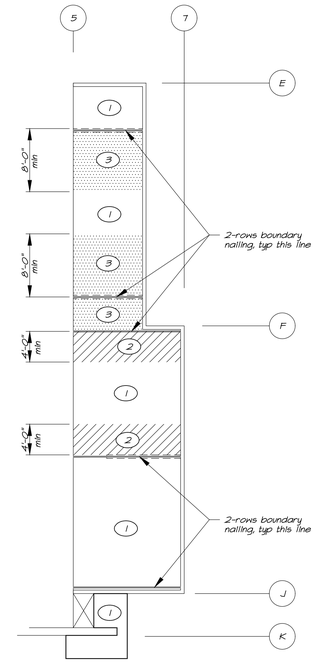

Diaphragm Nailing Schedule

3 / S2.3

MK	Material	edge nailing	boundary nailing	blocking required at unsupported edges
1	19/32" Struct I	10d @ 6"cc	N/A	not req'd
2	19/32" Struct I	10d @ 6"cc	N/A	2x min.
3	19/32" Struct I	10d @ 6"cc	10d @ 4"cc	2x min.
4	19/32" Struct I	10d @ 4"cc	10d @ 2 1/2"cc	2x min.

NOTES:
1. Sheathing to be staggered as shown on the plan
2. Field nailing to be 10d @ 12"cc typical.
3. Boundary nailing to occur at all ledgers, plates and blkg at walls and at all other locations shown on the key plans and sections.
4. 10d nails shall have a minimum shank diameter of 0.148" and shall have a minimum penetration into framing members of 1 1/2".
5. Provide 2x blocking at unsupported panel edges as noted as noted in the schedule. Blocking to be nailed to framing members w/ 3-16d TN each end, typ.

Low Roof Diaphragm Keyplan

3 / S2.3 — 1/8"=1'-0"

North

Collector/Strap Tie Connection Schedule

2 / S2.3

MK	Connection	Detail or Section	Notes
A	CS20 strap x 12'-0" w/ 2 rows 10d nails @ 2 1/16"cc, (fill all holes) Nail to ledger and 2x blkg as shown on plan.	----	See plan for placement. Provide 2x4 blkg w/ (2)-16d TN ea end typ at strap.
B	On wall, CMSTC16 strap x 12'-0"w/ (2) rows 10d nails @ 1 1/2" cc typ, (fill all holes).	----	Strap to be centered on, and nailed to the header. Provide 4x4 blkg in wall in line with the header at the strap, typ.

Floor Framing Plan Notes:

1. Coordinate all dimensions with architectural drawings. Notify Architect of any discrepancies for resolution prior to proceeding.
2. ▨ Indicates Concrete Shearwalls.
3. All first floor walls at the perimeter of the second floor area shall be in place prior to constructing the second floor walls above.
4. ⊗ Indicates steel strap holdowns for shearwalls above, typical at 9 locations, see 1 / 26.9
5. Provide nailers at all HSS columns per 11 / S1.3
6. Top of slab at second floor level is at +12'-0". Top of steel elevation = +11'-7 1/4" typical unless noted otherwise.
7. Entire second floor area shall be constructed with 1 1/2"x18ga B-type Formlok floor deck with 3 1/4" of light weight concrete fill (4 7/8" total thickness). Deck shall have factory-punched vent tabs to provide 1/8 venting. Deck shall be 2-span minimum, typical. All concrete fill over metal deck shall be reinforced with 6x6 - W2.9xW2.9 WWF placed at mid-depth, typical. For typical deck connections, see A / 26.9. See 2 / S2.3A for deck orientation.
8. 3/4"Φ shear connectors shall be provided at all beams receiving metal deck and concrete fill. The shear connectors shall be uniformly spaced at 12"cc max. See 1 / 26.9
9. See sheet S1.1 thru S1.5 for typical notes and details. These notes and details apply to all construction unless noted or detailed otherwise.
10. Verify all openings in floor with Architectural and Mechanical drawings. For details at penetrations in metal deck see, 7 / 26.9 & 8 / 26.9.
11. Posts and columns:
    - A) Indicates wood posts typical uno. See plan for sizes.
    - B) Indicates steel HSS columns. See plan for sizes.
    - C) Unless noted otherwise, support all 4x beams on 4x6 posts and all 6x and 5 1/4"x beams on 6x6 posts
    - D) Wood Post & Steel Column Schedule:

Mark	Post Size
P226	2-2x6
P228	2-2x8
P46	4x6
P66	6x6

Mark	Column Size
HS544	HSS4x4x1/4"
HS555	HSS5x5x1/4"
HS555x	HSS5x5x5/16"
HS555xx	HSS5x5x7/16"

    - E) Posts shall be of lumber grades as specified on sheet S1.1 unless noted otherwise on the plans or in the schedule above.
12. All interior non-bearing partition walls are to be built full-hieght to the bottom of the structure and connected per details 10 / S1.3 & 4 / S1.2
13. ◀▶ Indicates Moment connection. See 8 / 26.9
12. For Typical double header detail See 10 / S1.2
13. Coordinate locations of all interior raised concrete curbs with the Architectural drawings. At shearwall locations, construct the curbs per the structural sections; at non-shearwall locations, construct the curbs per 1 / S4.1

PBK

ARCHITECT PBK Architects, Inc.
PBK.com
SAN LUIS OBISPO
1327 Archer Street, Suite 110
San Luis Obispo, CA 93401
805-529-3076

CONSULTANT
MLA
STRUCTURAL ENGINEERS INC
1132 Suncast Lane, Suite 6
El Dorado Hills, CA 95762
phone: (916) 941-2425
fax: (916) 941-2429

FIRE STATION #44
COASTSIDE FIRE PROTECTION DISTRICT

501 STETSON STREET
MOSS BEACH, CA 94038
PLANNING SUBMITTAL

COASTSIDE FIRE PROTECTION DISTRICT ESTD 1947

BID SET

KEY PLAN — PLAN NORTH / TRUE NORTH

STAMP
REGISTERED PROFESSIONAL ENGINEER
JOHN M. MANDSAGER
No.3824
Exp.09/30/26
STRUCTURAL
STATE OF CALIFORNIA

CLIENT
COASTSIDE FIRE PROTECTION DISTRICT
PROJECT NUMBER
230137
DATE 12/05/25
DRAWN BY: GSL CHKED BY: JMM

REVISIONS

#	DESCRIPTION	DATE

This document is for plan review only

SECOND FLOOR & LOW ROOF FRAMING PLAN

S2.2

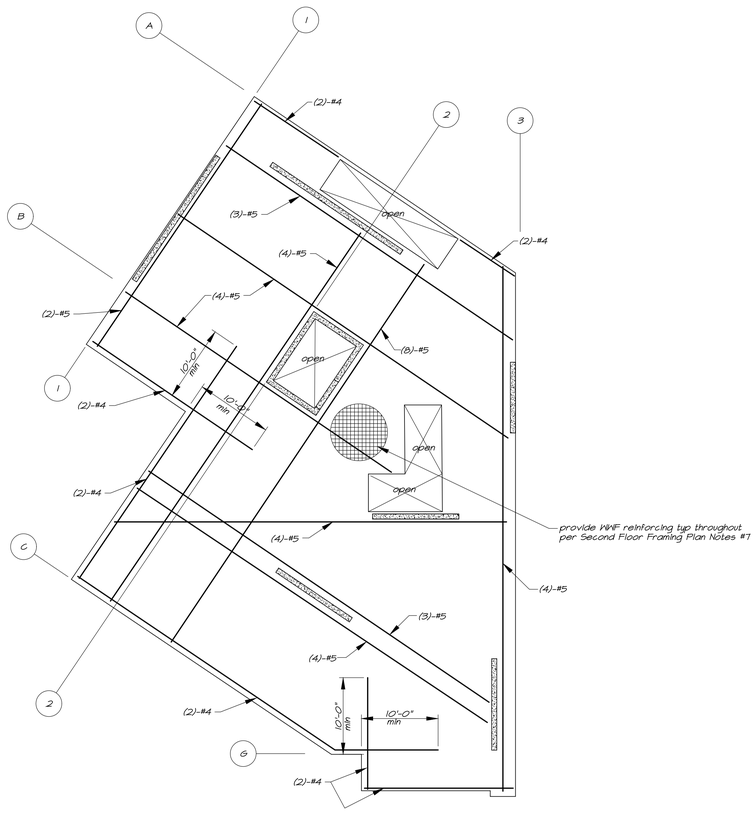

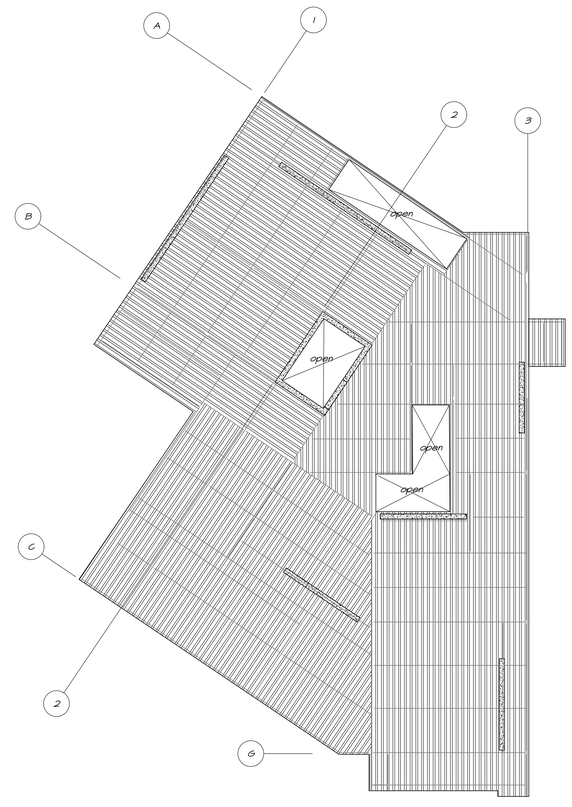

Diaphragm Reinforcing Plan Notes:

1. Parallel bars may be spaced up to 6" apart.
2. All bars shall be ¾" clear of the top of concrete.
3. Bars parallel to the metal deck flutes may be placed below the wwf reinforcing and down in the flute but must be chaired up ¾" clear of the bottom of the deck flute.
4. Bars shall be lap spliced w/ Class B splice where splices are necessary.

Second Floor Diaphragm Reinforcing Plan

1 S2.2A 1/8"=1'-0"

North

Second Floor Metal Deck Orientation Plan

2 S2.2A 1/8"=1'-0"

North

PBK

ARCHITECT PBK Architects, Inc.
PBK.com

SAN LUIS OBISPO
1327 Archer Street, Suite 110
San Luis Obispo, CA 93401
805-529-3076

CONSULTANT

MLA
STRUCTURAL ENGINEERS INC

1132 Suncast Lane, Suite 6
El Dorado Hills, CA 95762
phone: (916) 941-2425
fax: (916) 941-2429

FIRE STATION #44
COASTSIDE FIRE PROTECTION DISTRICT

501 STETSON STREET
MOSS BEACH, CA 94038
PLANNING SUBMITTAL

BID SET

KEY PLAN

PLAN NORTH TRUE NORTH

STAMP

REGISTERED PROFESSIONAL ENGINEER
JOHN M. MANDSAGER
No.3824
Exp.09/30/26
STRUCTURAL
STATE OF CALIFORNIA

CLIENT
COASTSIDE FIRE PROTECTION DISTRICT

PROJECT NUMBER
230137

DATE 12/05/25

DRAWN BY: GSL CHKED BY: JMM

REVISIONS

#	DESCRIPTION	DATE

DIAPHRAGM REINFORCING & METAL DECK PLANS

This document is for plan review only

S2.2A

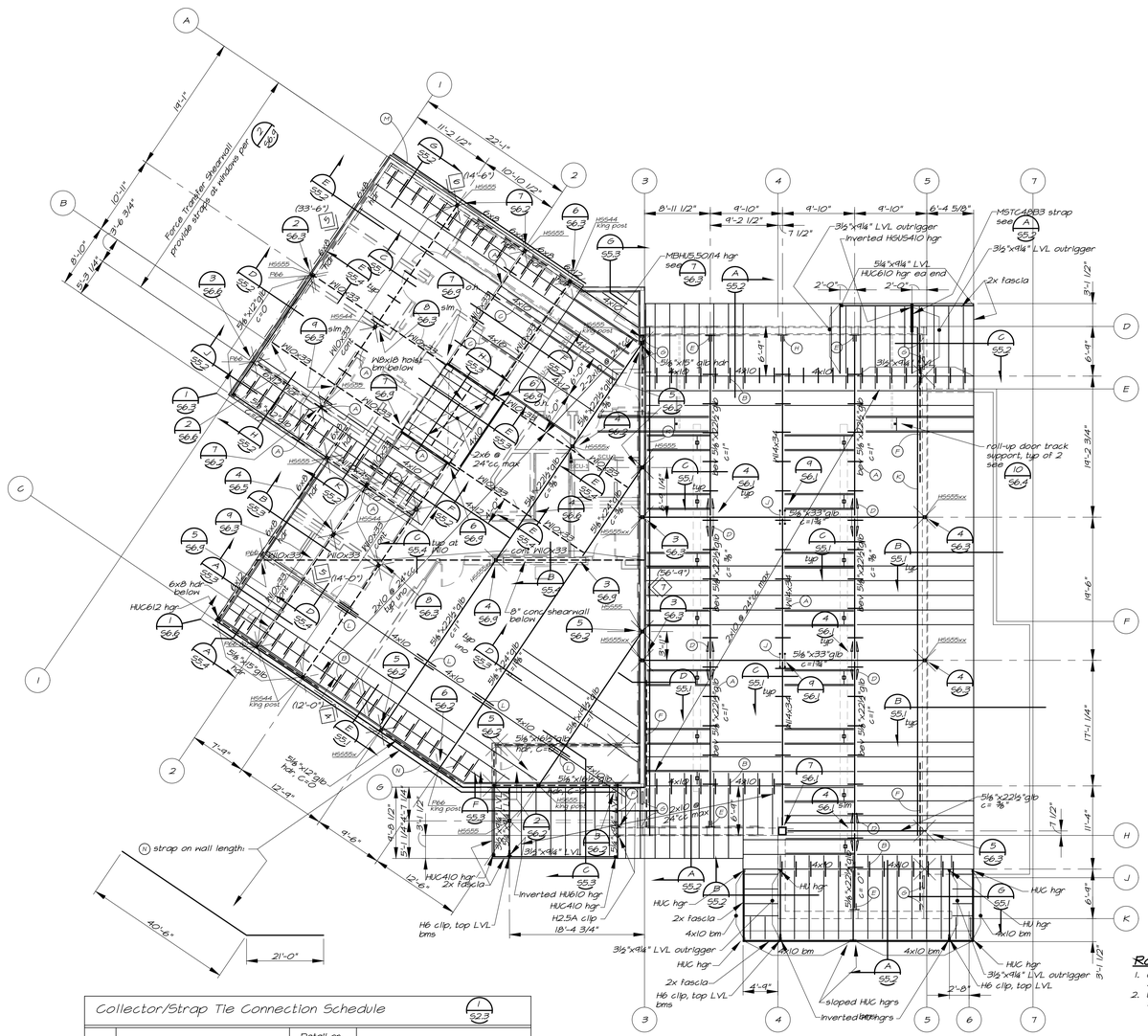

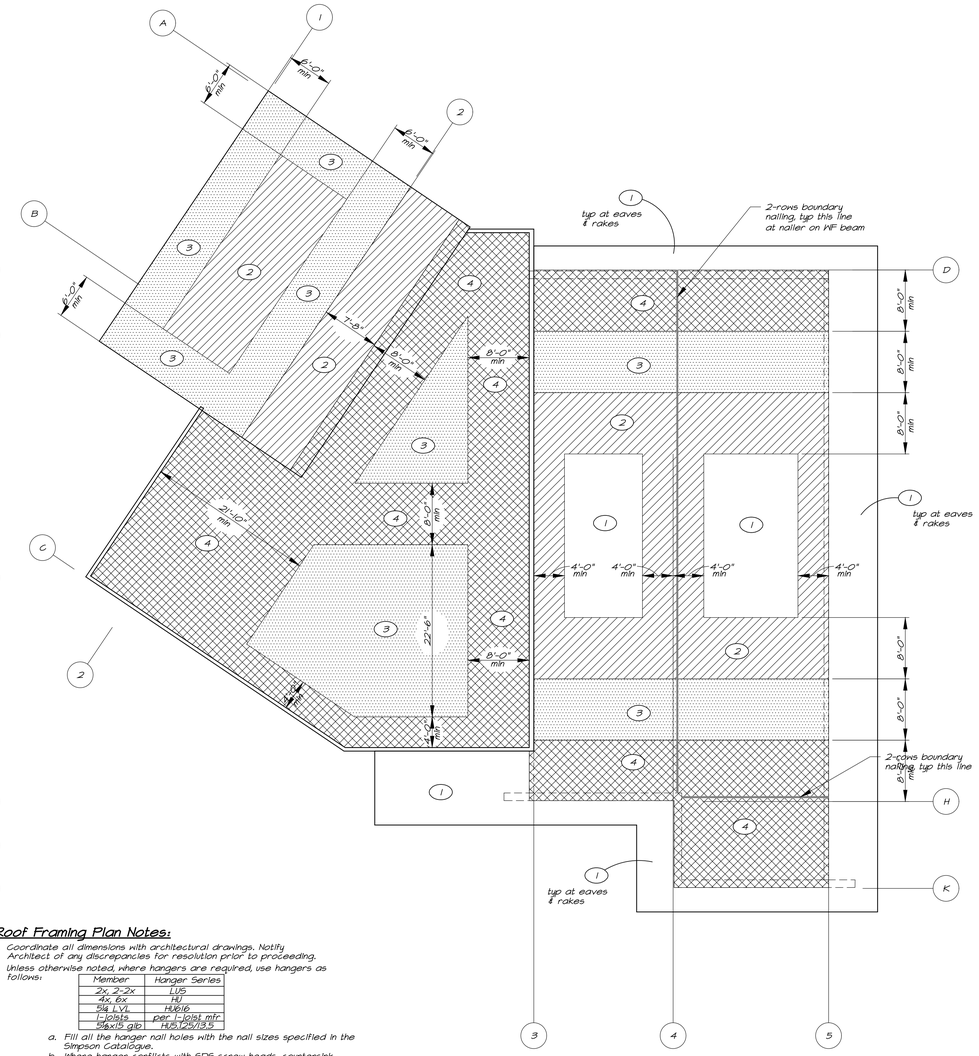

Roof Framing Plan Notes:

1. Coordinate all dimensions with architectural drawings. Notify Architect of any discrepancies for resolution prior to proceeding.
2. Unless otherwise noted, where hangers are required, use hangers as follows:

Member	Hanger Series
2x, 2-2x	LUS
4x, 6x	HU
5¼ LVL	HU616
I-joists	per I-joist mfr.
6x/5 glb	HU5.25/13.5

   a. Fill all the hanger nail holes with the nail sizes specified in the Simpson Catalogue.
   b. Where hanger conflicts with SDS screw heads, countersink screw heads ¼".
3. See sheets S1.1 thru S1.5 for typical notes and details. These notes & details apply to all construction unless noted or detailed otherwise.
4. Posts and columns:
   A) Indicates wood posts typical uno. See plan for sizes.
   Indicates wood King posts between upper and lower framing. See plan for sizes.
   B) Unless noted otherwise, support all 4x beams on 4x6 posts and all 6x and 5⅛"x beams on 6x6 posts
   C) Wood Post & Steel Column Schedule:

Mark	Post Size
P226	2-2x6
P228	2-2x8
P46	4x6
P66	6x6

Mark	Column Size
HS544	HSS4x4x¼"
HS665	HSS5x5x¼"
HS555x	HSS5x5x5/16"
HS555xx	HSS5x5x⅜"

   D) Posts shall be of lumber grades as specified on sheet S1.1 unless noted otherwise on the plans or in the schedule above.
5. Typical roof sheathing shall be 19/32" APA-rated Structural I sheathing (span rating=32/16). Stagger panels typical as shown. Provide plyclips at midspan of all unsupported edges. Nail sheathing and provide blocking at the edges of panels as specified in the Diaphragm Nailing Schedule, (3/S2.3)
6. For post and beam connections in walls see (5/S1.3), otherwise provide all posts with PC/EPC post caps.
7. Unless otherwise designated as shearwalls, all exterior wood walls shall be sheathed with (5/32" CDX sheathing nailed with 10d @ 6"cc at edges and 10d @ 12" cc at field, typical. For shearwalls at the first floor, see the foundation plan, sheet S2.1; For shearwalls at the second floor, see the Roof Framing Plan on this sheet.
8. (1/(5'-0")) Indicates shearwall type and minimum shearwall length at second floor shearwalls, see shearwall schedule (1/S2.1)
9. All interior non-bearing partition walls are to be built full-height to the bottom of the structure and connected per details (10/S1.3) & (4/S1.2)
10. Indicates HSS5x5x⅜" duct supports with 2-2x10 rafters each side. The duct manufacturer shall review and approve the locations and number of the supports and revise as necessary. For connection, see (9/S6.4)

Roof Framing Plan

1/8"=1'-0"

North

Collector/Strap Tie Connection Schedule (1/S2.3)

MK	Connection	Detail or Section	Notes
(A)	MSTA24 strap w/ (18)-10d nails @ 4'-0" cc max., typ this line	See sections	Typical continuity tie strap to be provided across glulam beams at the Apparatus Bay, nailed to rafters.
(B)	MSTA24 strap w/ (18)-10d nails @ 2'-0" cc max., typ this line	(A/S5.2)	
(C)	4x6 diagonal brace strut at 4x rafters	(F/S5.2)	
(D)	double holdown continuity ties	(4/S6.1)	
(E)	wall tie anchorage	(5/S6.1)	
(F)	On wall, (2)-CMSTI4 straps x 20'-0" w/ (2) rows 10d nails @ 1⅞" cc typ at each strap to blkg in wall	(6/S6.1)	
(G)	holdown wall tie anchor, connected to blkg in all	(6/S6.1)	Condition is typical at Grid Line 5 and similar at Grid Line 3.
(H)	wall tie anchorage	(1/S6.2)	
(J)	double threaded rod continuity ties	(4/S6.1)	
(K)	On roof, CMSTI2 strap, continuous across entire building (grids D to H) w/ (2) rows 10d nails @ 1⅞" cc typ at each strap to blkg	See sections	Splice straps per (12/S1.3)
(L)	(2) - CMSTI4 straps x 6'-0" (one ea side of 4x10) each w/ (2) - rows 10d nails @ 1⅞" cc, typ.		stagger strap locations on each side of the 4x10
(M)	(2)-CMSTI4 straps x 32'-0" length	(6/S6.3)	Provide 6x8 blkg in wall at strap, typ.
(N)	On wall, CMSTI4 strap (see plan for length) w/ (2) rows 10d nails @ 1⅞" cc typ to blkg in wall	(E/S5.1)	Provide 6x8 blkg in wall at strap, typ. Splice strap per (12/S1.3)

⚠ Mechanical Unit Schedule (3/S2.3)

MK	Max. Weight	Details		Notes
HRU-1, HRU-2	800 lbs.	(2/M5.2)	(13/S1.4)	
SCU-1, SCU-2	200 lbs.	(11/M5.1)	(13/S1.4)	

NOTES:
1. Coordinate all unit types, sizes, weights, and locations with mechanical drawings.

Diaphragm Nailing Schedule (2/S2.3)

MK	Material	edge nailing	boundary nailing	blocking required at unsupported edges
1	19/32" Struct I	10d @ 6"cc	N/A	not req'd
2	19/32" Struct I	10d @ 6"cc	N/A	2x min.
3	19/32" Struct I	10d @ 6"cc	10d @ 4"cc	2x min.
4	19/32" Struct I	10d @ 4"cc	10d @ 2½"cc	2x min.

NOTES:
1. Sheathing to be staggered as shown on the plan
2. Field nailing to be 10d @ 12"cc typical.
3. Boundary nailing to occur at all ledgers, plates and blkg at walls and at all other locations shown on the key plans and sections.
4. 10d nails shall have a minimum shank diameter of 0.148" and shall have a minimum penetration into framing members of 1⅝".
5. Provide 2x blocking at unsupported panel edges as noted as noted in the schedule. Blocking to be nailed to framing members w/ 3-16d TN each end, typ.

Roof Diaphragm Keyplan (2/S2.3)

1/8"=1'-0"

North

PBK

ARCHITECT PBK Architects, Inc.
PBK.com
SAN LUIS OBISPO
1327 Archer Street, Suite 110
San Luis Obispo, CA 93401
805-529-3076

CONSULTANT
MLA STRUCTURAL ENGINEERS INC
1132 Suncast Lane, Suite 6
El Dorado Hills, CA 95762
phone: (916) 941-2425
fax: (916) 941-2429

FIRE STATION #44
COASTSIDE FIRE PROTECTION DISTRICT

501 STETSON STREET
MOSS BEACH, CA 94038
PLANNING SUBMITTAL

BID SET

KEY PLAN

PLAN NORTH / TRUE NORTH

STAMP
REGISTERED PROFESSIONAL ENGINEER
JOHN M MANDSAGER
No.3824
Exp.09/30/26
STRUCTURAL
STATE OF CALIFORNIA

CLIENT
COASTSIDE FIRE PROTECTION DISTRICT
PROJECT NUMBER
230137

DATE 12/05/25
DRAWN BY: GSL CHKED BY: JMM

REVISIONS

#	DESCRIPTION	DATE

ROOF FRAMING PLAN

This document is for plan review only

S2.3

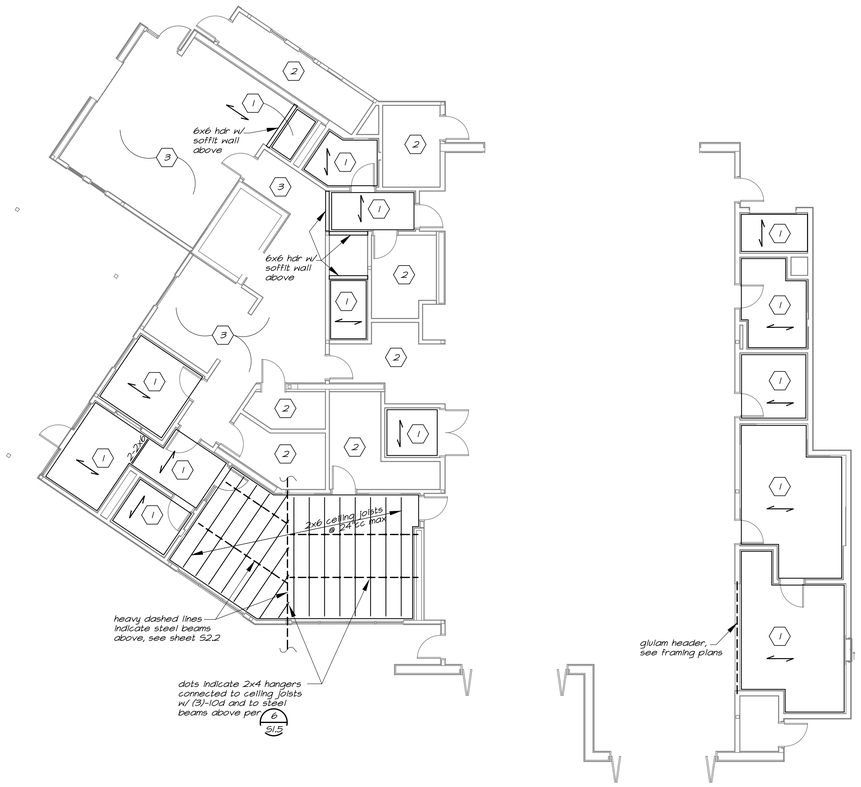

First Floor Ceiling Framing Plan

1/S2.4 1/8"=1'-0"

North

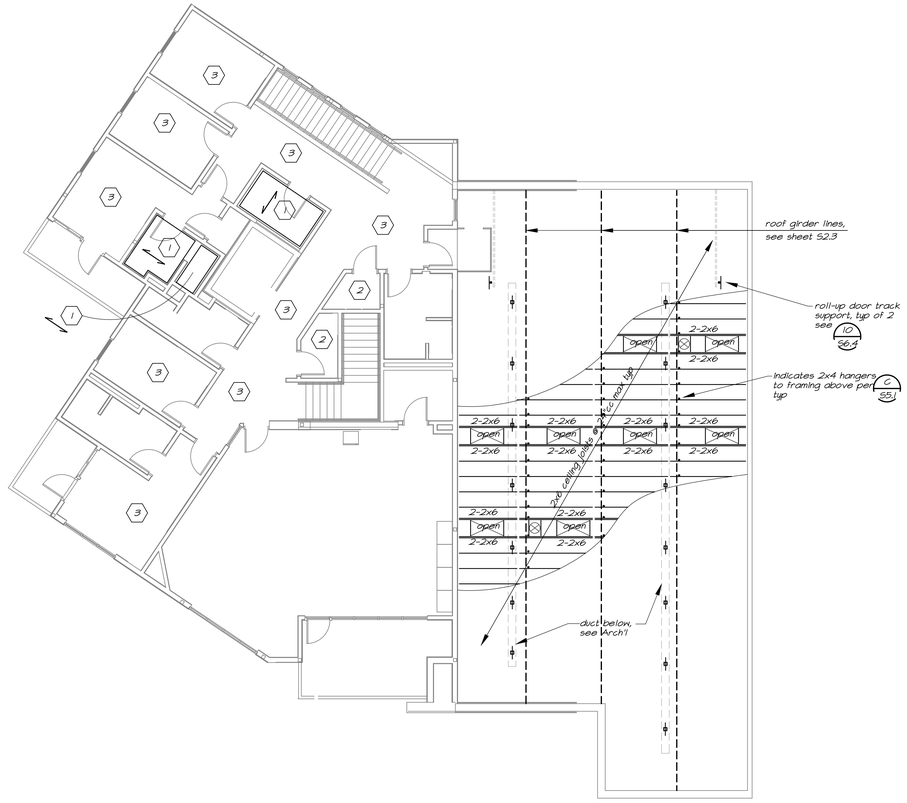

Second Floor & Apparatus Bay Ceiling Framing Plan

2/S2.4 1/8"=1'-0"

North

Ceiling Framing Plan Notes:

1. Coordinate all ceiling dimensions, locations and elevations with architectural drawings. Notify Architect of any discrepancies for resolution prior to proceeding.
2. Coordinate all ceiling mounted equipment and ceiling openings with architectural, mechanical, electrical, and all other trades. Notify the Architect of any conflicts for resolution prior to proceeding.
3. All non-structural items shown including penetrations should be viewed as schematic in nature. All such items shall be as specified elsewhere in the drawings and specifications as is required by notes 1 & 2 above.
4. See sheet S1.1 thru S1.5 for typical notes and details. These notes and details apply to all construction unless noted or detailed otherwise.
5. ⟷ indicates direction of ceiling joist framing (span direction) typ.
6. Use LUS-series hangers typ uno. Use LUS-2 hangers at dbl joists typ.
7. ↑ indicates HSS5x5x3/8" duct supports with 2-2x10 rafters each side. The duct manufacturer shall review and approve the locations and number of the supports and revise as necessary. For connection, see 9/S6.4

Mark	Keynote
1	ceiling joists, framed per 9/S1.4
2	open to framing above
3	suspended T-bar ceiling system, coord w/ Arch'l
4	
5	

PBK

ARCHITECT PBK Architects, Inc.
PBK.com
SAN LUIS OBISPO
1327 Archer Street, Suite 110
San Luis Obispo, CA 93401
805-529-3076

CONSULTANT
MLA STRUCTURAL ENGINEERS INC
1132 Suncast Lane, Suite 6
El Dorado Hills, CA 95762
phone: (916) 941-2425
fax: (916) 941-2429

FIRE STATION #44
COASTSIDE FIRE PROTECTION DISTRICT

501 STETSON STREET
MOSS BEACH, CA 94038
PLANNING SUBMITTAL

BID SET

KEY PLAN

PLAN NORTH TRUE NORTH

STAMP
REGISTERED PROFESSIONAL ENGINEER
JOHN M. MANDSAGER
No.3824
Exp.09/30/26
STRUCTURAL
STATE OF CALIFORNIA

CLIENT
COASTSIDE FIRE PROTECTION DISTRICT
PROJECT NUMBER
230137
DATE 12/05/25
DRAWN BY: GSL CHKED BY: JMM

REVISIONS

#	DESCRIPTION	DATE

CEILING FRAMING PLANS

This document is for plan review only

S2.4

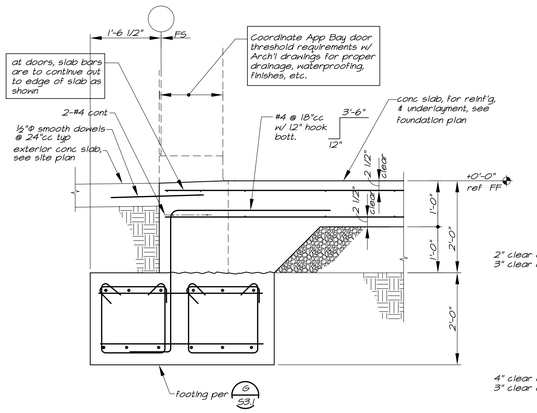

Section F 53.1 ¾"=1'-0"

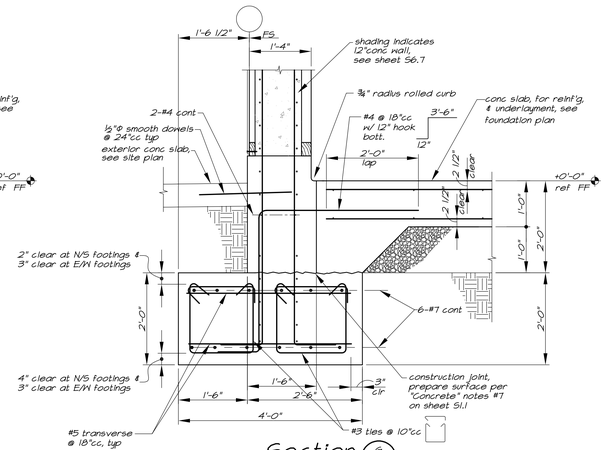

Section G 53.1 ¾"=1'-0"

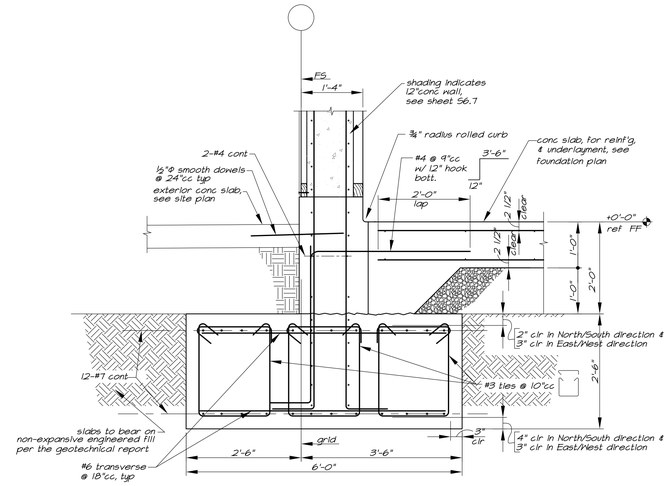

Section H 53.1 ¾"=1'-0"

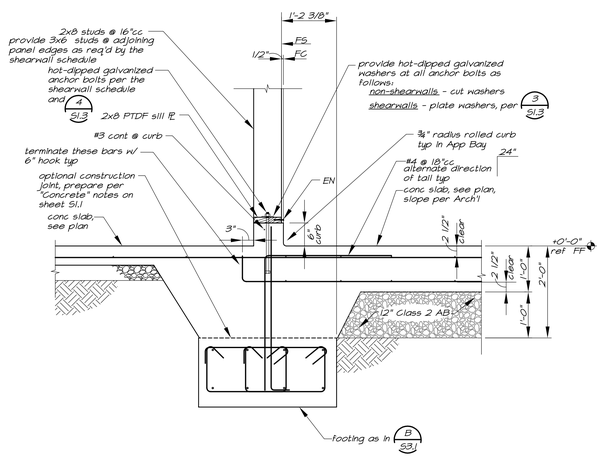

Section C 53.1 ¾"=1'-0"

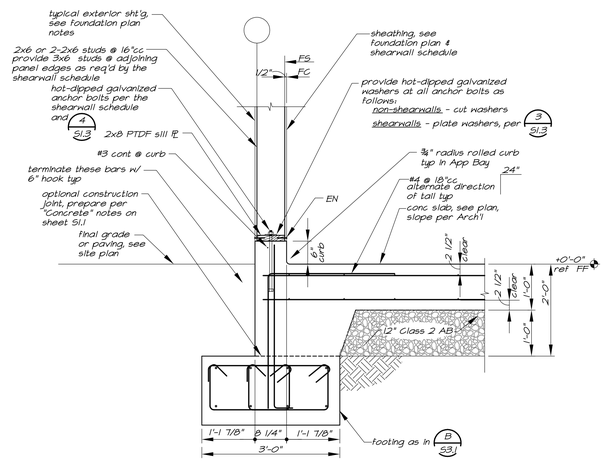

Section D 53.1 ¾"=1'-0"

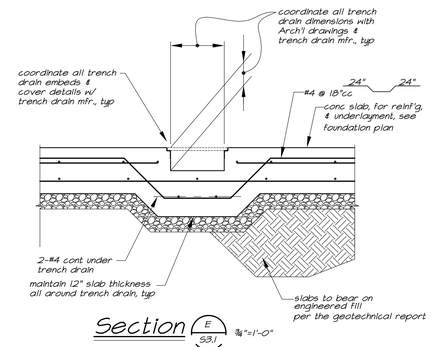

Section E 53.1 ¾"=1'-0"

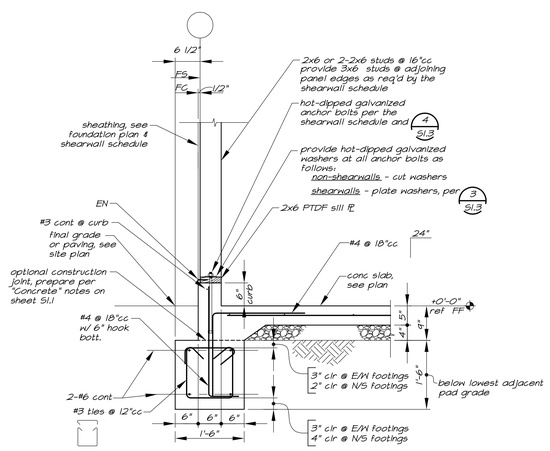

Section A 53.1 ¾"=1'-0"

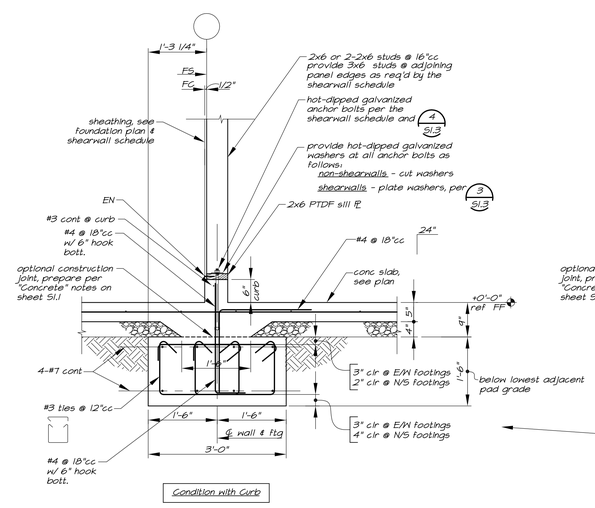

Condition with Curb

Condition without Curb

Section B 53.1 ¾"=1'-0"

ARCHITECT PBK Architects, Inc.
PBK.com
SAN LUIS OBISPO
1327 Archer Street, Suite 110
San Luis Obispo, CA 93401
805-528-3076

CONSULTANT
MLA STRUCTURAL ENGINEERS INC
1132 Suncast Lane, Suite 6
El Dorado Hills, CA 95762
phone: (916) 941-2425
fax: (916) 941-2429

FIRE STATION #44
COASTSIDE FIRE PROTECTION DISTRICT

501 STETSON STREET
MOSS BEACH, CA 94038

PLANNING SUBMITTAL

BID SET

KEY PLAN

PLAN NORTH TRUE NORTH

STAMP
REGISTERED PROFESSIONAL ENGINEER
JOHN M. MANDSAGER
No.3824
Exp.09/30/26
STRUCTURAL
STATE OF CALIFORNIA

CLIENT
COASTSIDE FIRE PROTECTION DISTRICT

PROJECT NUMBER 230137

DATE 12/05/25

DRAWN BY: GSL CHKED BY: JMM

REVISIONS

#	DESCRIPTION	DATE

SECTIONS

This document is for plan review only

S3.1

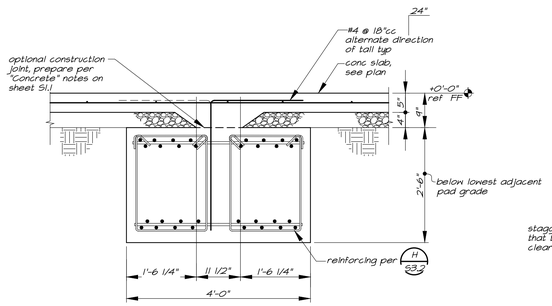

Section G S3.2 ¾"=1'-0"

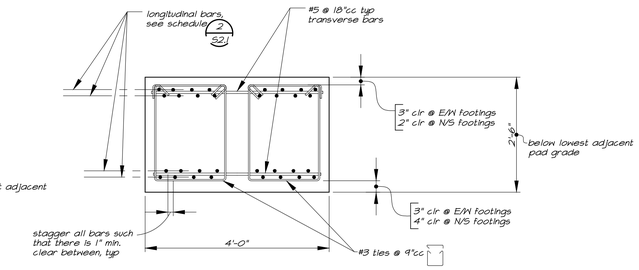

Section H S3.2 ¾"=1'-0"

Typical 4'-0" Footing Reinforcing

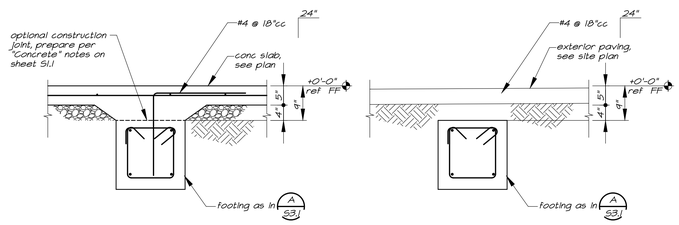

Condition at Interior of Building

Condition at Exterior of Building

Section D S3.2 ¾"=1'-0"

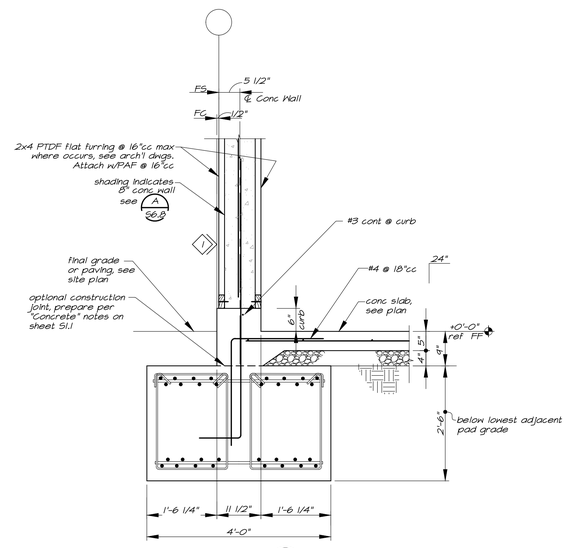

Section E S3.2 ¾"=1'-0"

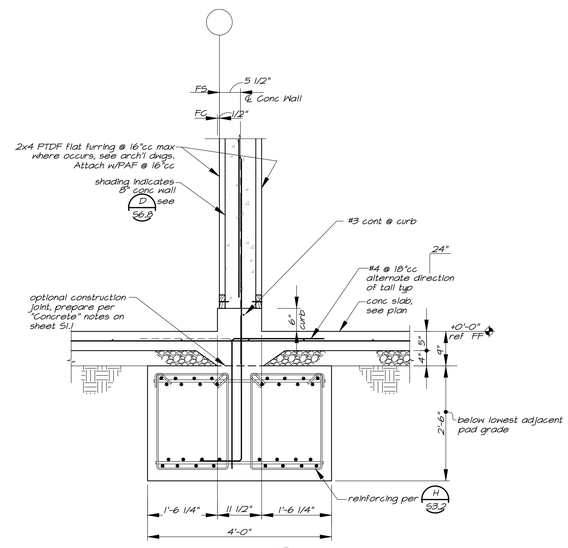

Section F S3.2 ¾"=1'-0"

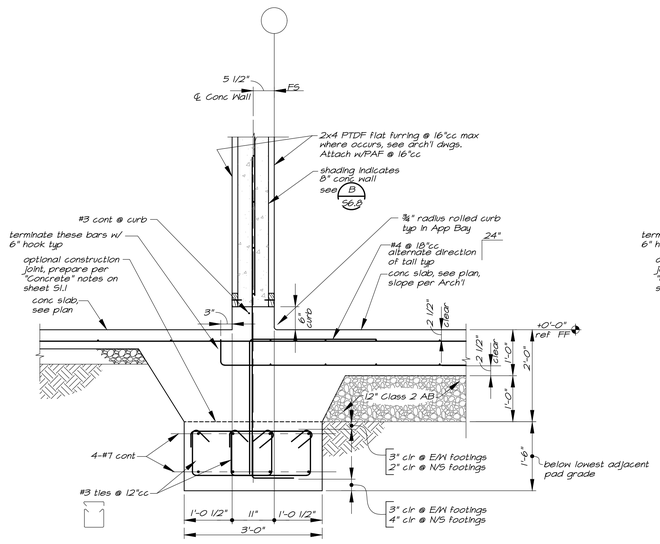

Section A S3.2 ¾"=1'-0"

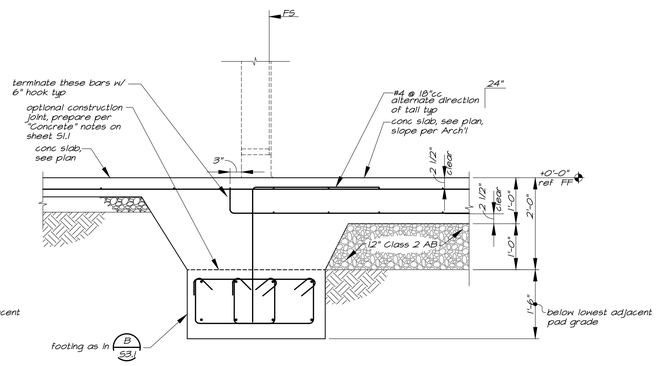

Section B S3.2 ¾"=1'-0"

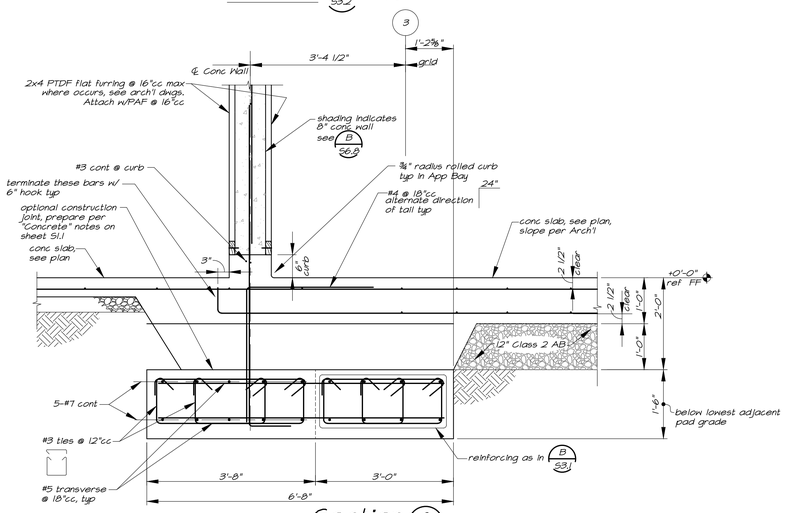

Section C S3.2 ¾"=1'-0"

PBK

ARCHITECT PBK Architects, Inc.
PBK.com
SAN LUIS OBISPO
1327 Archer Street, Suite 110
San Luis Obispo, CA 93401
805-529-3076

CONSULTANT
MLA
STRUCTURAL ENGINEERS INC
1132 Suncast Lane, Suite 6
El Dorado Hills, CA 95762
phone: (916) 941-2425
fax: (916) 941-2429

FIRE STATION #44
COASTSIDE FIRE PROTECTION DISTRICT

501 STETSON STREET
MOSS BEACH, CA 94038
PLANNING SUBMITTAL

COASTSIDE FIRE PROTECTION DISTRICT EST 2007

BID SET

KEY PLAN

PLAN NORTH TRUE NORTH

STAMP
REGISTERED PROFESSIONAL ENGINEER
JOHN M. MANDSAGER
No.3824
Exp.09/30/26
STRUCTURAL
STATE OF CALIFORNIA

CLIENT
COASTSIDE FIRE
PROTECTION DISTRICT
PROJECT NUMBER
230137
DATE 12/05/25
DRAWN BY: GSL CHKED BY: JMM

REVISIONS

#	DESCRIPTION	DATE

SECTIONS

This document is for plan review only

S3.2

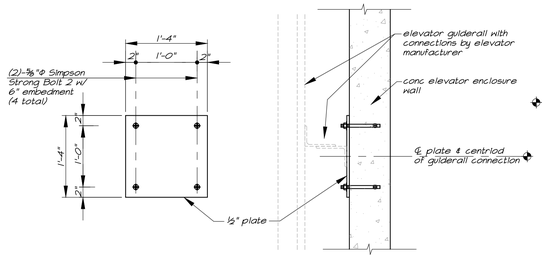

Detail 1/S3.3 1"=1'-0"

Typical Guiderail Connection to Concrete Walls

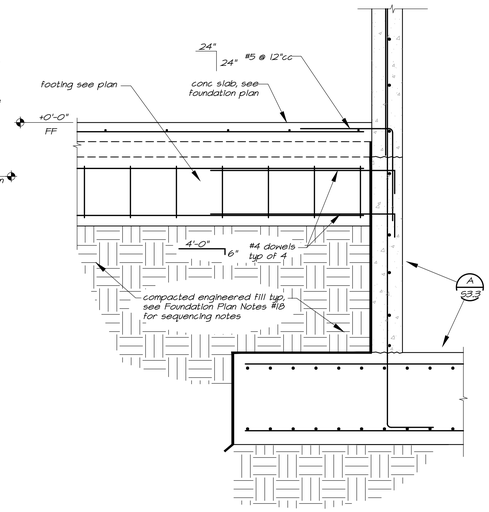

Detail 2/S3.3 ¾"=1'-0"

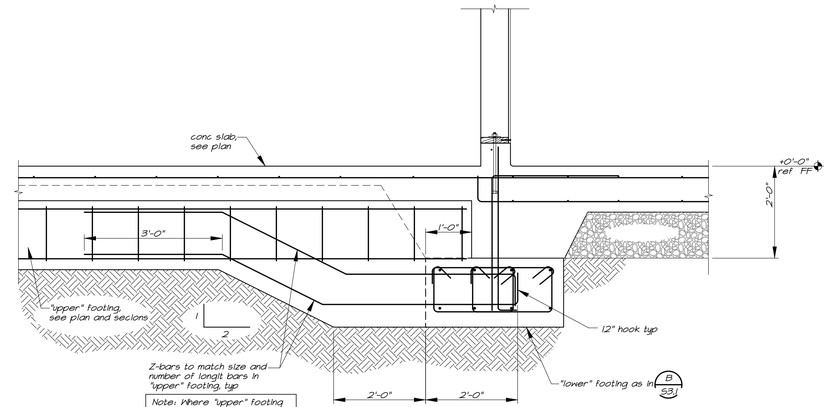

Detail 3/S3.3 ¾"=1'-0"

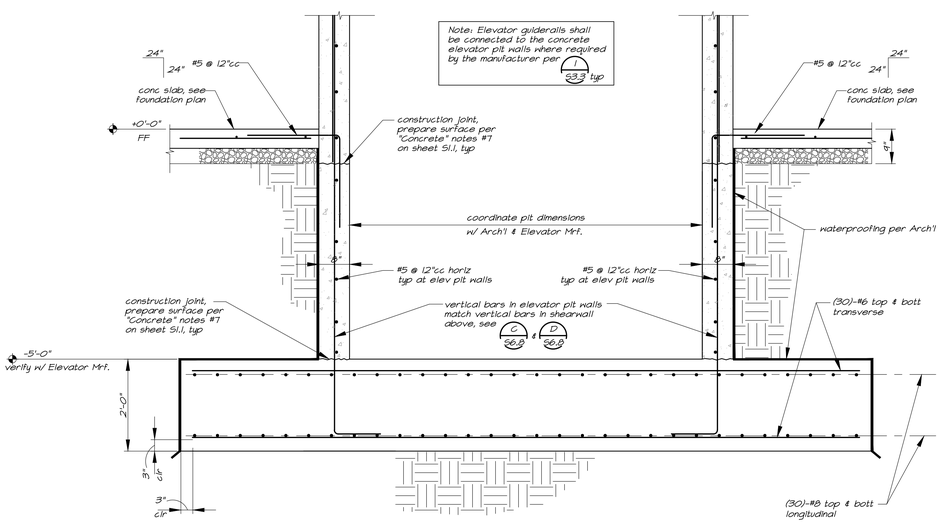

Section A/S3.3 ¾"=1'-0"

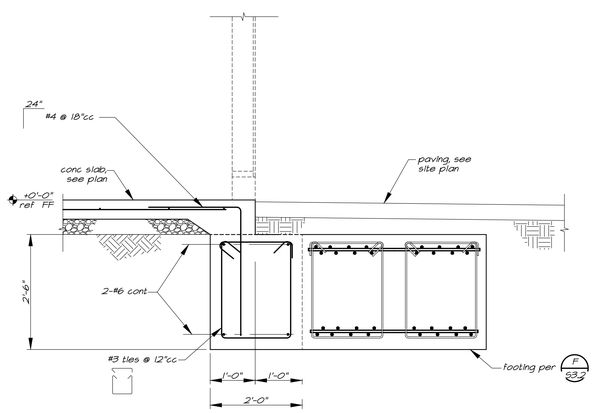

Section B/S3.3 ¾"=1'-0"

PBK

ARCHITECT PBK Architects, Inc.
PBK.com
SAN LUIS OBISPO
1327 Archer Street, Suite 110
San Luis Obispo, CA 93401
805-529-3076

CONSULTANT
MLA
STRUCTURAL ENGINEERS INC
1132 Suncast Lane, Suite 6
El Dorado Hills, CA 95762
phone: (916) 941-2425
fax: (916) 941-2429

FIRE STATION #44
COASTSIDE FIRE PROTECTION DISTRICT

501 STETSON STREET
MOSS BEACH, CA 94038
PLANNING SUBMITTAL

BID SET

KEY PLAN
PLAN NORTH
TRUE NORTH

STAMP
REGISTERED PROFESSIONAL ENGINEER
JOHN M. MANDSAGER
No.3824
Exp.09/30/26
STRUCTURAL
STATE OF CALIFORNIA

CLIENT
COASTSIDE FIRE PROTECTION DISTRICT
PROJECT NUMBER
230137
DATE 12/05/25
DRAWN BY: GSL CHKED BY: JMM

REVISIONS

#	DESCRIPTION	DATE

SECTIONS

This document is for plan review only

S3.3

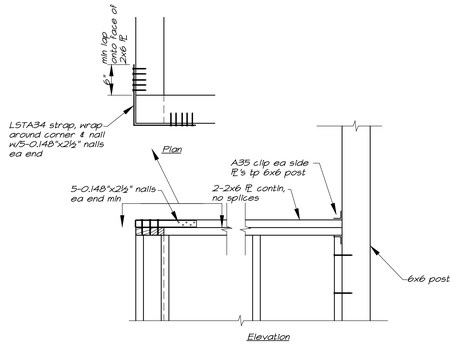

Detail 1/S4.1 1"=1'-0"

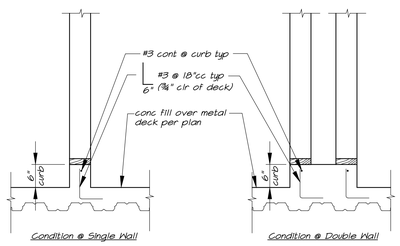

Option A: Monolithic Single Pour Curbs

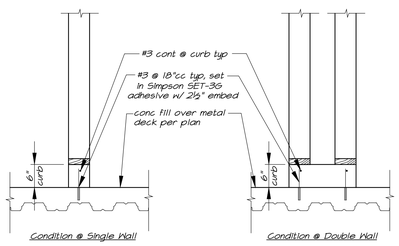

Option B: Curbs Cast In Second Pour

Note: Condition is similar at edge of floors.

1/S4.1 Concrete Curbs @ Concrete Fill over Metal Deck ¾"=1'-0"

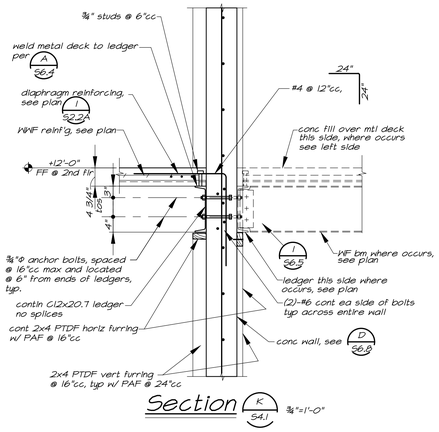

Section K/S4.1 ¾"=1'-0"

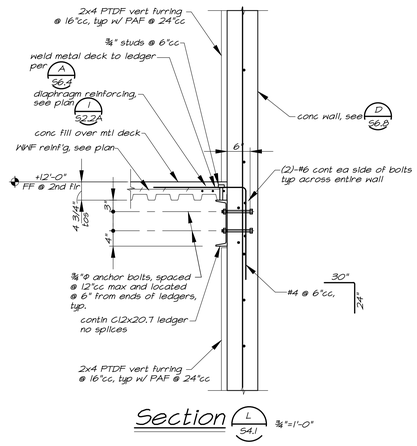

Section L/S4.1 ¾"=1'-0"

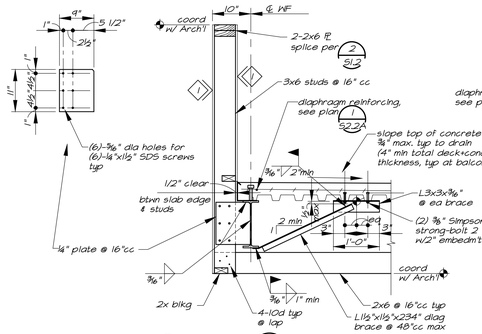

Section F/S4.1 ¾"=1'-0"

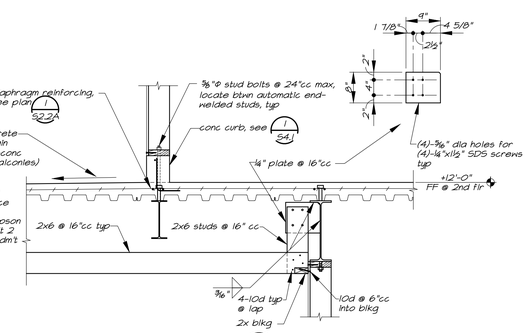

Section G/S4.1 ¾"=1'-0"

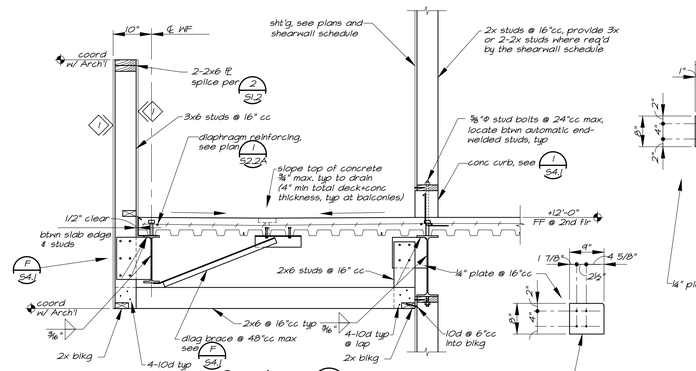

Section H/S4.1 ¾"=1'-0"

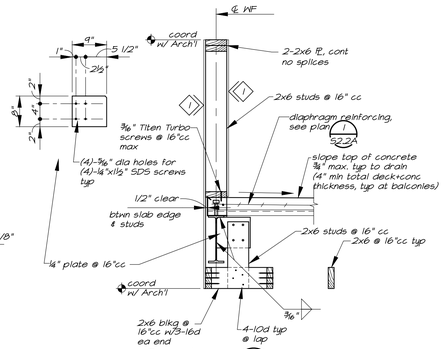

Section J/S4.1 ¾"=1'-0"

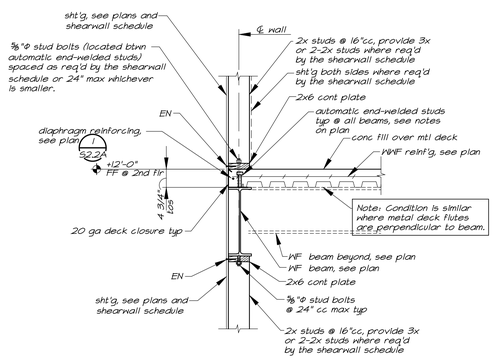

Section A/S4.1 ¾"=1'-0"

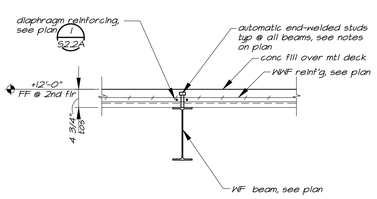

Section B/S4.1 ¾"=1'-0"
Typical Section at Beams

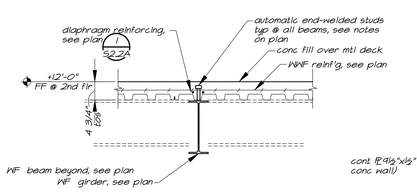

Section C/S4.1 ¾"=1'-0"
Typical Section at Girder

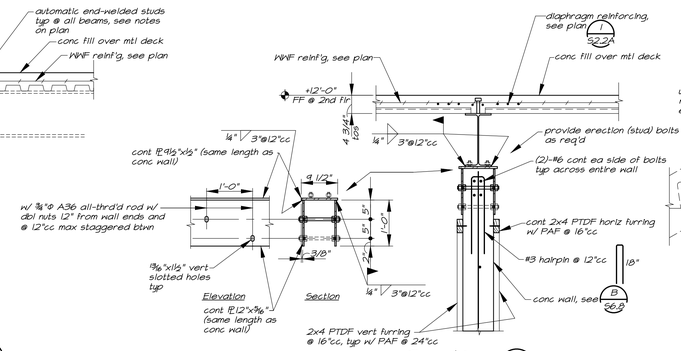

Section D/S4.1 ¾"=1'-0"

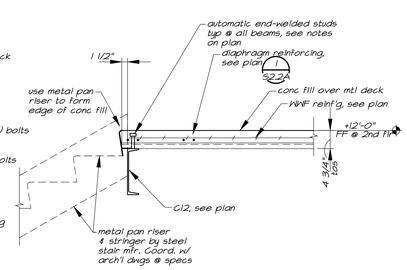

Section E/S4.1 ¾"=1'-0"

This document is for plan review only

PBK

ARCHITECT PBK Architects, Inc.
PBK.com
SAN LUIS OBISPO
1327 Archer Street, Suite 110
San Luis Obispo, CA 93401
805-529-3076

CONSULTANT
MLA STRUCTURAL ENGINEERS INC
1132 Suncast Lane, Suite 6
El Dorado Hills, CA 95762
phone: (916) 941-2425
fax: (916) 941-2429

FIRE STATION #44
COASTSIDE FIRE PROTECTION DISTRICT

501 STETSON STREET
MOSS BEACH, CA 94038
PLANNING SUBMITTAL

COASTSIDE FIRE PROTECTION DISTRICT EST. 1961

BID SET

KEY PLAN
PLAN NORTH
TRUE NORTH

STAMP
REGISTERED PROFESSIONAL ENGINEER
JOHN M. MANDSAGER
No.3824
Exp.09/30/26
STRUCTURAL
STATE OF CALIFORNIA

CLIENT
COASTSIDE FIRE PROTECTION DISTRICT
PROJECT NUMBER
230137

DATE	12/05/25
DRAWN BY: GSL	CHKED BY: JMM

REVISIONS

#	DESCRIPTION	DATE

DETAILS

S4.1

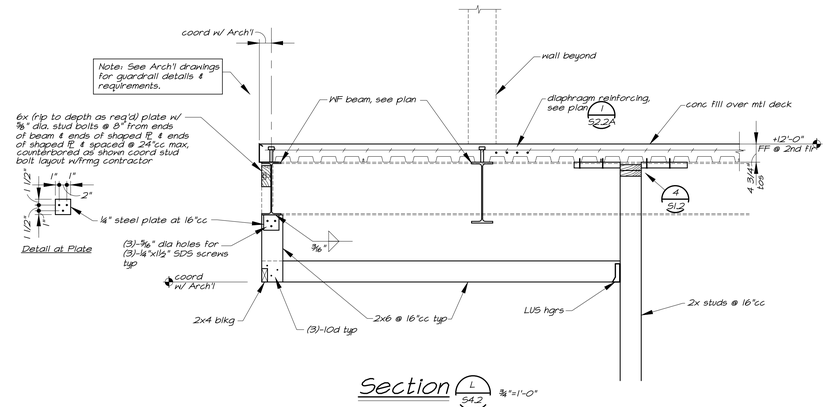

Section L 54.2 ¾"=1'-0"

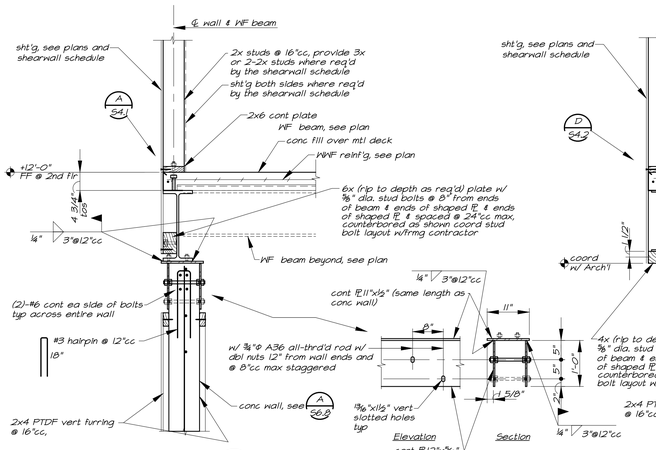

Section G 54.2 ¾"=1'-0"

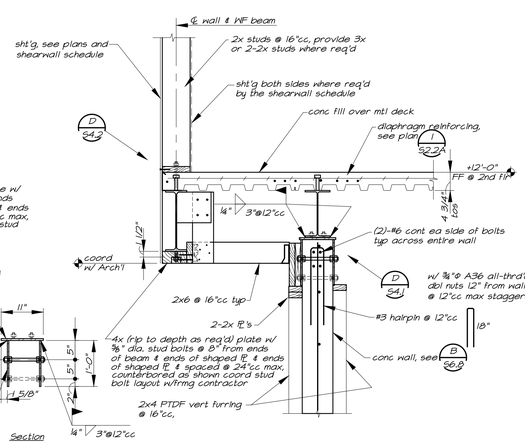

Section H 54.2 ¾"=1'-0"

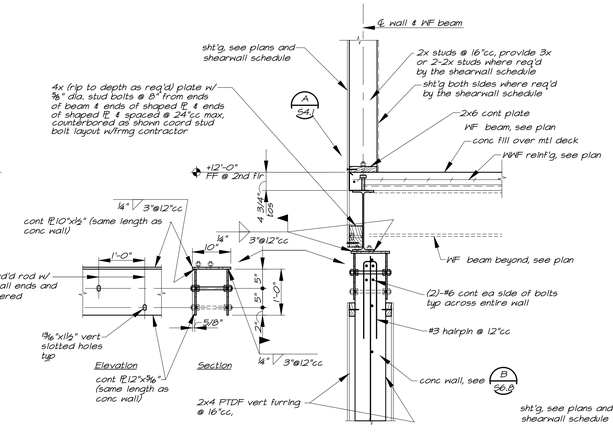

Section J 54.2 ¾"=1'-0"

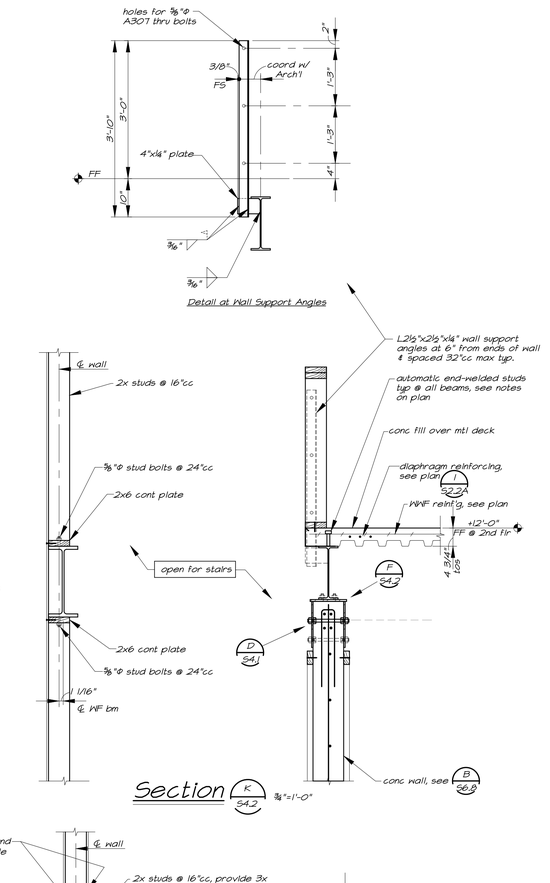

Section K 54.2 ¾"=1'-0"

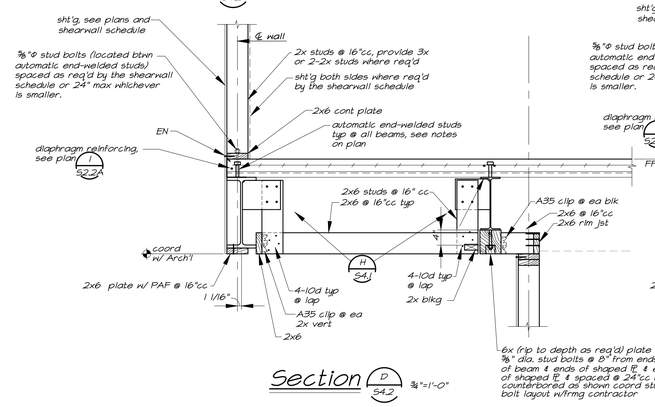

Section D 54.2 ¾"=1'-0"

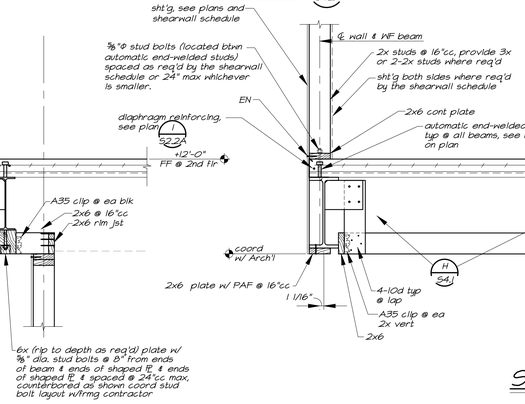

Section E 54.2 ¾"=1'-0"

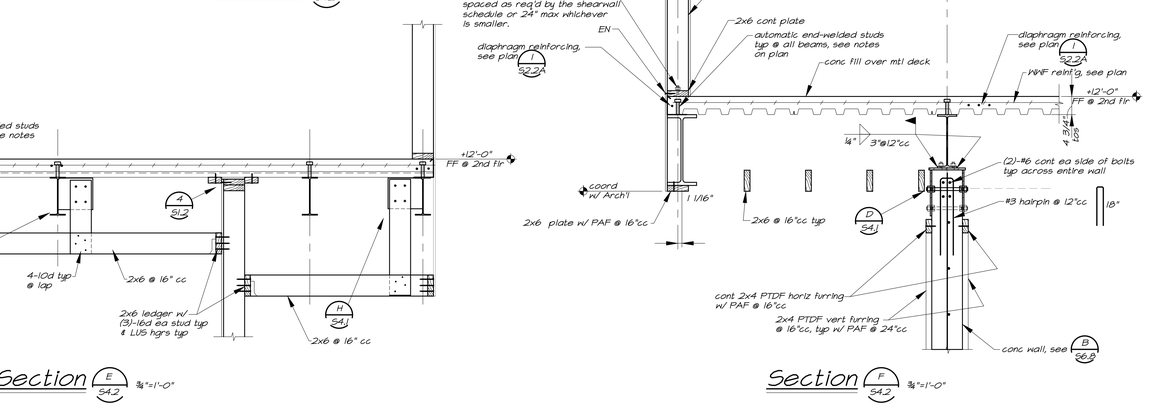

Section F 54.2 ¾"=1'-0"

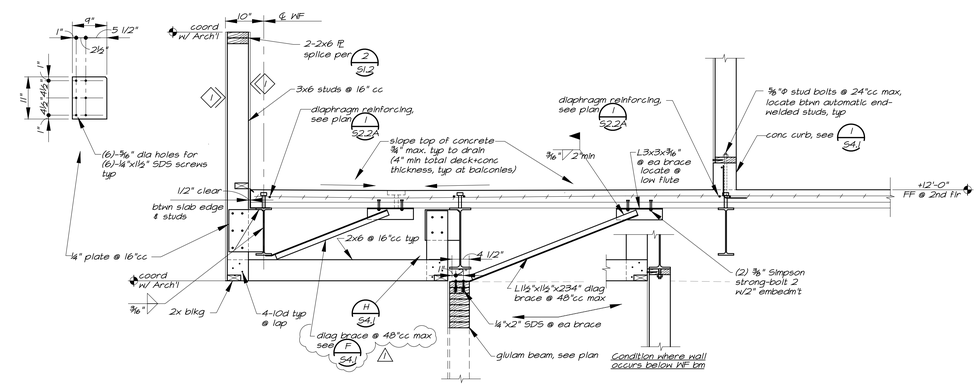

Section A 54.2 ¾"=1'-0"

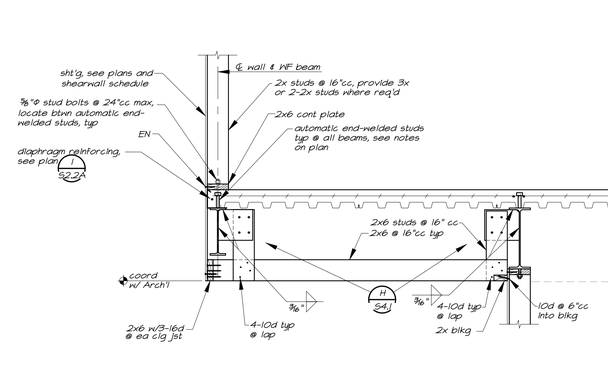

Section B 54.2 ¾"=1'-0"

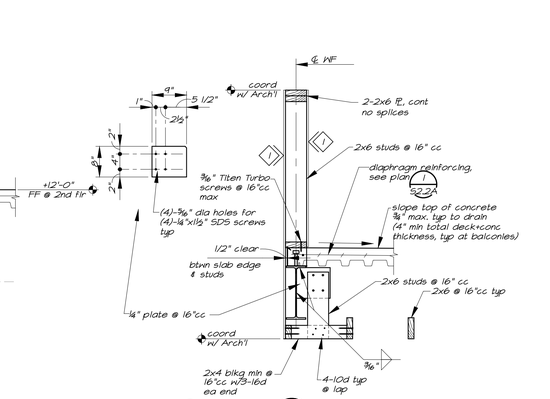

Section C 54.2 ¾"=1'-0"

PBK

ARCHITECT
PBK Architects, Inc.
PBK.com
SAN LUIS OBISPO
1327 Archer Street, Suite 110
San Luis Obispo, CA 93401
805-529-3076

CONSULTANT
MLA
STRUCTURAL ENGINEERS INC
1132 Suncast Lane, Suite 6
El Dorado Hills, CA 95762
phone: (916) 941-2425
fax: (916) 941-2429

FIRE STATION #44
COASTSIDE FIRE PROTECTION DISTRICT

501 STETSON STREET
MOSS BEACH, CA 94038
PLANNING SUBMITTAL

COASTSIDE FIRE PROTECTION DISTRICT ESTD 1937

BID SET

KEY PLAN
PLAN NORTH
TRUE NORTH

STAMP
REGISTERED PROFESSIONAL ENGINEER
JOHN N. MANDSAGER
No.3824
Exp.09/30/26
STRUCTURAL
STATE OF CALIFORNIA

CLIENT
COASTSIDE FIRE PROTECTION DISTRICT
PROJECT NUMBER
230137
DATE 12/05/25
DRAWN BY: GSL CHKED BY: JMM
REVISIONS

#	DESCRIPTION	DATE

SECTIONS

This document is for plan review only

S4.2

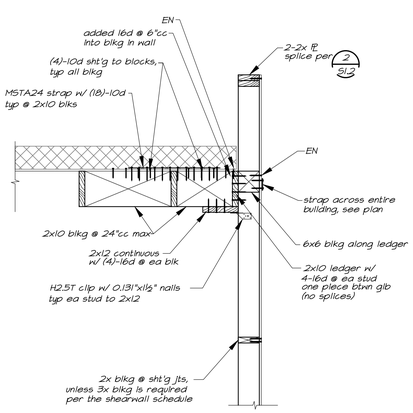

Section E 55.1 ¾"=1'-0"

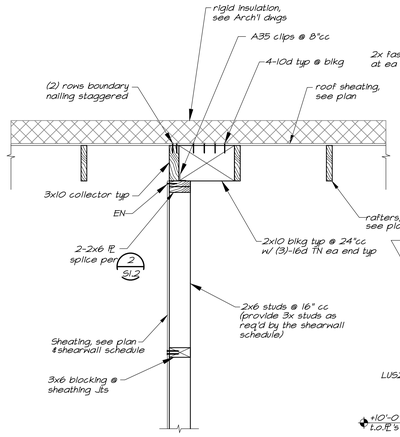

Section F 55.1 ¾"=1'-0"

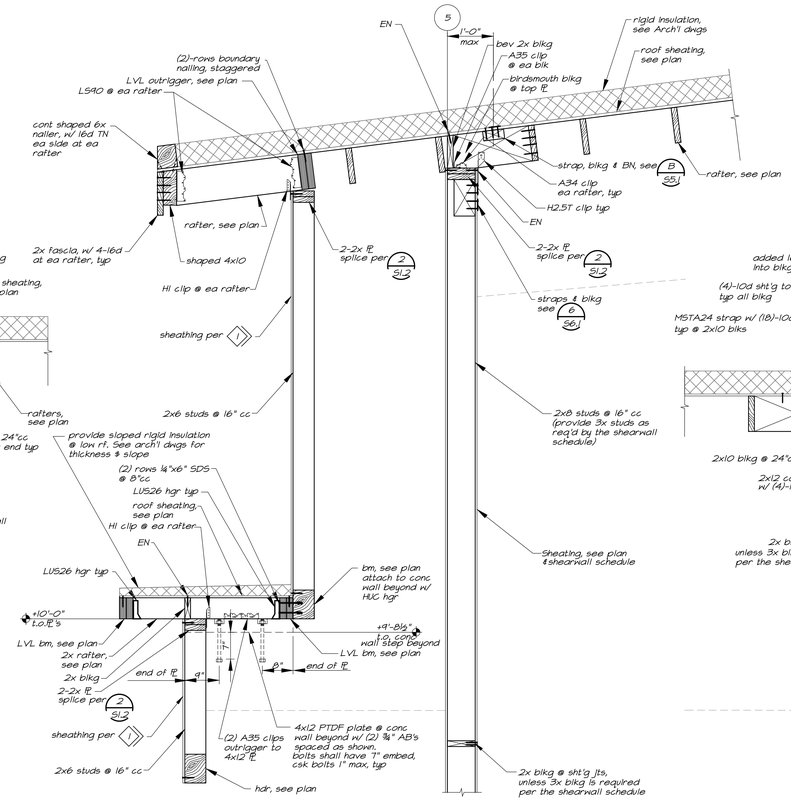

Section G 55.1 ¾"=1'-0"

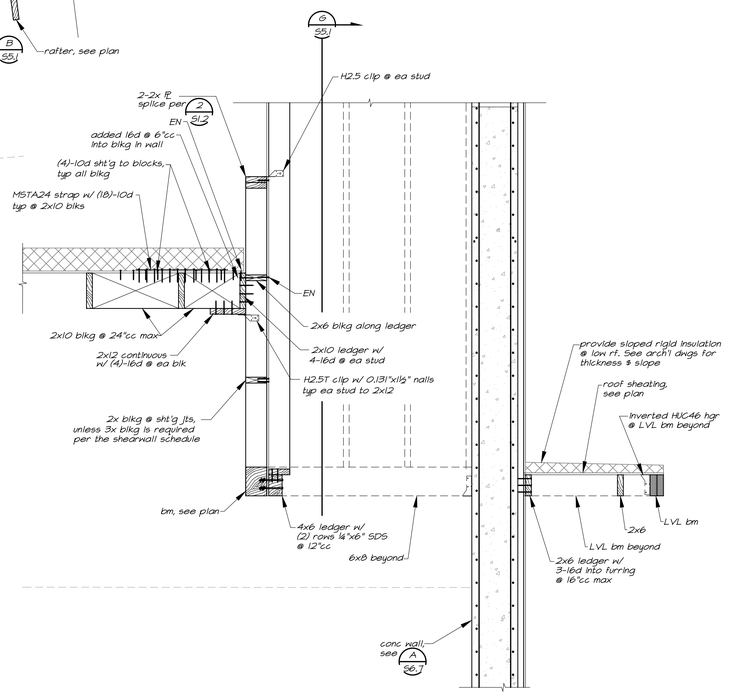

Section H 55.1 ¾"=1'-0"

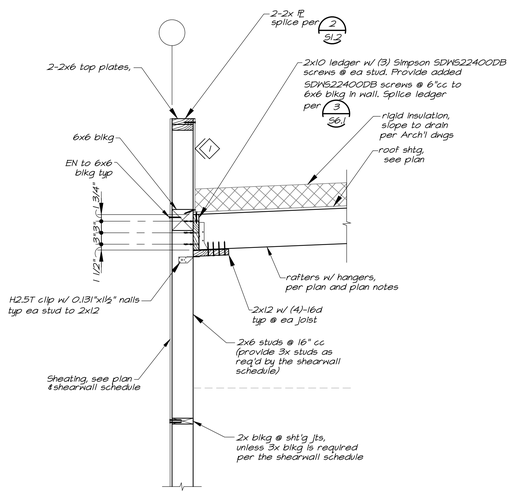

Section A 55.1 ¾"=1'-0"

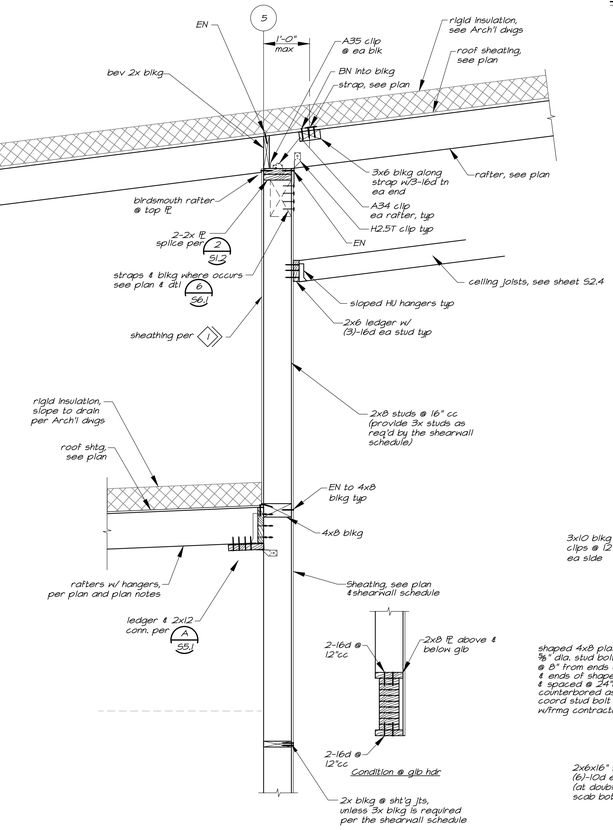

Section B 55.1 ¾"=1'-0"

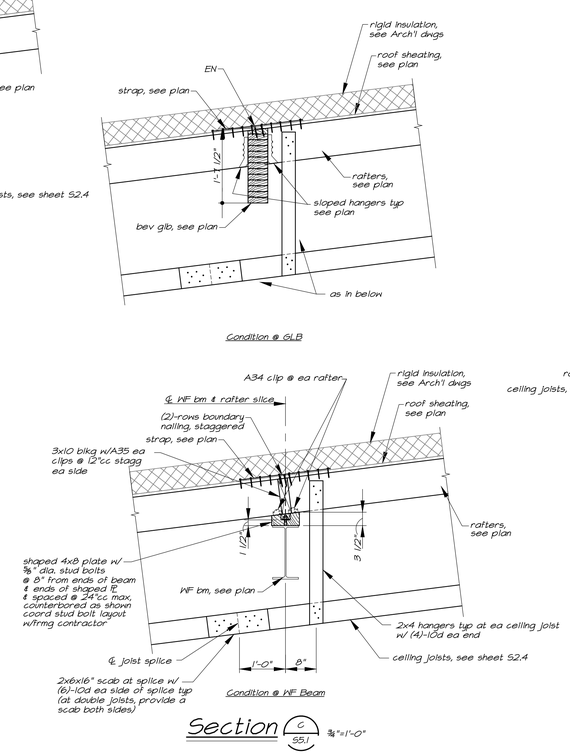

Section C 55.1 ¾"=1'-0"

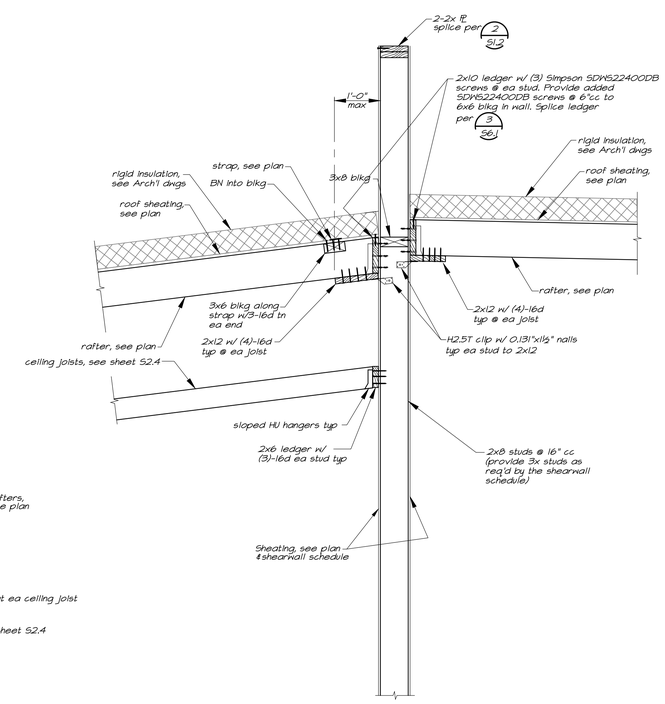

Section D 55.1 ¾"=1'-0"

PBK

ARCHITECT
PBK Architects, Inc.
PBK.com
SAN LUIS OBISPO
1327 Archer Street, Suite 110
San Luis Obispo, CA 93401
805-529-3076

CONSULTANT
MLA
STRUCTURAL ENGINEERS INC
1132 Suncast Lane, Suite 6
El Dorado Hills, CA 95762
phone: (916) 941-2425
fax: (916) 941-2429

FIRE STATION #44
COASTSIDE FIRE PROTECTION DISTRICT

501 STETSON STREET
MOSS BEACH, CA 94038
PLANNING SUBMITTAL

COASTSIDE FIRE PROTECTION DISTRICT EST. 2007

BID SET

KEY PLAN
PLAN NORTH
TRUE NORTH

STAMP
REGISTERED PROFESSIONAL ENGINEER
JOHN M. MANDSAGER
No.3824
Exp.09/30/26
STRUCTURAL
STATE OF CALIFORNIA

CLIENT
COASTSIDE FIRE PROTECTION DISTRICT
PROJECT NUMBER
230137
DATE 12/05/25
DRAWN BY: GSL CHKED BY: JMM

REVISIONS

#	DESCRIPTION	DATE

SECTIONS

This document is for plan review only

S5.1

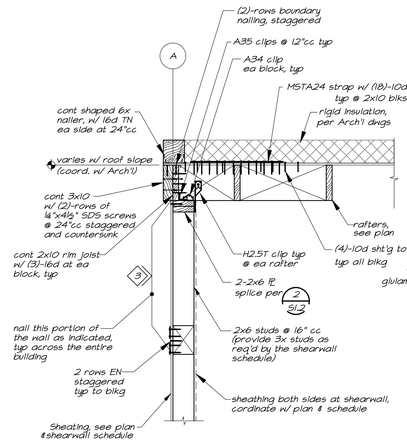

Section G 5.2 ¾"=1'-0"

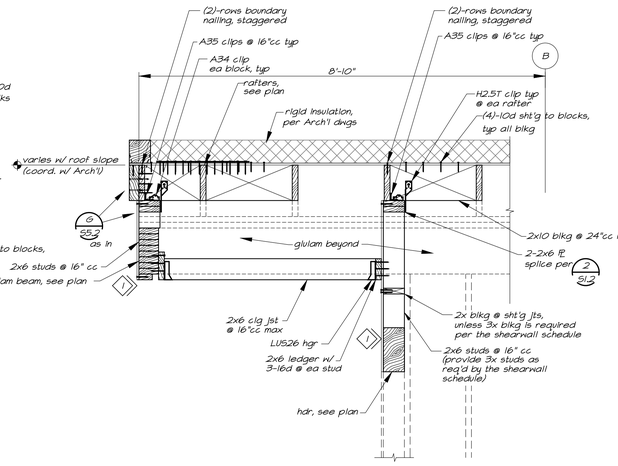

Section H 5.2 ¾"=1'-0"

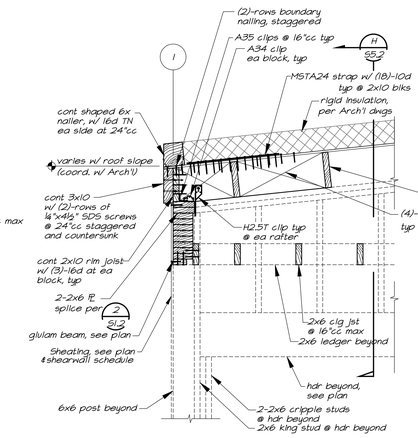

Section J 5.2 ¾"=1'-0"

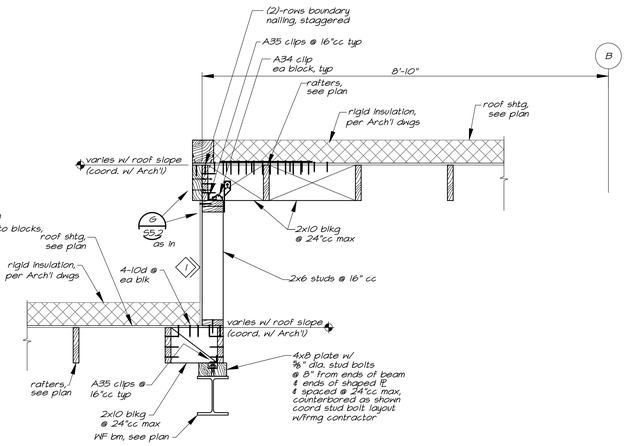

Section K 5.2 ¾"=1'-0"

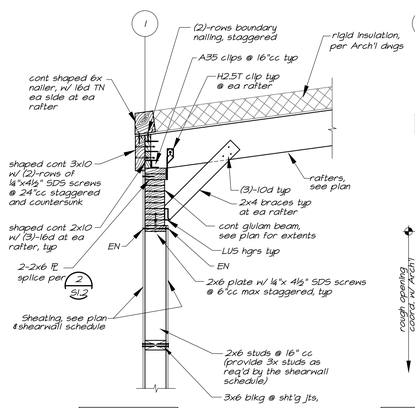

Typical Condition

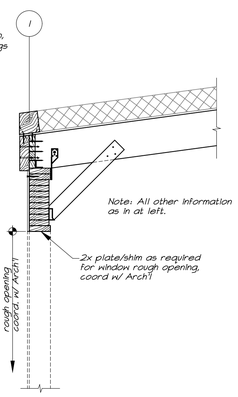

Condition at Windows

Section D 5.2 ¾"=1'-0"

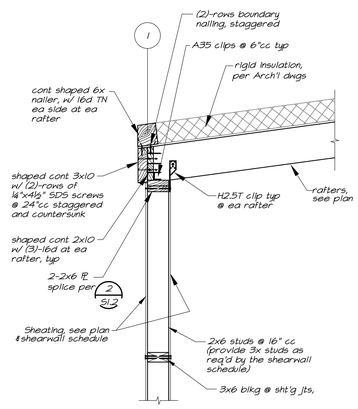

Section E 5.2 ¾"=1'-0"

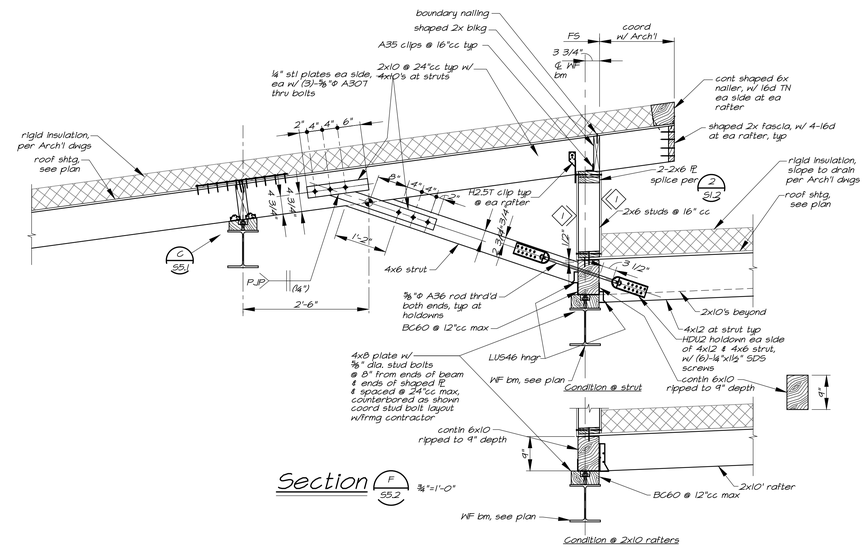

Section F 5.2 ¾"=1'-0"

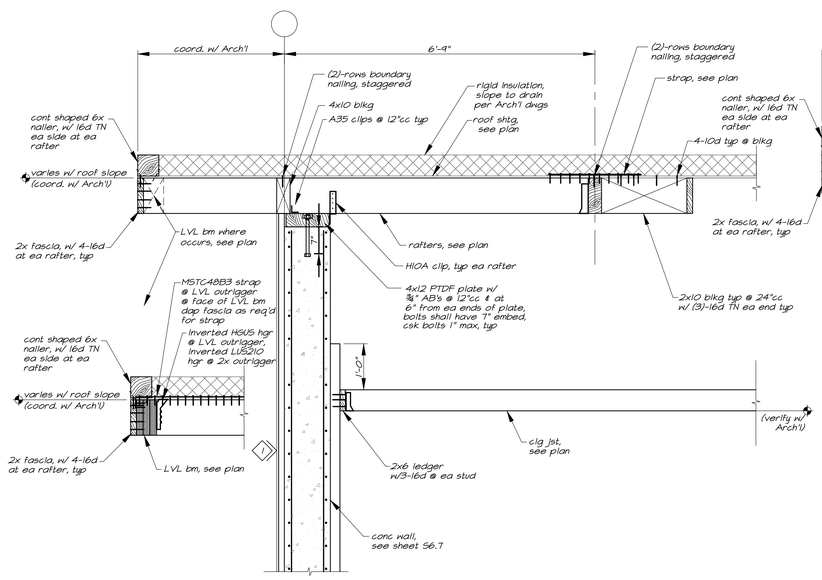

Section A 5.2 ¾"=1'-0"

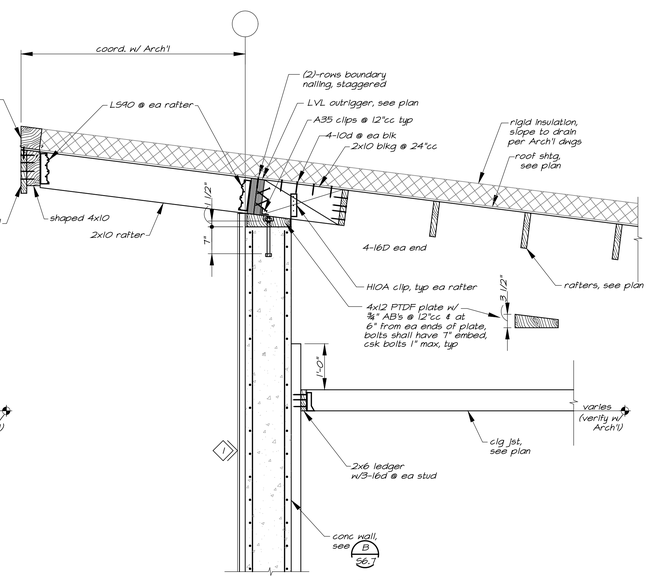

Section B 5.2 ¾"=1'-0"

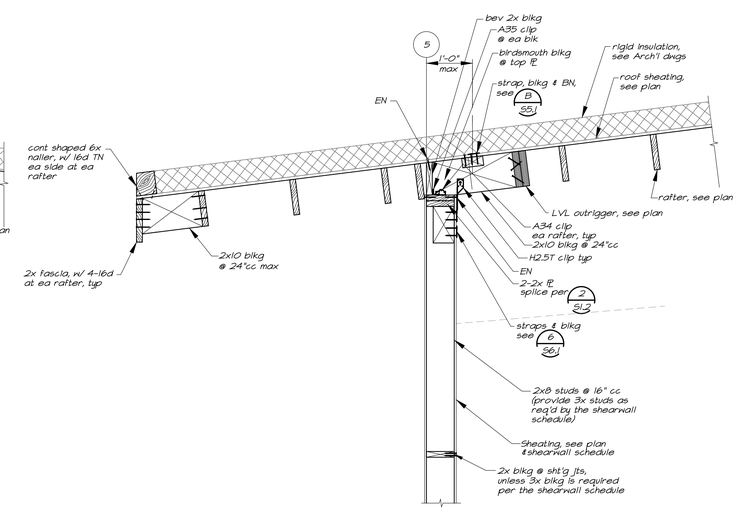

Section C 5.2 ¾"=1'-0"

PBK

ARCHITECT
PBK Architects, Inc.
PBK.com
SAN LUIS OBISPO
1327 Archer Street, Suite 110
San Luis Obispo, CA 93401
805-529-3076

CONSULTANT
MLA
STRUCTURAL ENGINEERS INC
1132 Suncast Lane, Suite 6
El Dorado Hills, CA 95762
phone: (916) 941-2425
fax: (916) 941-2429

FIRE STATION #44
COASTSIDE FIRE PROTECTION DISTRICT

501 STETSON STREET
MOSS BEACH, CA 94038
PLANNING SUBMITTAL

COASTSIDE FIRE PROTECTION DISTRICT EST 2000

BID SET

KEY PLAN

PLAN NORTH TRUE NORTH

STAMP
REGISTERED PROFESSIONAL ENGINEER
JOHN M. MANDSAGER
No.3824
Exp.09/30/26
STRUCTURAL
STATE OF CALIFORNIA

CLIENT
COASTSIDE FIRE PROTECTION DISTRICT

PROJECT NUMBER
230137

DATE 12/05/25

DRAWN BY: GSL CHKED BY: JMM

REVISIONS

#	DESCRIPTION	DATE

SECTIONS

This document is for plan review only

S5.2

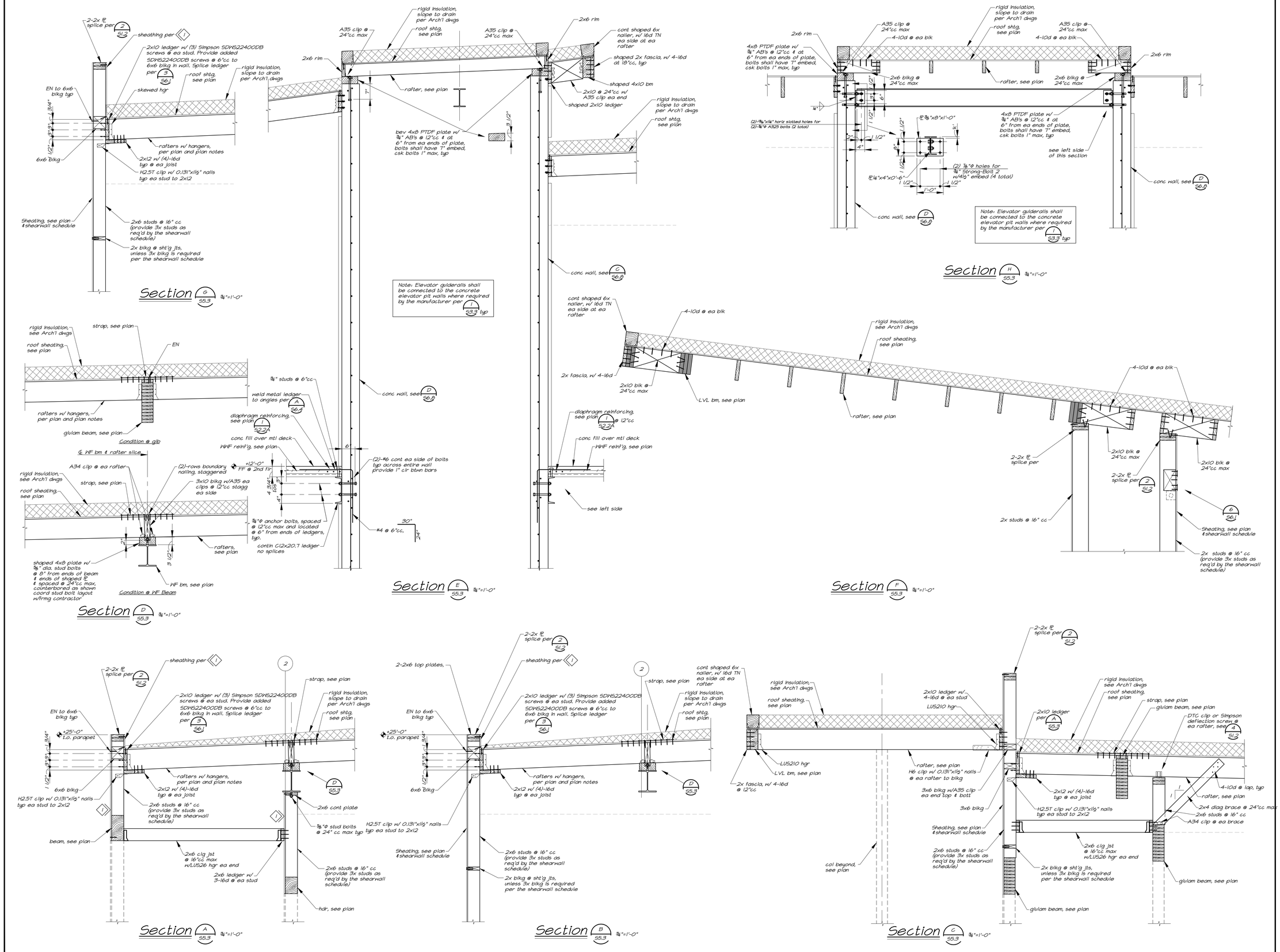

PBK
ARCHITECT PBK Architects, Inc.
PBK.com
SAN LUIS OBISPO
1327 Archer Street, Suite 110
San Luis Obispo, CA 93401
805-529-3076
CONSULTANT
MLA STRUCTURAL ENGINEERS INC
1132 Suncast Lane, Suite 6
El Dorado Hills, CA 95762
phone: (916) 941-2425
fax: (916) 941-2429

FIRE STATION #44
COASTSIDE FIRE PROTECTION DISTRICT

501 STETSON STREET
MOSS BEACH, CA 94038

PLANNING SUBMITTAL

BID SET

KEY PLAN

PLAN NORTH TRUE NORTH

STAMP
REGISTERED PROFESSIONAL ENGINEER
JOHN M. MANDSAGER
No.3824
Exp.09/30/26
STRUCTURAL
STATE OF CALIFORNIA

CLIENT
COASTSIDE FIRE PROTECTION DISTRICT

PROJECT NUMBER
230137

DATE	12/05/25
DRAWN BY: GSL	CHKED BY: JMM

REVISIONS

#	DESCRIPTION	DATE

SECTIONS

This document is for plan review only

S5.3

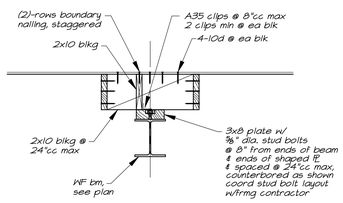

Section E/55.4 ¾"=1'-0"

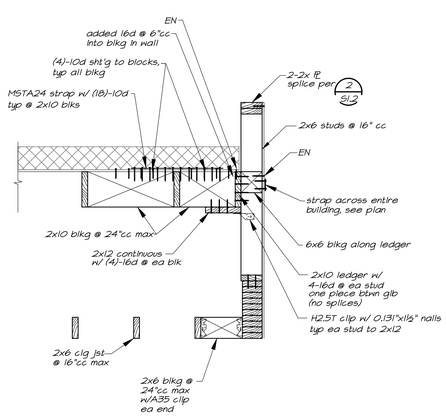

Section A/55.4 ¾"=1'-0"

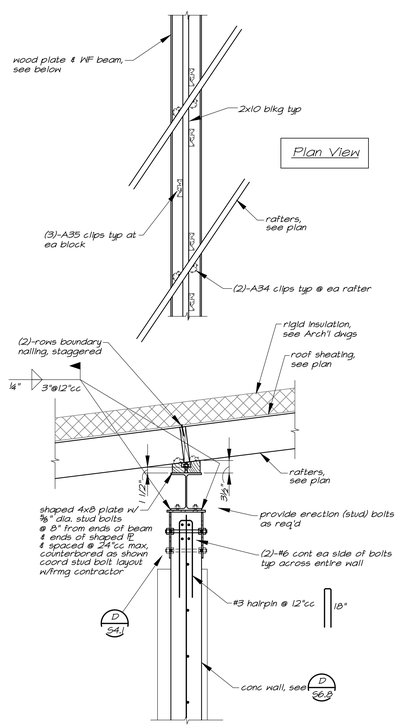

Section B/55.4 ¾"=1'-0"

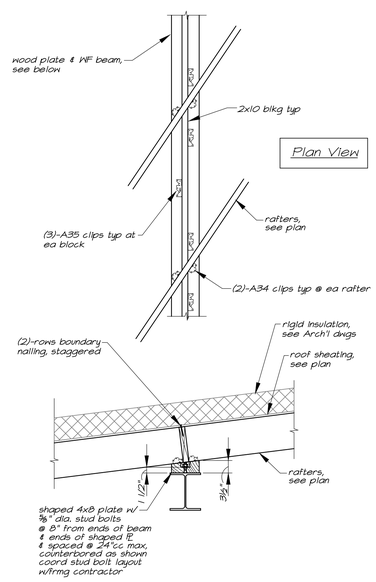

Section C/55.4 ¾"=1'-0"

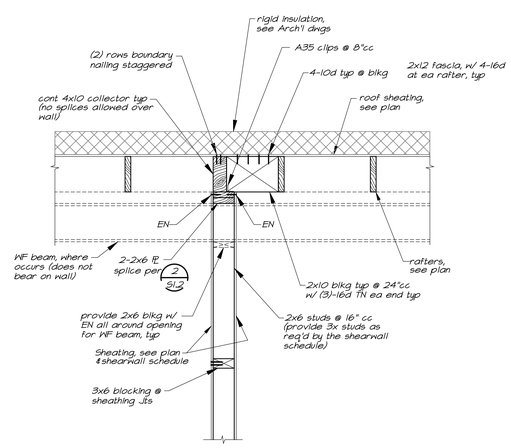

Section D/55.4 ¾"=1'-0"

PBK

ARCHITECT PBK Architects, Inc.
PBK.com

SAN LUIS OBISPO
1327 Archer Street, Suite 110
San Luis Obispo, CA 93401
805-529-3076

CONSULTANT

MLA
STRUCTURAL ENGINEERS INC

1132 Suncast Lane, Suite 6
El Dorado Hills, CA 95762
phone: (916) 941-2425
fax: (916) 941-2429

FIRE STATION #44
COASTSIDE FIRE PROTECTION DISTRICT

501 STETSON STREET
MOSS BEACH, CA 94038
PLANNING SUBMITTAL

BID SET

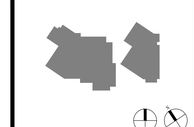

KEY PLAN

PLAN NORTH TRUE NORTH

STAMP

REGISTERED PROFESSIONAL ENGINEER
JOHN M. MANDSAGER
No.3824
Exp.09/30/26
STRUCTURAL
STATE OF CALIFORNIA

CLIENT
COASTSIDE FIRE PROTECTION DISTRICT

PROJECT NUMBER
230137

DATE 12/05/25

DRAWN BY: GSL CHKED BY: JMM

REVISIONS

#	DESCRIPTION	DATE

SECTIONS

This document is for plan review only

S5.4

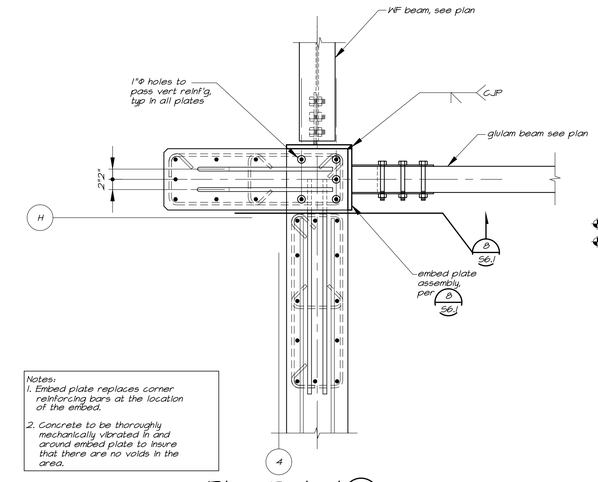

Notes:
1. Embed plate replaces corner reinforcing bars at the location of the embed.
2. Concrete to be thoroughly mechanically vibrated in and around embed plate to insure that there are no voids in the area.

Plan Detail 7/S6.1 1"=1'-0"

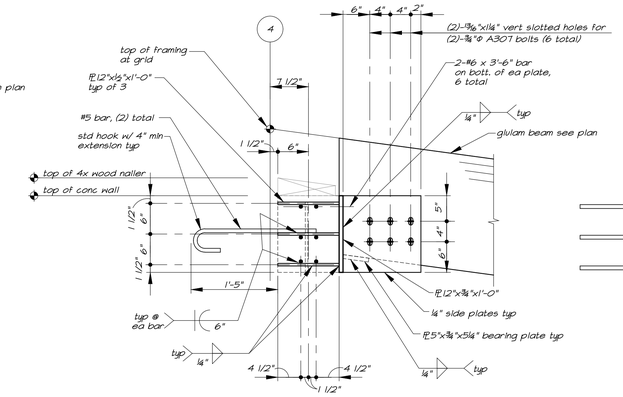

View Through Grid Line 4

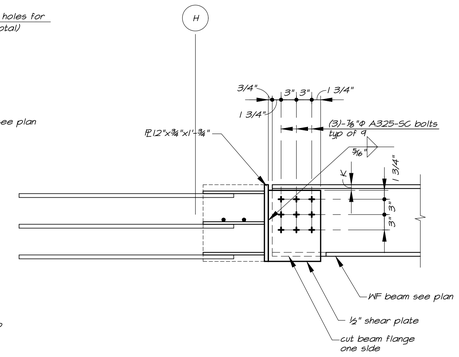

View Through Grid Line H

Plan Detail 8/S6.1 1"=1'-0"

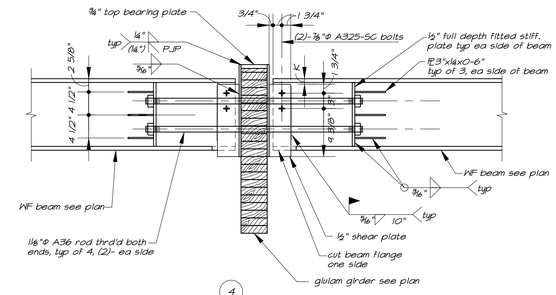

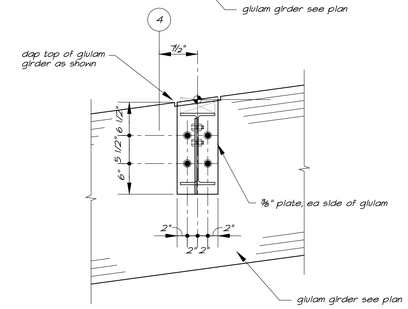

Detail 9/S6.1 1"=1'-0"

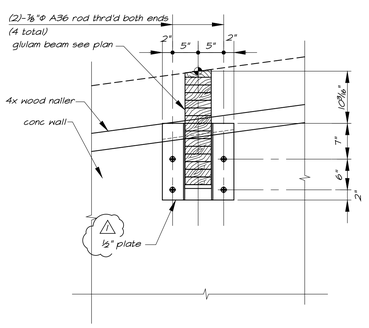

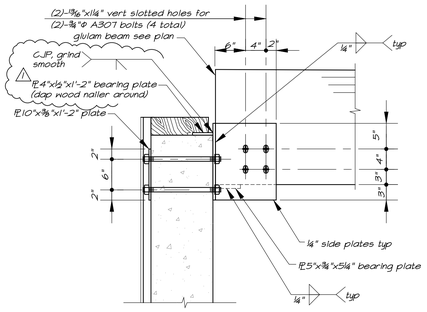

Detail 5/S6.1 1"=1'-0"

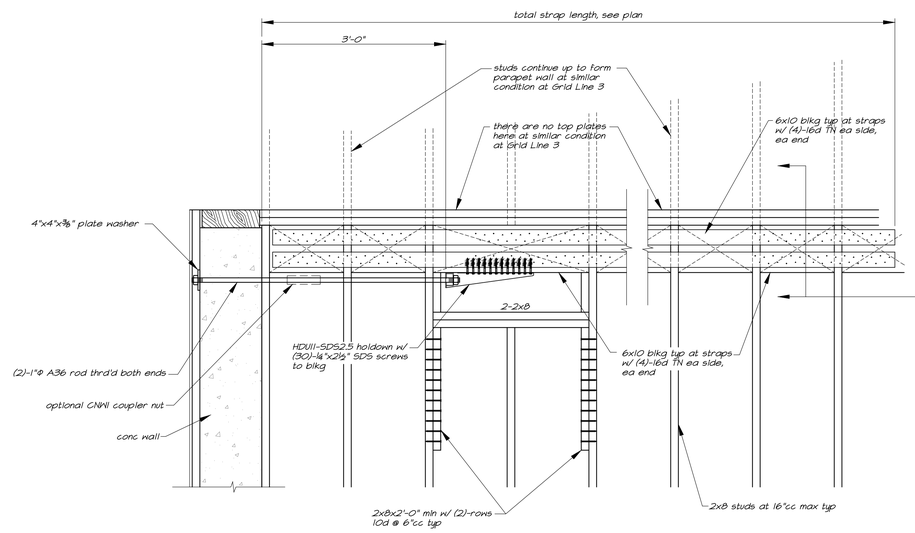

Detail 6/S6.1 1"=1'-0"

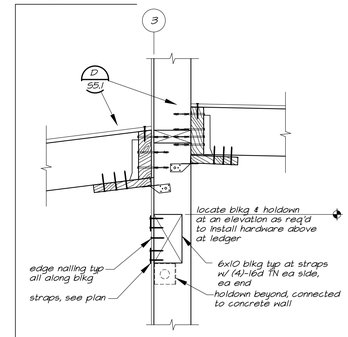

Section at Grid Line 3

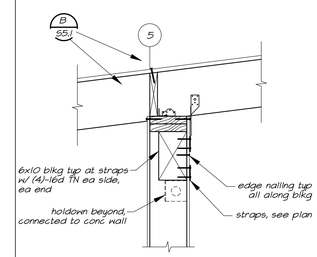

Section at Grid Line 5

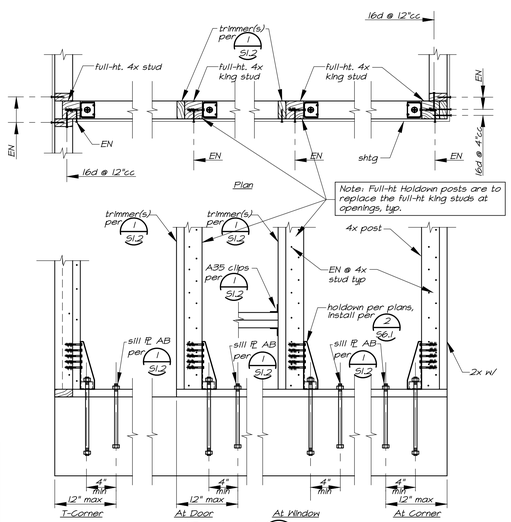

Detail 1/S6.1 1"=1'-0"
Single Holdown

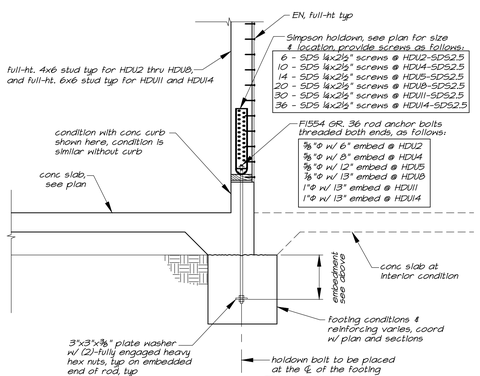

Detail 2/S6.1 ¾"=1'-0"

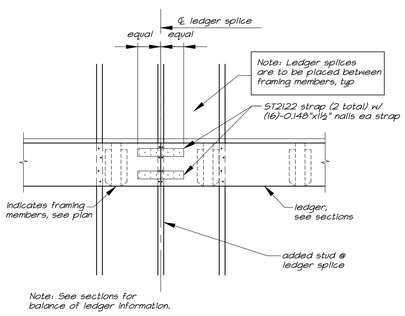

Note: See sections for balance of ledger information.

Detail 3/S6.1 ¾"=1'-0"

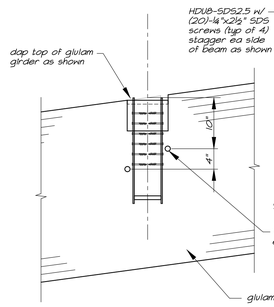

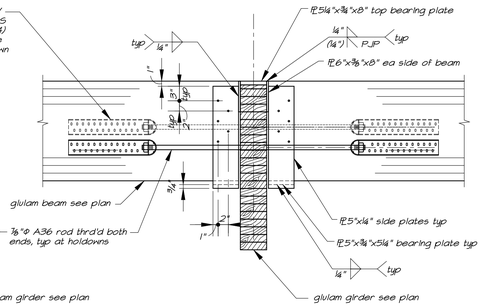

Detail 4/S6.1 1"=1'-0"

PBK
ARCHITECT
PBK Architects, Inc.
PBK.com
SAN LUIS OBISPO
1327 Archer Street, Suite 110
San Luis Obispo, CA 93401
805-529-3076

CONSULTANT
MLA
STRUCTURAL ENGINEERS INC
1132 Suncast Lane, Suite 6
El Dorado Hills, CA 95762
phone: (916) 941-2425
fax: (916) 941-2429

FIRE STATION #44
COASTSIDE FIRE PROTECTION DISTRICT

501 STETSON STREET
MOSS BEACH, CA 94038
PLANNING SUBMITTAL

COASTSIDE FIRE PROTECTION DISTRICT EST. 2002

BID SET

KEY PLAN
PLAN NORTH
TRUE NORTH

STAMP
REGISTERED PROFESSIONAL ENGINEER
JOHN M. MANDSAGER
No.3824
Exp.09/30/26
STRUCTURAL
STATE OF CALIFORNIA

CLIENT
COASTSIDE FIRE PROTECTION DISTRICT
PROJECT NUMBER
230137
DATE 12/05/25
DRAWN BY: GSL CHKED BY: JMM

REVISIONS

#	DESCRIPTION	DATE

DETAILS

This document is for plan review only

S6.1

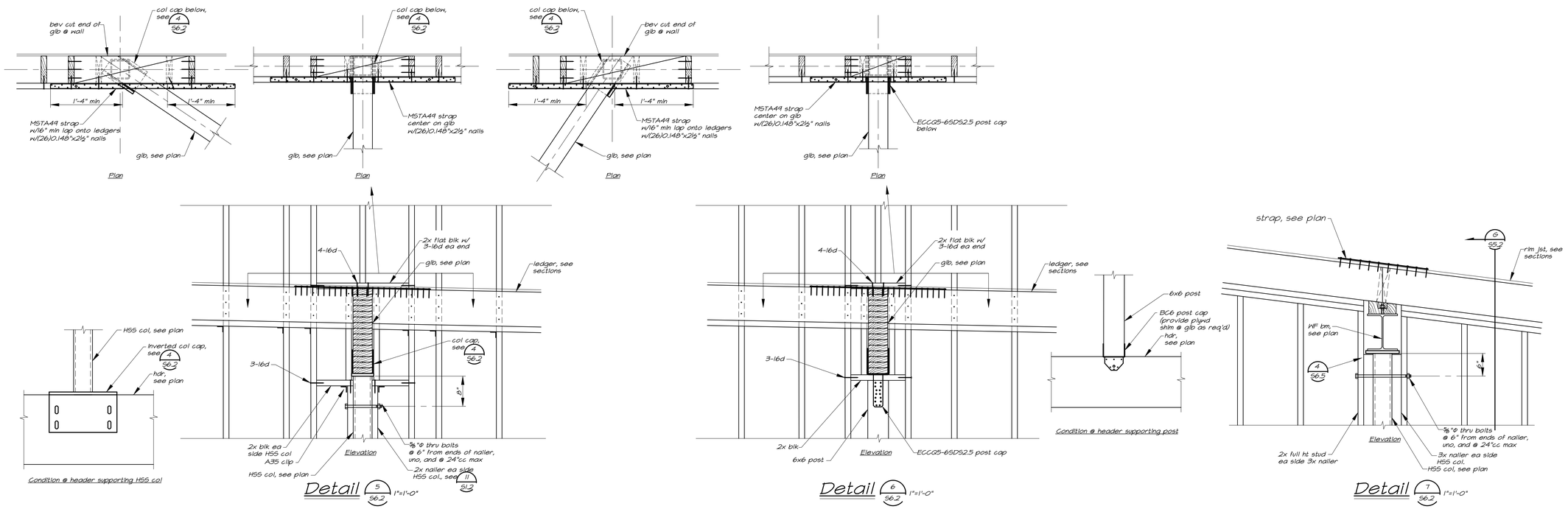

PBK

ARCHITECT PBK Architects, Inc.
PBK.com
SAN LUIS OBISPO
1327 Archer Street, Suite 110
San Luis Obispo, CA 93401
805-529-3076

CONSULTANT
MLA STRUCTURAL ENGINEERS INC
1132 Suncast Lane, Suite 6
El Dorado Hills, CA 95762
phone: (916) 941-2425
fax: (916) 941-2429

FIRE STATION #44
COASTSIDE FIRE PROTECTION DISTRICT

501 STETSON STREET
MOSS BEACH, CA 94038
PLANNING SUBMITTAL

COASTSIDE FIRE PROTECTION DISTRICT EST 2007

BID SET

KEY PLAN
PLAN NORTH
TRUE NORTH

STAMP
REGISTERED PROFESSIONAL ENGINEER
JOHN M. MANDSAGER
No.3824
Exp.09/30/26
STRUCTURAL
STATE OF CALIFORNIA

CLIENT
COASTSIDE FIRE PROTECTION DISTRICT
PROJECT NUMBER
230137
DATE 12/05/25
DRAWN BY: GSL CHKED BY: JMM
REVISIONS

#	DESCRIPTION	DATE

DETAILS

This document is for plan review only

S6.2

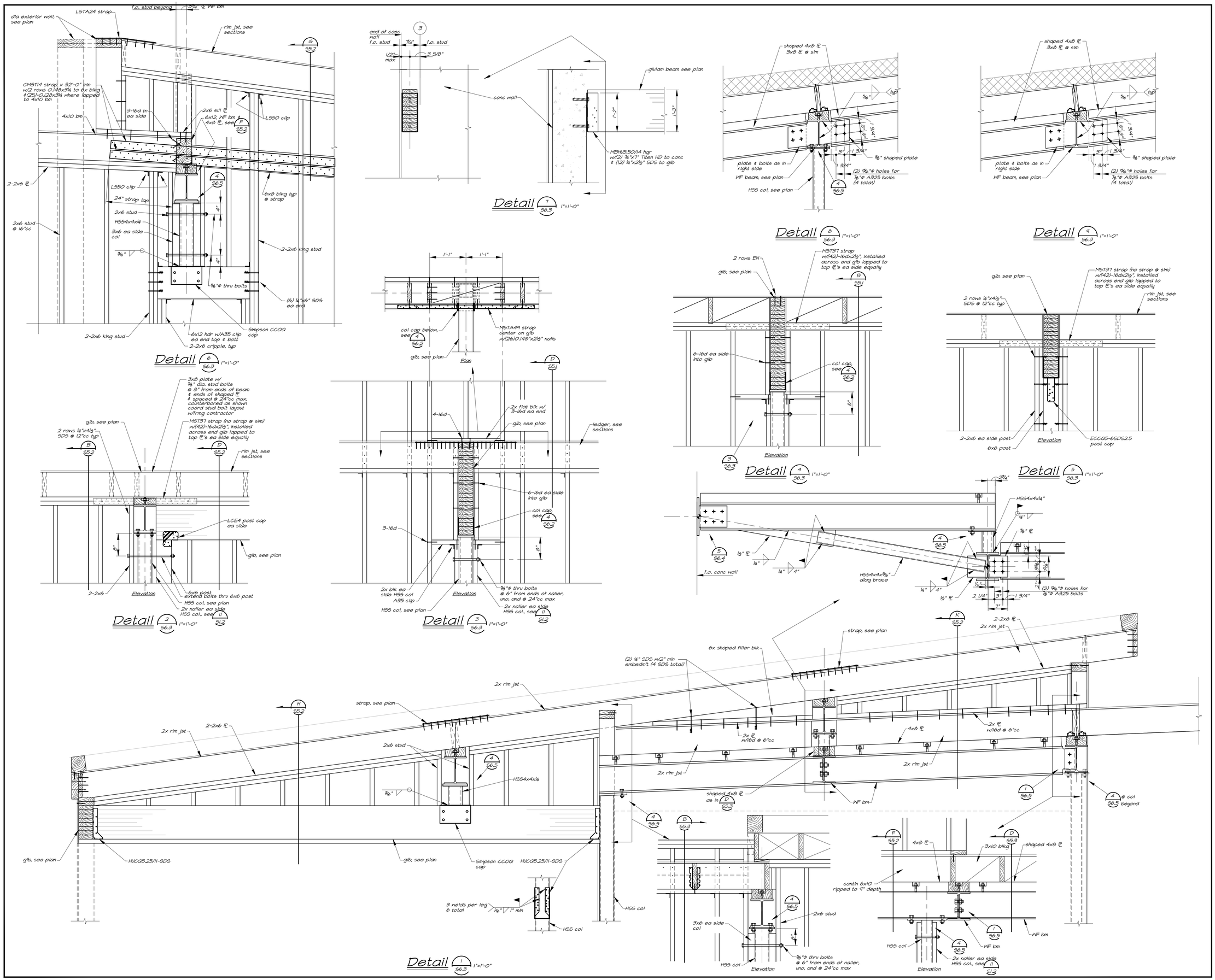

PBK

ARCHITECT
PBK Architects, Inc.
PBK.com
SAN LUIS OBISPO
1327 Archer Street, Suite 110
San Luis Obispo, CA 93401
805-529-3076

CONSULTANT
MLA
STRUCTURAL ENGINEERS INC
1132 Suncast Lane, Suite 6
El Dorado Hills, CA 95762
phone: (916) 941-2425
fax: (916) 941-2429

FIRE STATION #44
COASTSIDE FIRE PROTECTION DISTRICT

501 STETSON STREET
MOSS BEACH, CA 94038
PLANNING SUBMITTAL

BID SET

KEY PLAN
PLAN NORTH
TRUE NORTH

STAMP
REGISTERED PROFESSIONAL ENGINEER
JOHN M. MANDSAGER
No.3824
Exp.09/30/26
STRUCTURAL
STATE OF CALIFORNIA

CLIENT
COASTSIDE FIRE PROTECTION DISTRICT
PROJECT NUMBER
230137

DATE	12/05/25		
DRAWN BY:	GSL	CHKED BY:	JMM

REVISIONS

#	DESCRIPTION	DATE

DETAILS

This document is for plan review only

S6.3

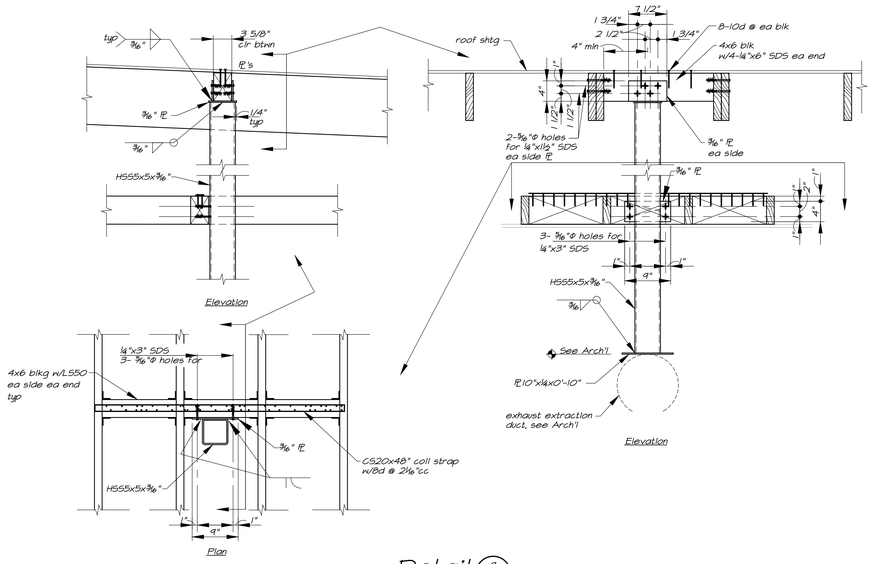

Detail 9/S6.4 1"=1'-0"

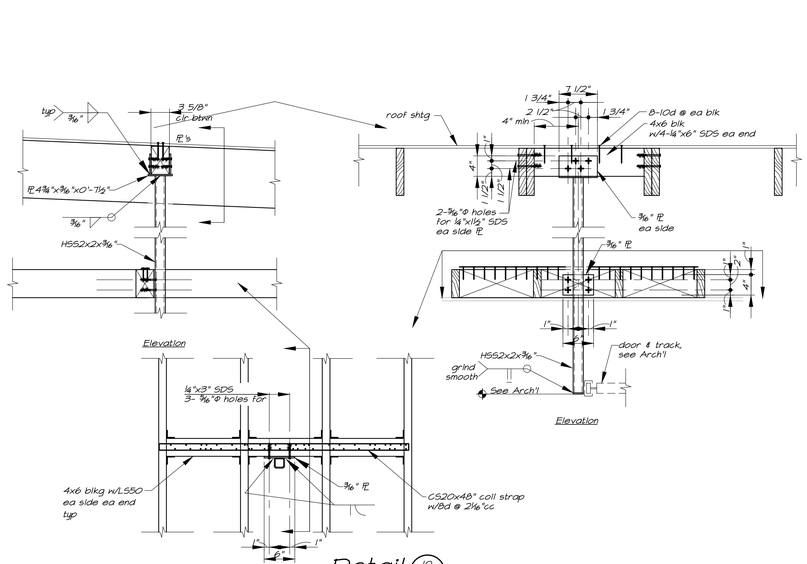

Detail 10/S6.4 1"=1'-0"

Deck Connection Schedule (A/S6.4)

Deck Type	Depth & Gauge	Perpendicular Supports	Parallel Supports	Side Laps	Notes
Verco B-36 floor deck	1 1/2"x18 ga	4-3/4"Φ P.W. per sheet	3/4"Φ P.W. @ 24"cc	B.P. @ 24"cc	

1. P.W. = puddle weld; T.S.W. = top seam weld; D.P. = drive pins; B.P. = button punch; N.A. = not applicable.
2. Metal decking shall be manufactured by Verco or approved equal, of type and gauge shown, and connected as shown above.
3. At floor decks, 3/4"Φ shear studs may be substituted for 3/4"Φ puddle welds.
4. See B/S6.4 for typical weld patterns.
5. No conduit or non-structural items may be placed in concrete over metal deck.
6. Deck shall be 2-span minimum, typical.
7. See Metal Deck Notes on sheet S1.2.
8. All concrete fill over metal deck shall be reinforced w/ 6x6-W2.9xW2.9 WWF @ mid-depth of concrete topping typical. For additional reinforcing, see Diaphragm Reinforcing Plan on sheet S2.2.
9. All metal deck receiving concrete fill shall have factory-punched vent tabs to provide 1% ventilation.

Metal Deck Connection Patterns (B/S6.4)

Deck Type	Profile	Connections per sheet
B-36 floor deck	36"	4 - P.W.

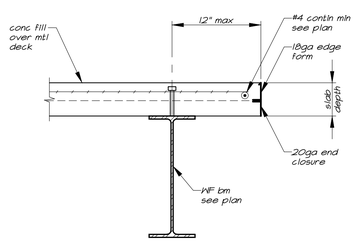

Detail 5/S6.4 1"=1'-0"
Deck perpendicular to slab edge

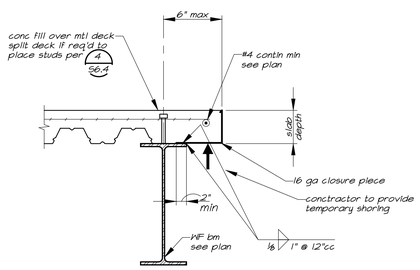

Detail 6/S6.4 1"=1'-0"
Deck parallel to slab edge

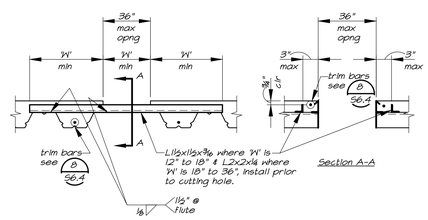

NOTE:
Applies to opngs from 12" to 36" wide in mtl deck with concrete fill.

Detail 7/S6.4 1"=1'-0"

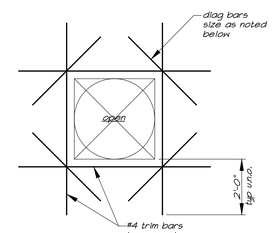

NOTE:
1. Applies @ opng's from 12" to 36" wide in conc slabs over mtl decking.
2. Provide #4x4'-0" diag @ ea corner of all opng's in conc fill over mtl deck.
3. Provide 2-#5x6'-0" diag @ ea corner of all major floor opng's (greater than 36" wide) @ elevator shafts, stairs, main duct shafts, etc.
4. Provide 2-#5 trim bars @ edges of all major floor opng's (greater than 36" wide) to extend 4'-0" min beyond opng typ.

Detail 8/S6.4 1"=1'-0"
Slab reinforcing @ opening in composite (conc fill over metal) deck

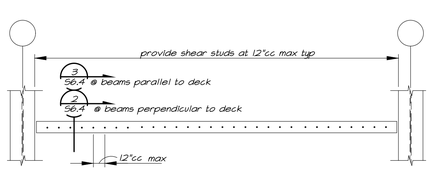

Typical WF Beam or Girder

NOTE:
1. Shear Connectors for composite beams shall be automatic end welded high strength 3/4"Φ Nelson headed anchors or approved equivalent. See "Automatic End Welded Stud Notes" on typical notes sheet.
2. All welding of shear connectors shall conform to the latest edition for "Recommended Practices for Stud Welding" and "Structural Welding Code" published by the American Welding Society.
3. Shear connectors shall be 3 1/4" long after welding.
4. Shear connectors shall be provided at all beams receiving metal deck and concrete fill. The shear connectors shall be uniformly spaced at 12"cc max.
5. Contractor shall submit shop drawings for review prior to install.

Detail 1/S6.4 3/16"=1'-0"

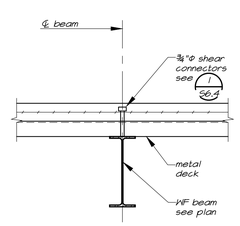

Detail 2/S6.4 1"=1'-0"
@ typical beam perpendicular to deck

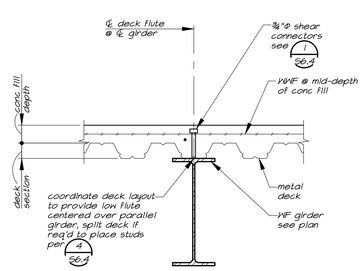

Detail 3/S6.4 1"=1'-0"
@ typical girder

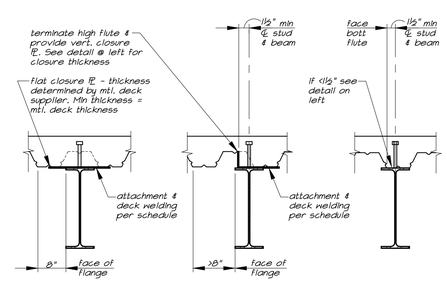

Detail 4/S6.4 1"=1'-0"
metal deck parallel to bm

PBK
ARCHITECT PBK Architects, Inc.
PBK.com
SAN LUIS OBISPO
1327 Archer Street, Suite 110
San Luis Obispo, CA 93401
805-529-3076

CONSULTANT
MLA
STRUCTURAL ENGINEERS INC
1132 Suncast Lane, Suite 6
El Dorado Hills, CA 95762
phone: (916) 941-2425
fax: (916) 941-2429

FIRE STATION #44
COASTSIDE FIRE PROTECTION DISTRICT

501 STETSON STREET
MOSS BEACH, CA 94038
PLANNING SUBMITTAL

BID SET

KEY PLAN
PLAN NORTH
TRUE NORTH

STAMP
REGISTERED PROFESSIONAL ENGINEER
JOHN M. MANDSAGER
No.3824
Exp.09/30/26
STRUCTURAL
STATE OF CALIFORNIA

CLIENT
COASTSIDE FIRE PROTECTION DISTRICT
PROJECT NUMBER 230137
DATE 12/05/25
DRAWN BY: GSL CHKED BY: JMM

REVISIONS

#	DESCRIPTION	DATE

DETAILS

This document is for plan review only

S6.4

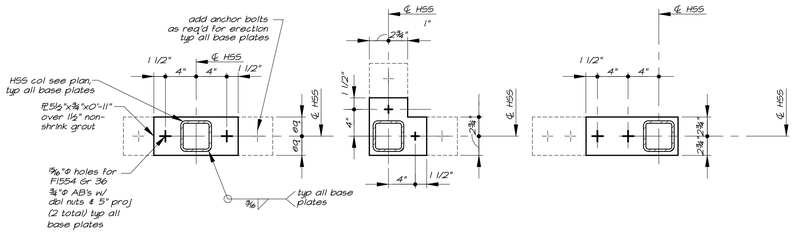

Note: See Foundation Plan for Base Plate type designations, typical.

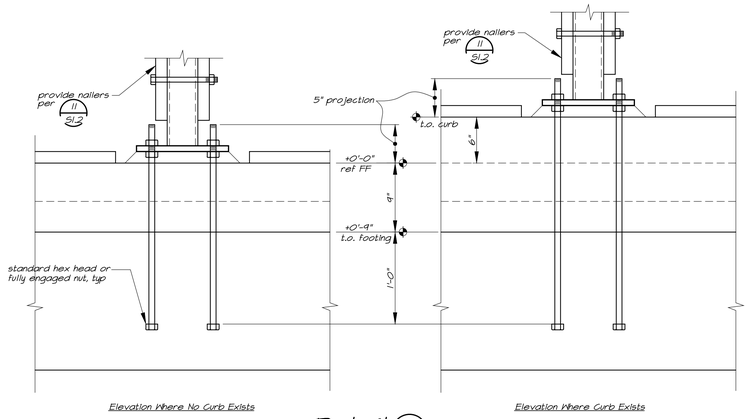

Detail 6/S6.5 1½"=1'-0"

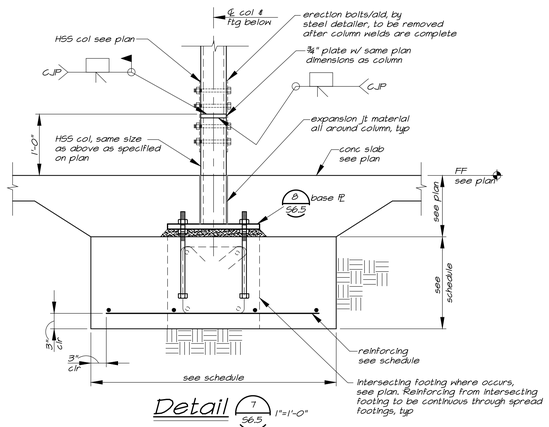

Detail 7/S6.5 1"=1'-0"

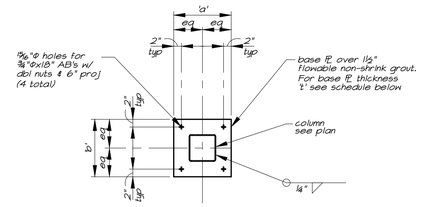

Base Plate BP4

Base Plate Schedule			
column size	base PL size		
	'a'	'b'	't'
HSS5x5	12"	12"	⅞"

Detail 8/S6.5 ¾"=1'-0"

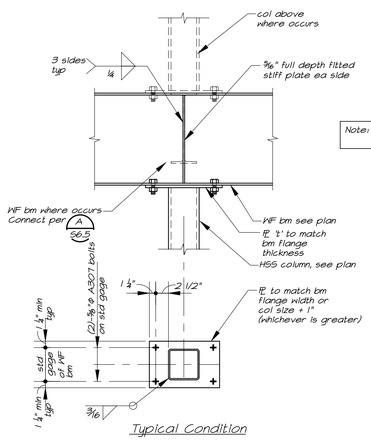

Note: Condition is similar at sloped beams.

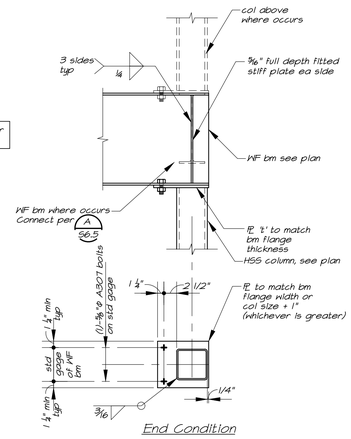

Detail 4/S6.5 1"=1'-0"

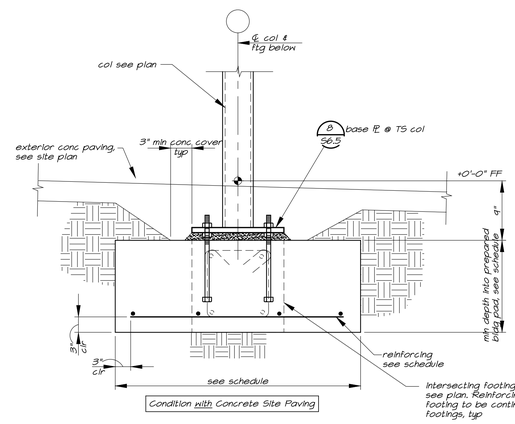

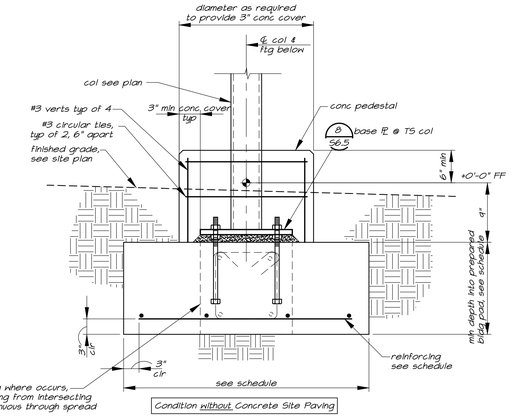

Detail 5/S6.5 1"=1'-0"

Connection Schedule (A/S6.5)			
bm size	No. & Dia. A325-N Bolts	shr PL 't'	W
C8 & C10	2 - ⅞"Φ	¼"	¼"
MC8 or MC10	2 - ⅞"Φ	¼"	¼"
W8 & W10	2 - ⅞"Φ	¼"	¼"
W12 & W14	3 - ⅞"Φ	5/16"	¼"
W16	4 - ⅞"Φ	⅜"	¼"
W18	5 - ⅞"Φ	⅜"	¼"
W21	5 - ⅞"Φ	⅜"	5/16"
W24	6 - ⅞"Φ	½"	5/16"
W27	7 - ⅞"Φ	½"	5/16"
W30	7 - ⅞"Φ	½"	⅜"
W33	8 - ⅞"Φ	⅜"	⅜"

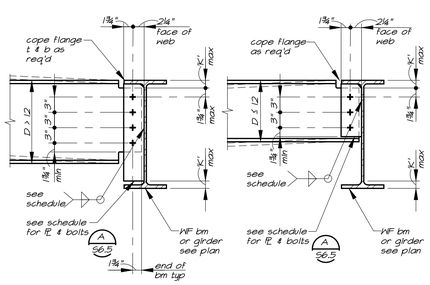

Detail 1/S6.5 1"=1'-0"
Bm to Bm - one side

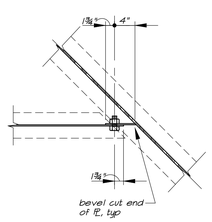

Plan @ Skewed Beams

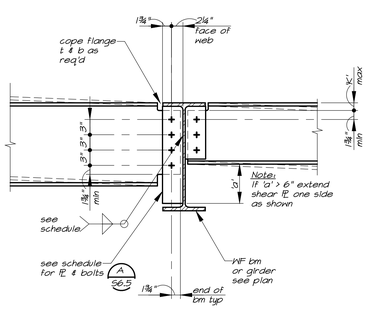

Detail 2/S6.5 1"=1'-0"
Bm to Bm - two sides

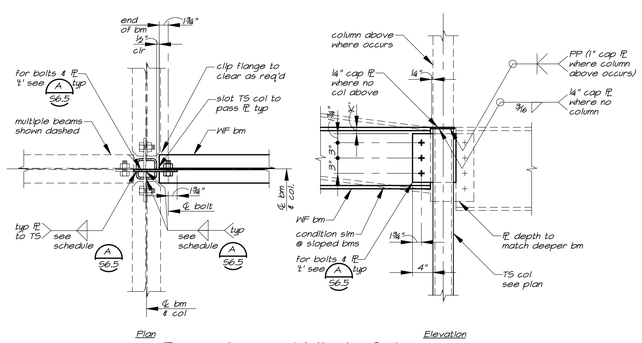

Beam One or Multiple Sides

Detail 3/S6.5 1"=1'-0"

PBK
ARCHITECT
PBK Architects, Inc.
PBK.com
SAN LUIS OBISPO
1327 Archer Street, Suite 110
San Luis Obispo, CA 93401
805-529-3076

CONSULTANT
MLA
STRUCTURAL ENGINEERS INC
1132 Suncast Lane, Suite 6
El Dorado Hills, CA 95762
phone: (916) 941-2425
fax: (916) 941-2429

FIRE STATION #44
COASTSIDE FIRE PROTECTION DISTRICT

501 STETSON STREET
MOSS BEACH, CA 94038
PLANNING SUBMITTAL

BID SET

KEY PLAN
PLAN NORTH
TRUE NORTH

STAMP
REGISTERED PROFESSIONAL ENGINEER
JOHN M. MANDSAGER
No.3824
Exp.09/30/26
STRUCTURAL
STATE OF CALIFORNIA

CLIENT
COASTSIDE FIRE PROTECTION DISTRICT
PROJECT NUMBER
230137
DATE 12/05/25
DRAWN BY: GSL CHKED BY: JMM

REVISIONS

#	DESCRIPTION	DATE

DETAILS

This document is for plan review only

S6.5

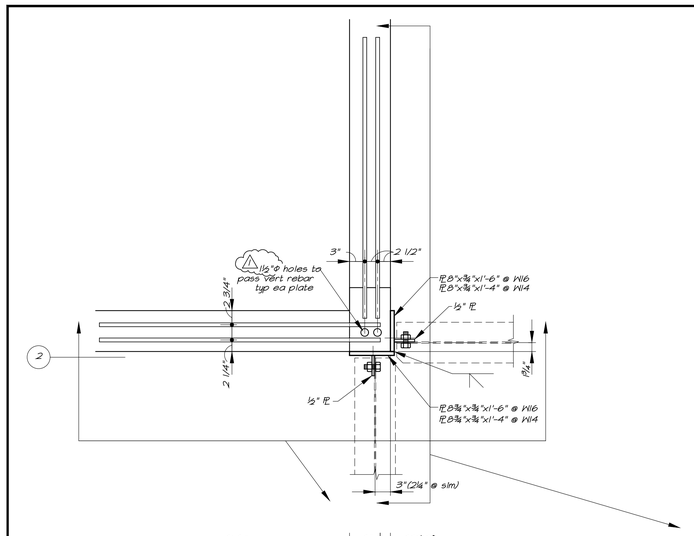

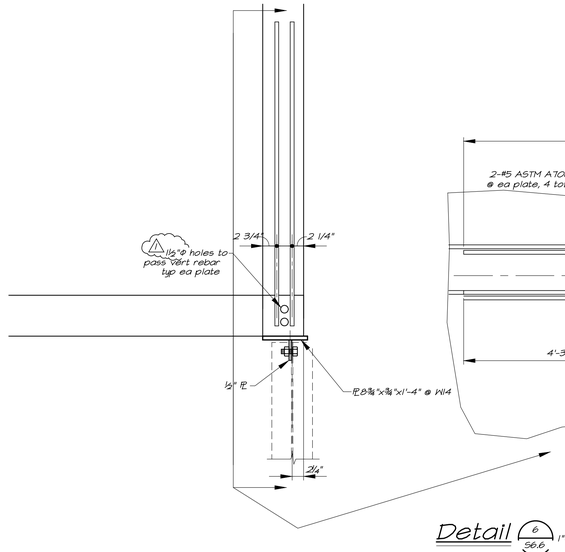

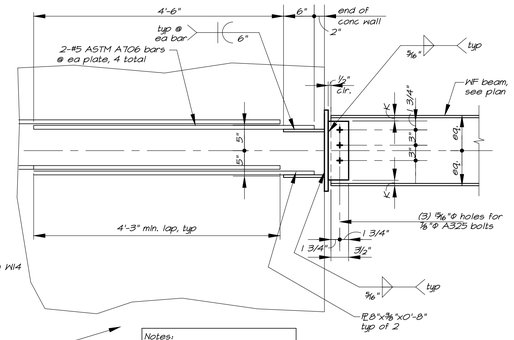

Notes:
1. Concrete to be thoroughly mechanically vibrated in and around embed plates to insure that there are no voids in the area.

Detail 6/S6.6 1"=1'-0"

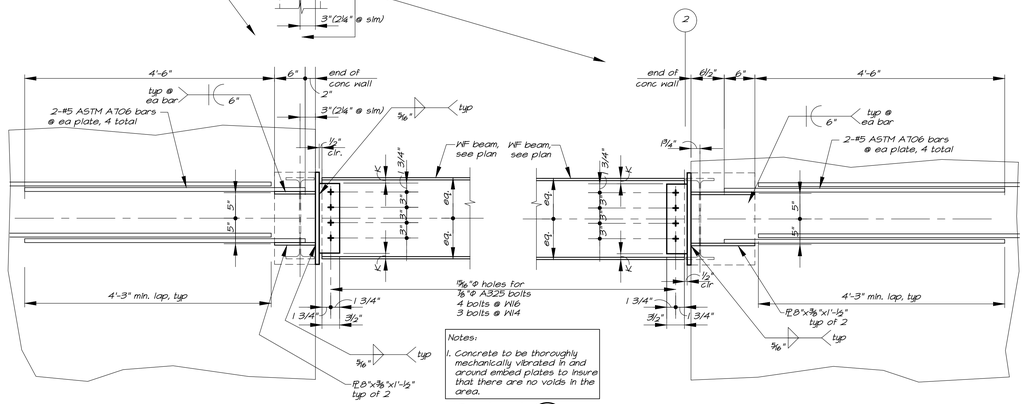

Notes:
1. Concrete to be thoroughly mechanically vibrated in and around embed plates to insure that there are no voids in the area.

Detail 5/S6.6 1"=1'-0"

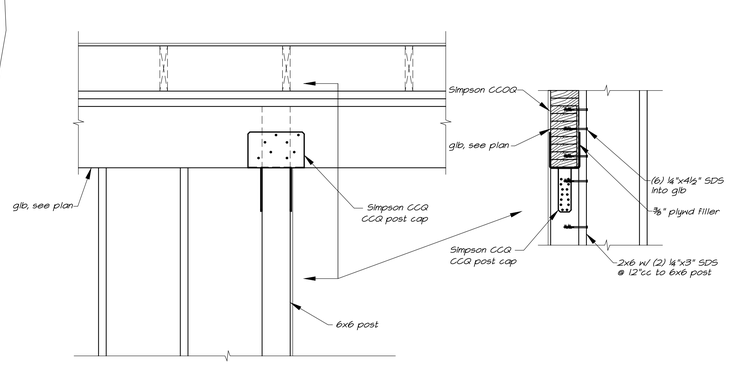

Detail 3/S6.6 1"=1'-0"

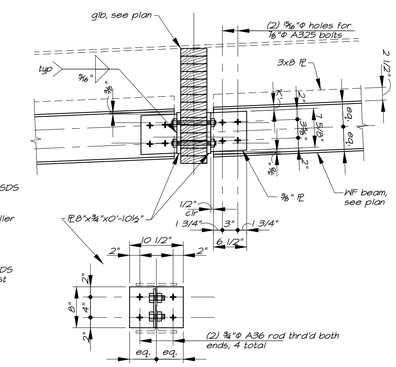

Detail 4/S6.6 1"=1'-0"

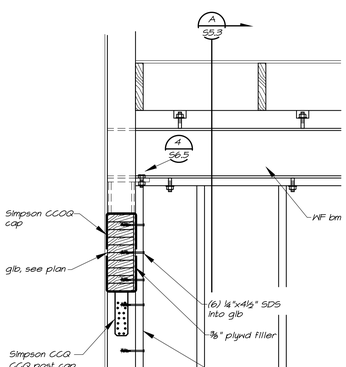

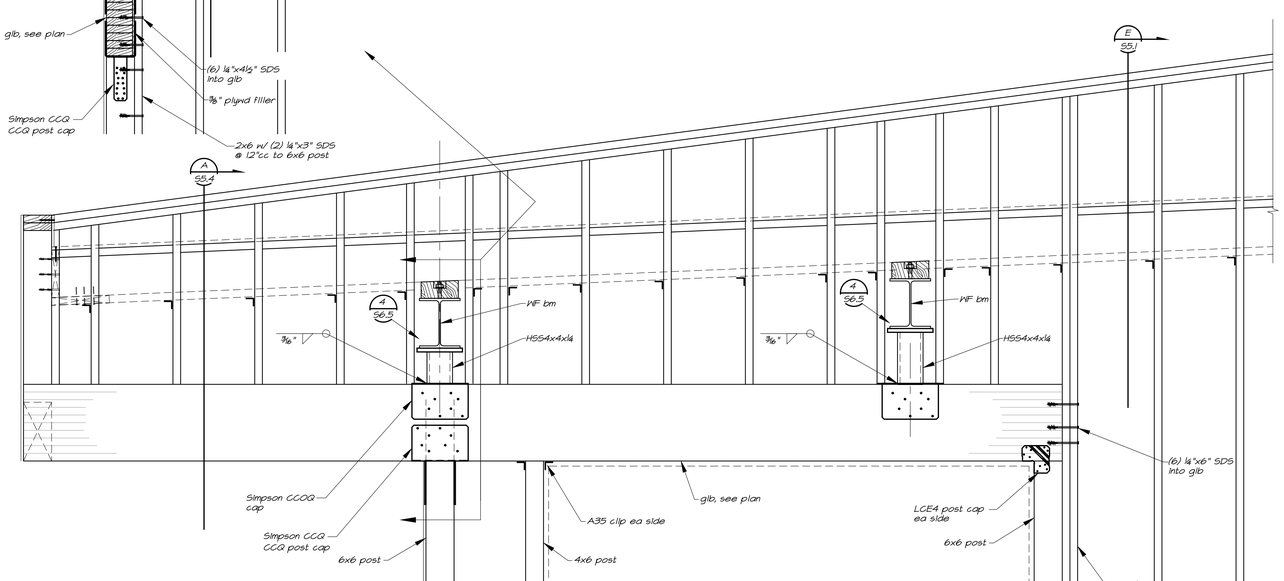

Detail 1/S6.6 1"=1'-0"

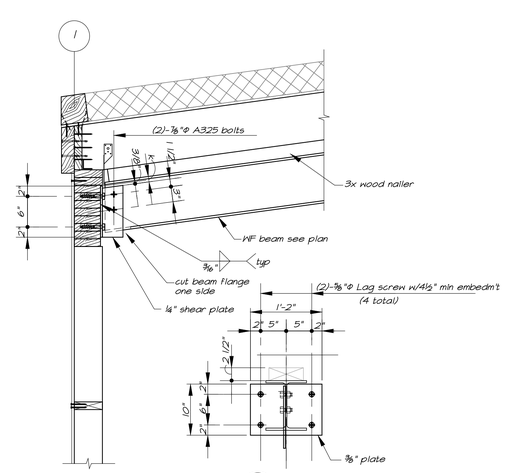

Detail 2/S6.6 1"=1'-0"

PBK

ARCHITECT PBK Architects, Inc.
PBK.com
SAN LUIS OBISPO
1327 Archer Street, Suite 110
San Luis Obispo, CA 93401
805-529-3076

CONSULTANT
MLA
STRUCTURAL ENGINEERS INC
1132 Suncast Lane, Suite 6
El Dorado Hills, CA 95762
phone: (916) 941-2425
fax: (916) 941-2429

FIRE STATION #44
COASTSIDE FIRE PROTECTION DISTRICT

501 STETSON STREET
MOSS BEACH, CA 94038
PLANNING SUBMITTAL

BID SET

KEY PLAN
PLAN NORTH
TRUE NORTH

STAMP
REGISTERED PROFESSIONAL ENGINEER
JOHN M. MANDSAGER
No.3824
Exp.09/30/26
STRUCTURAL
STATE OF CALIFORNIA

CLIENT
COASTSIDE FIRE PROTECTION DISTRICT
PROJECT NUMBER
230137
DATE 12/05/25
DRAWN BY: GSL CHKED BY: JMM

REVISIONS

#	DESCRIPTION	DATE

DETAILS

This document is for plan review only

S6.6

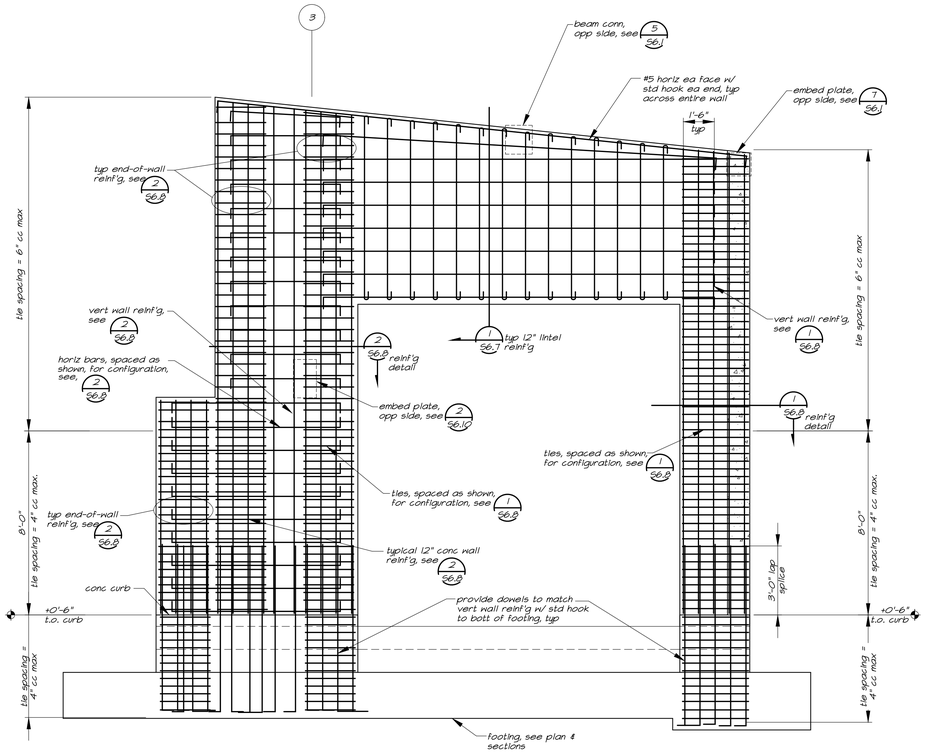

Concrete Wall Elevation C/S6.7 3/8"=1'-0"

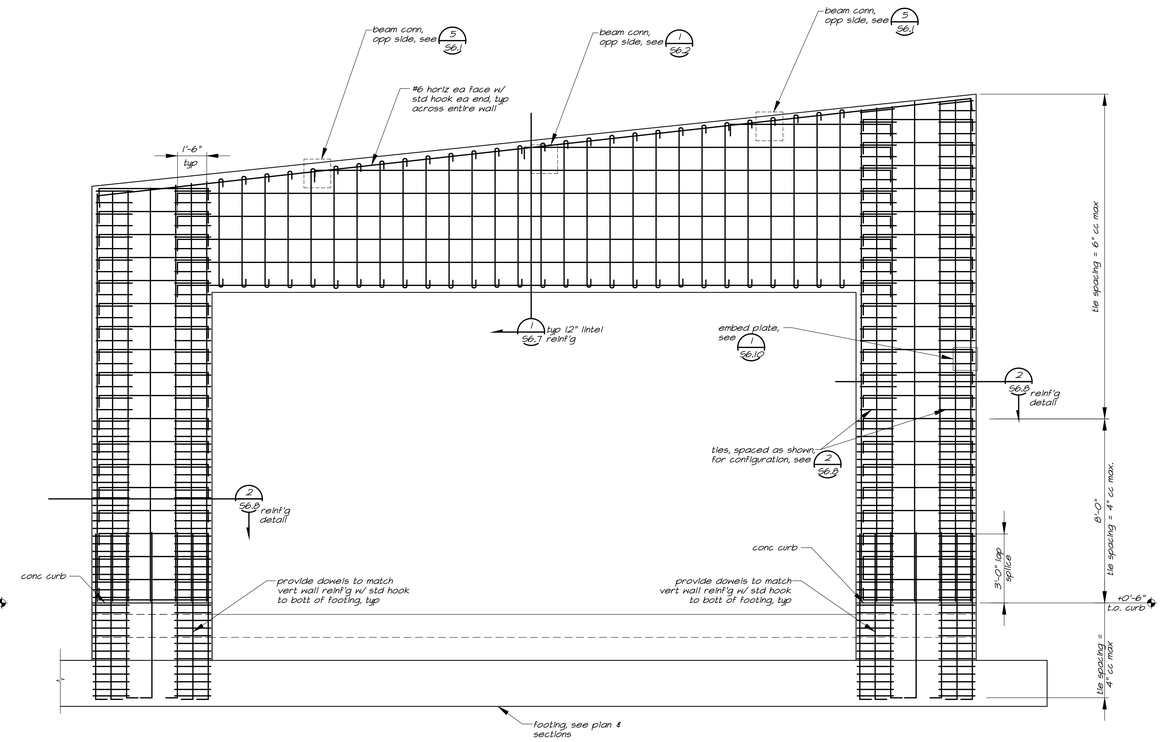

Concrete Wall Elevation D/S6.7 3/8"=1'-0"

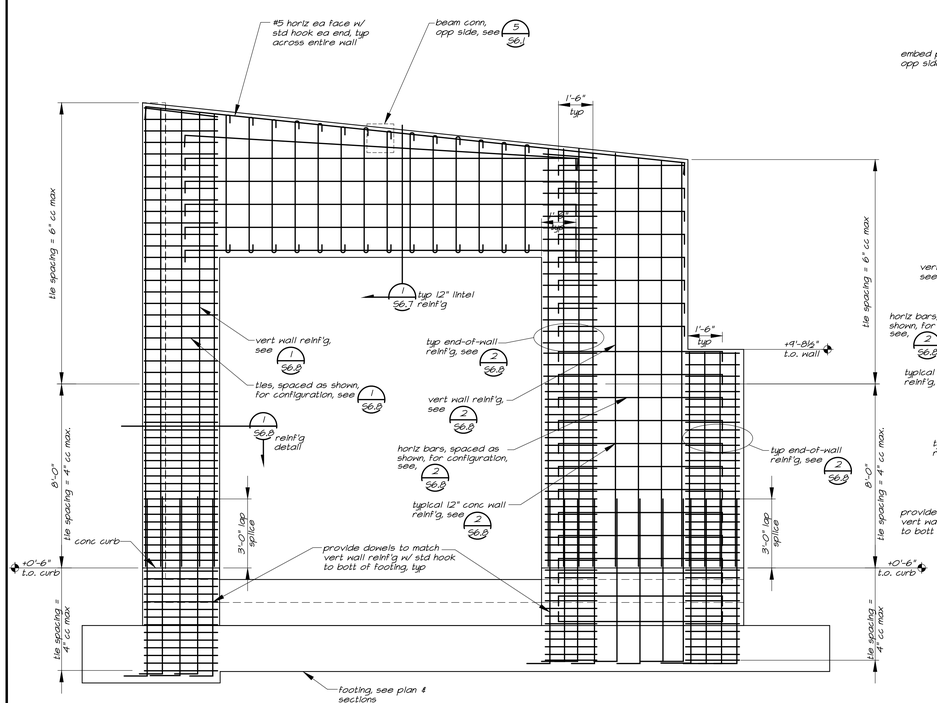

Concrete Wall Elevation A/S6.7 3/8"=1'-0"

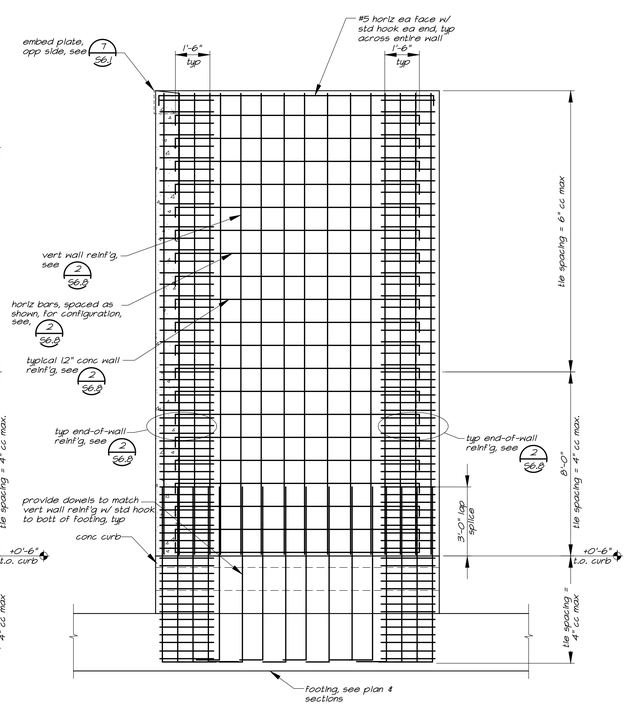

Concrete Wall Elevation B/S6.7 3/8"=1'-0"

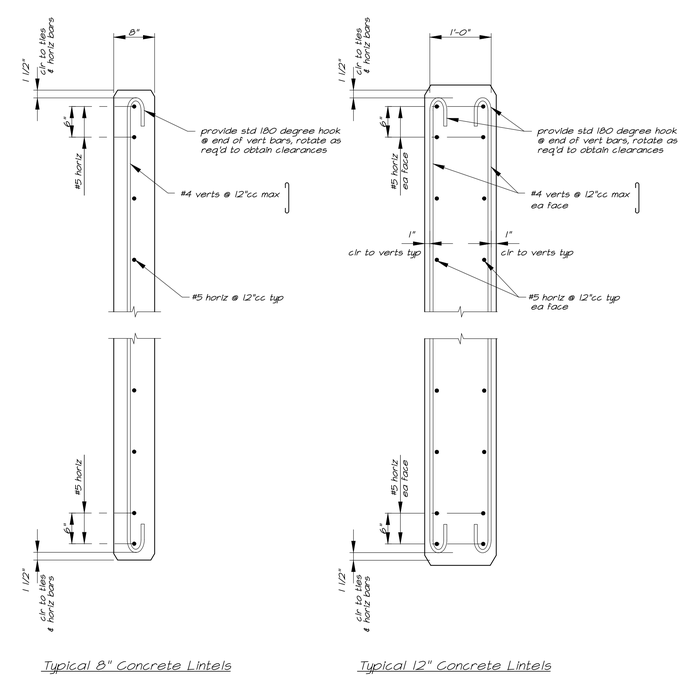

Typical 8" Concrete Lintels

Typical 12" Concrete Lintels

Detail 1/S6.7 1"=1'-0"

PBK
ARCHITECT PBK Architects, Inc.
PBK.com
SAN LUIS OBISPO
1327 Archer Street, Suite 110
San Luis Obispo, CA 93401
805-529-3076

CONSULTANT
MLA STRUCTURAL ENGINEERS INC
1132 Suncast Lane, Suite 6
El Dorado Hills, CA 95762
phone: (916) 941-2425
fax: (916) 941-2429

FIRE STATION #44
COASTSIDE FIRE PROTECTION DISTRICT

501 STETSON STREET
MOSS BEACH, CA 94038
PLANNING SUBMITTAL

BID SET

KEY PLAN
PLAN NORTH
TRUE NORTH

STAMP
REGISTERED PROFESSIONAL ENGINEER
JOHN M. MANDSAGER
No.3824
Exp.09/30/26
STRUCTURAL
STATE OF CALIFORNIA

CLIENT
COASTSIDE FIRE PROTECTION DISTRICT
PROJECT NUMBER
230137
DATE 12/05/25
DRAWN BY: GSL CHKED BY: JMM

REVISIONS

#	DESCRIPTION	DATE

DETAILS

This document is for plan review only

S6.7

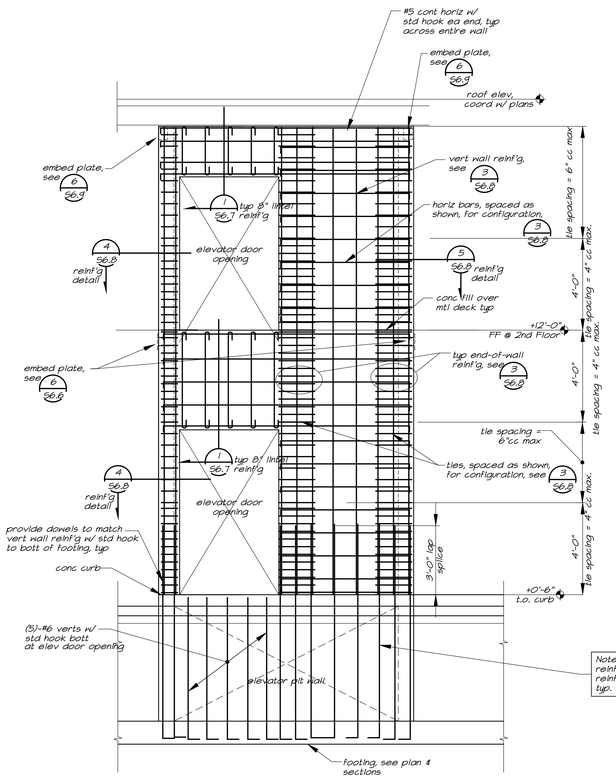

Concrete Wall Elevation C/S6.8 3/8"=1'-0"

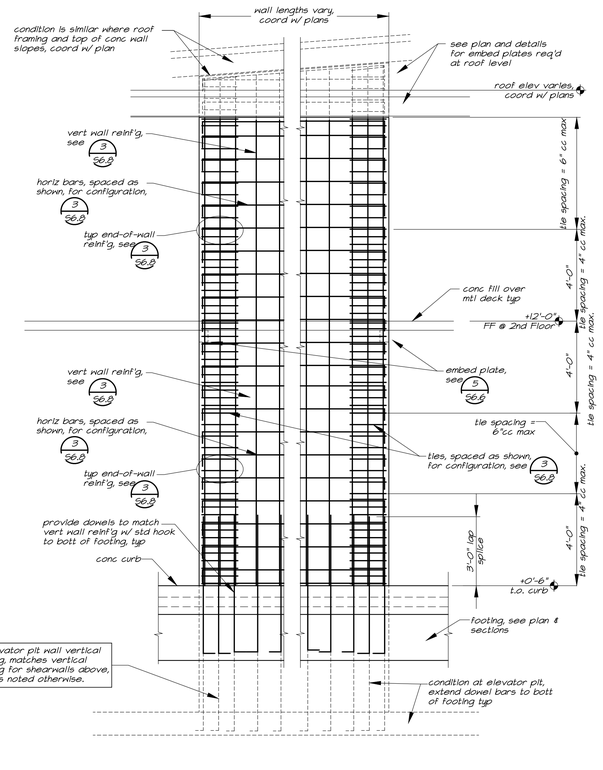

Concrete Wall Elevation D/S6.8 3/8"=1'-0"

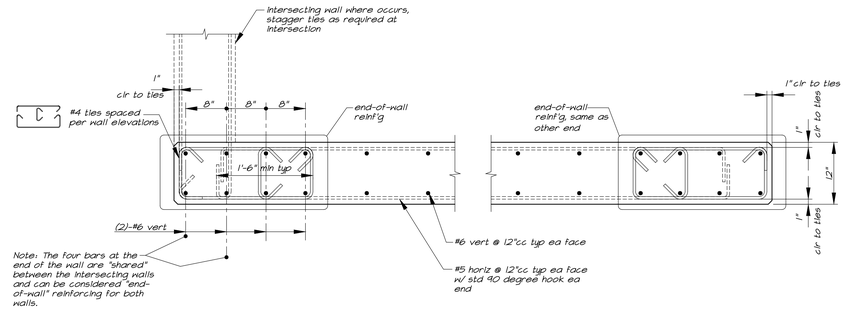

Plan Detail 2/S6.8 1"=1'-0"

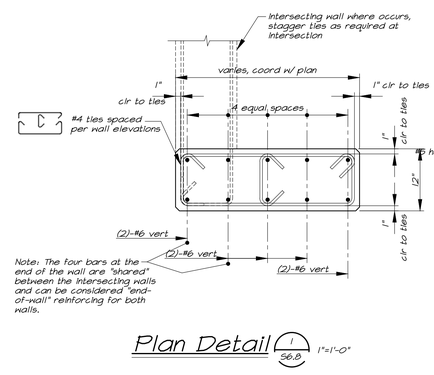

Plan Detail 1/S6.8 1"=1'-0"

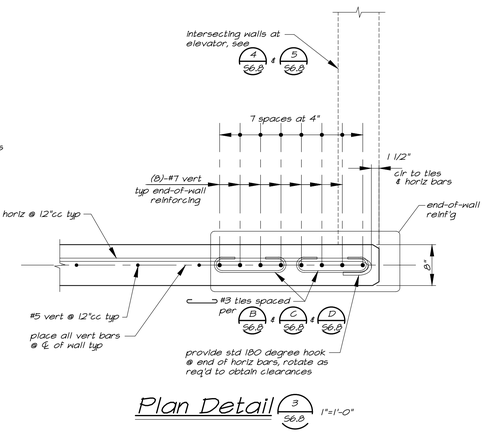

Plan Detail 3/S6.8 1"=1'-0"

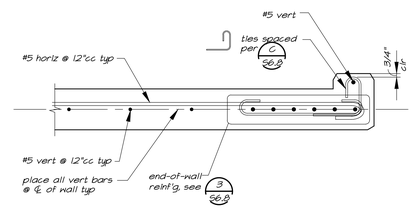

Plan Detail 4/S6.8 1"=1'-0"

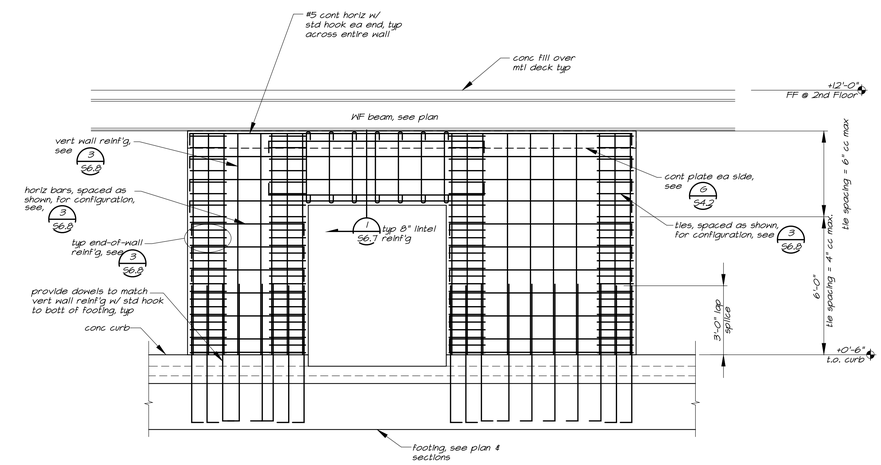

Concrete Wall Elevation A/S6.8 3/8"=1'-0"

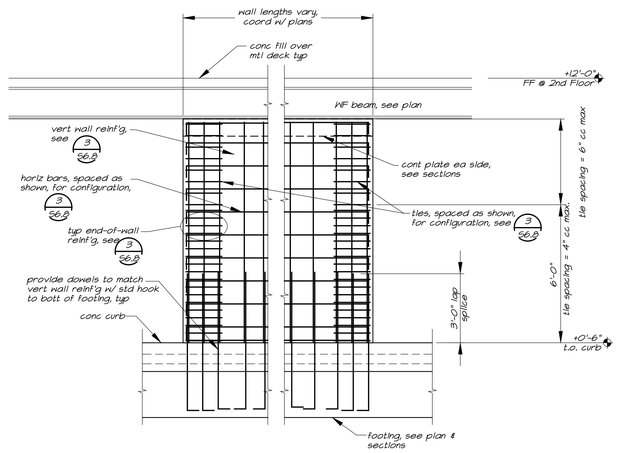

Concrete Wall Elevation B/S6.8 3/8"=1'-0"

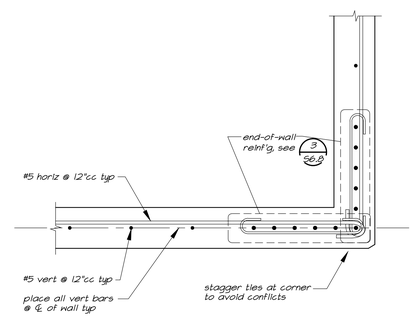

Plan Detail 5/S6.8 1"=1'-0"

PBK

ARCHITECT PBK Architects, Inc.
PBK.com
SAN LUIS OBISPO
1327 Archer Street, Suite 110
San Luis Obispo, CA 93401
805-529-3076

CONSULTANT
MLA STRUCTURAL ENGINEERS INC
1132 Suncast Lane, Suite 6
El Dorado Hills, CA 95762
phone: (916) 941-2425
fax: (916) 941-2429

FIRE STATION #44
COASTSIDE FIRE PROTECTION DISTRICT

501 STETSON STREET
MOSS BEACH, CA 94038
PLANNING SUBMITTAL

BID SET

KEY PLAN
PLAN NORTH TRUE NORTH

STAMP
REGISTERED PROFESSIONAL ENGINEER
JOHN M. MANDSAGER
No.3824
Exp.09/30/26
STRUCTURAL
STATE OF CALIFORNIA

CLIENT
COASTSIDE FIRE PROTECTION DISTRICT
PROJECT NUMBER
230137
DATE 12/05/25
DRAWN BY: GSL CHKED BY: JMM

REVISIONS

#	DESCRIPTION	DATE

DETAILS

This document is for plan review only

S6.8

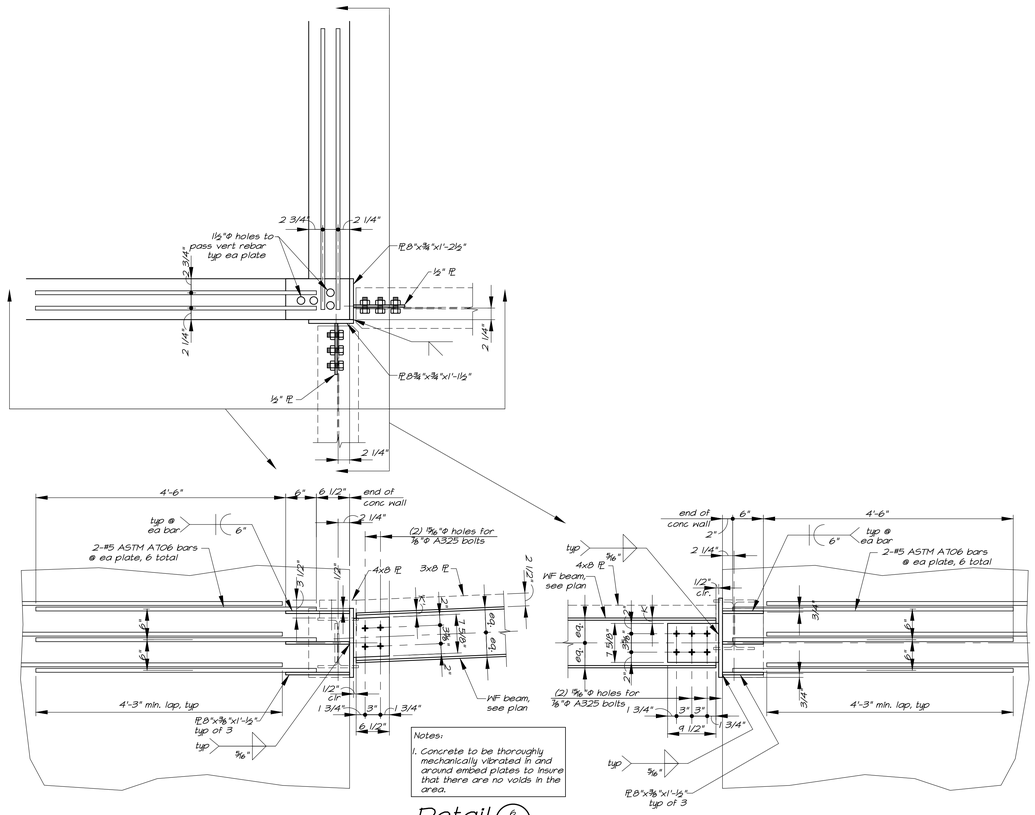

Detail 6/56.9 1"=1'-0"

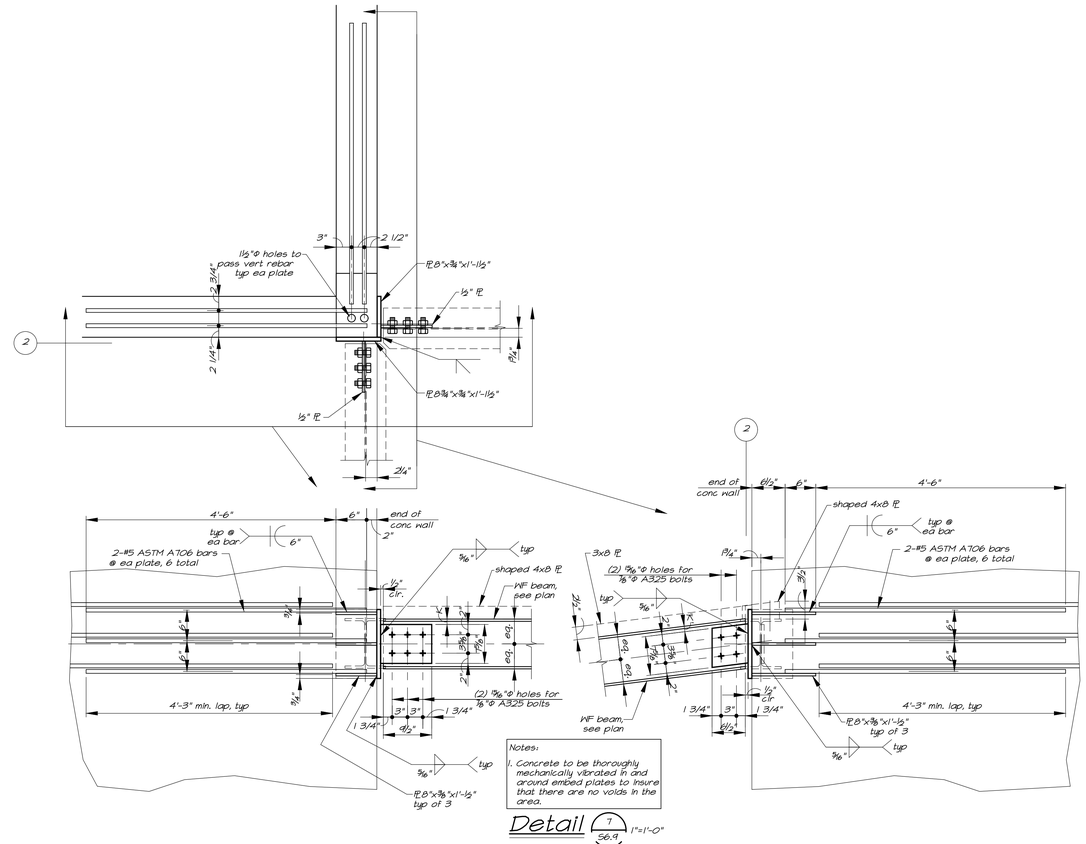

Detail 7/56.9 1"=1'-0"

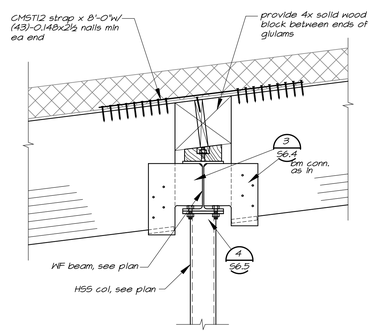

Detail 4/56.9 1"=1'-0"

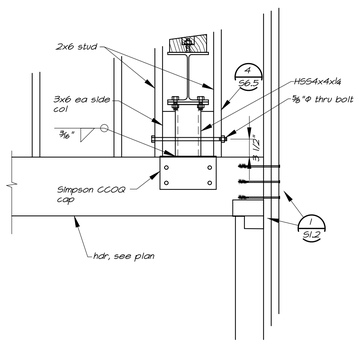

Detail 5/56.9 1"=1'-0"

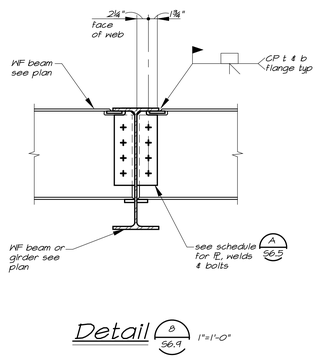

Detail 8/56.9 1"=1'-0"

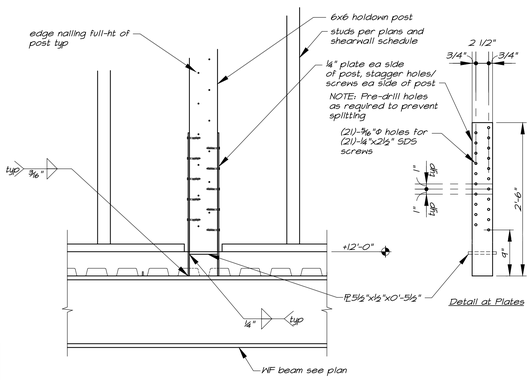

Detail 1/56.9 1"=1'-0"

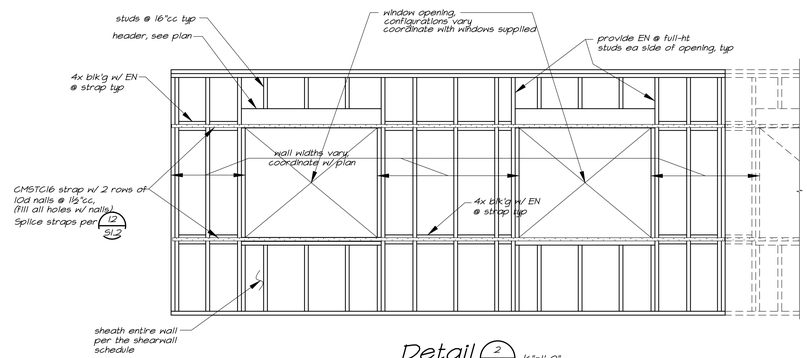

Detail 2/56.9 ½"=1'-0"

Shearwall w/ Windows Elevation

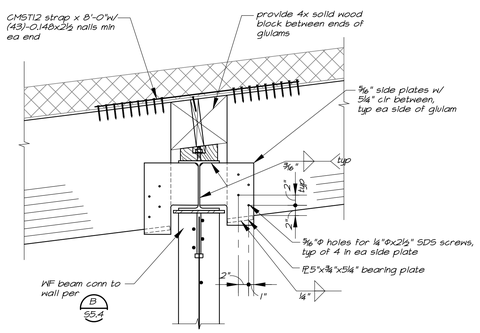

Detail 3/56.9 1"=1'-0"

PBK

ARCHITECT PBK Architects, Inc.
PBK.com
SAN LUIS OBISPO
1327 Archer Street, Suite 110
San Luis Obispo, CA 93401
805-529-3076

CONSULTANT
MLA
STRUCTURAL ENGINEERS INC
1132 Suncast Lane, Suite 6
El Dorado Hills, CA 95762
phone: (916) 941-2425
fax: (916) 941-2429

FIRE STATION #44
COASTSIDE FIRE PROTECTION DISTRICT

501 STETSON STREET
MOSS BEACH, CA 94038
PLANNING SUBMITTAL

COASTSIDE FIRE PROTECTION DISTRICT EST. 2008

BID SET

KEY PLAN
PLAN NORTH
TRUE NORTH

STAMP
REGISTERED PROFESSIONAL ENGINEER
JOHN M. MANDSAGER
No.3824
Exp.09/30/26
STRUCTURAL
STATE OF CALIFORNIA

CLIENT
COASTSIDE FIRE PROTECTION DISTRICT
PROJECT NUMBER
230137
DATE 12/05/25
DRAWN BY: GSL CHKED BY: JMM

REVISIONS

#	DESCRIPTION	DATE

DETAILS

This document is for plan review only

S6.9

Notes:

1. Concrete to be thoroughly mechanically vibrated in and around embed plates to insure that there are no voids in the area.

Plan Detail 1/56.10 1"=1'-0"

Plan Detail 2/56.10 1"=1'-0"

Detail 3/56.10 1"=1'-0"

PBK

ARCHITECT PBK Architects, Inc.
PBK.com
SAN LUIS OBISPO
1327 Archer Street, Suite 110
San Luis Obispo, CA 93401
805-529-3076

CONSULTANT
MLA
STRUCTURAL ENGINEERS INC
1132 Suncast Lane, Suite 6
El Dorado Hills, CA 95762
phone: (916) 941-2425
fax: (916) 941-2429

FIRE STATION #44
COASTSIDE FIRE PROTECTION DISTRICT

501 STETSON STREET
MOSS BEACH, CA 94038
PLANNING SUBMITTAL

BID SET

KEY PLAN

PLAN NORTH TRUE NORTH

STAMP
REGISTERED PROFESSIONAL ENGINEER
JOHN M. MANDSAGER
No.3824
Exp.09/30/26
STRUCTURAL
STATE OF CALIFORNIA

CLIENT
COASTSIDE FIRE PROTECTION DISTRICT
PROJECT NUMBER
230137
DATE 12/05/25
DRAWN BY: GSL CHKED BY: JMM

REVISIONS

#	DESCRIPTION	DATE

This document is for plan review only

DETAILS

S6.10

AIR DISTRIBUTION SCHEDULE

SYM.	MANUF & MODEL	NECK SIZE	FACE SIZE	CFM RANGE	MAX. NECK VELOCITY	MAX. N.C.	T. P. DROP	TYPE	DAMPER	REMARKS
– SD–1	PRICE PDMC	6"Ø 8"Ø 10"Ø 12"Ø 14"Ø 16"Ø 18"Ø	24"x24"	0 - 80 85 - 175 180 - 275 280 - 390 395 - 480 485 - 600 605 - 780	500	25	0.075	MODULAR PERFOR.	MVD	FRAME TYPE 3 FOR T-BAR
– RG–1	PRICE PDDR	6"Ø 8"Ø 10"Ø 12"Ø 14"Ø 16"Ø 18"Ø	24"x24"	0 - 80 85 - 175 180 - 275 280 - 390 395 - 480 485 - 600 605 - 780	500	25	0.016	PERFOR.	MVD	FRAME TYPE 3 FOR T-BAR
– SD–2	PRICE SMCD	6"x6" 8"x8" 10"x10" 12"x12" 14"x14" 16"x16" 18"x18" 20"x20"	12"x12" 14"x14" 16"x16" 18"x18" 20"x20" 22"x22" 24"x24" 26"x26"	0 - 125 130 - 220 225 - 350 355 - 590 505 - 680 685 - 880 885 - 1125 1130 - 1400	500	25	.057	MODULAR CORE	MVD	BORDER TYPE 1 FOR GYP. BOARD CEILING PROVIDE SQUARE TO ROUND ADAPTER FOR ALL
– RG–2	PRICE 530L	6"x6" 8"x8" 10"x10" 12"x12" 14"x14" 16"x16" 18"x18" 20"x20" 22"x20"	8"x8" 10"x10" 12"x12" 14"x14" 16"x16" 18"x18" 20"x20" 24"x22"	0 - 90 95 - 195 200 - 300 305 - 450 455 - 590 595 - 800 805 - 1040 1045 - 1400	500	25	.067	LOUVERED	MVD	BORDER TYPE N FOR GYP. BOARD CEILING
– EG–1	PRICE PDDR	6"Ø 8"Ø 10"Ø 12"Ø 14"Ø 16"Ø 18"Ø	24"x24"	0 - 80 85 - 175 180 - 275 280 - 390 395 - 480 485 - 600 605 - 780	500	25	0.016	PERFOR.	MVD	FRAME TYPE 3 FOR T-BAR
– EG–2	PRICE 530L	6"x6" 8"x8" 10"x10" 12"x12" 14"x14" 16"x16" 22"x20"	8"x8" 10"x10" 12"x12" 14"x14" 16"x16" 18"x18" 24"x22"	0 - 90 95 - 195 200 - 300 305 - 450 455 - 590 595 - 800 1045 - 1400	500	25	.067	LOUVERED	MVD	BORDER TYPE N FOR SURFACE MOUNT
– LD–1	PRICE SDS75	8"Ø	3-1/2"x48"	0 - 160	500	25	0.086	LINEAR	MVD	2-SLOT X 48" LENGTH PROVIDE W/ SDB PLENUM BORDER TYPE 2 FOR HARD-LID CEILING
– LD–2	PRICE SDS75	10"Ø	6"x48"	0 - 400	500	30	.139	LINEAR	MVD	4-SLOT X 48" LENGTH PROVIDE W/ SDB PLENUM BORDER TYPE 19 FOR LAY-IN T-BAR

LEGEND

– CFM
– AIR DISTRIBUTION DEVICE

SD	SUPPLY DIFFUSER
SR	SUPPLY REGISTER
RG	RETURN GRILLE
EG	EXHAUST GRILLE
TG	TRANSFER GRILLE

NOTES:
1. NOT ALL DIFFUSER/GRILLE TYPES OR SIZES MAY BE USED ON THIS PROJECT.

CALIFORNIA GREEN BUILDING STANDARDS NOTES

ENTIRE INSTALLATION SHALL COMPLY WITH THE 2022 CALIFORNIA GREEN BUILDING STANDARDS (CALGREEN) CODE INCLUDING THE FOLLOWING APPLICABLE MANDATORY MEASURES:

1. 5.504.1.3 – PERMANENT HVAC SYSTEM SHALL ONLY BE USED DURING CONSTRUCTION IF NECESSARY TO CONDITION THE BUILDING WITHIN THE REQUIRED TEMPERATURE RANGE FOR MATERIAL AND EQUIPMENT INSTALLATION. IF THE HVAC SYSTEM IS USED DURING CONSTRUCTION, CONTRACTOR SHALL USE MERV 8 MINIMUM RETURN AIR FILTERS. REPLACE ALL FILTERS IMMEDIATELY PRIOR TO OCCUPANCY.
2. 5.504.3 – CONTRACTOR SHALL COVER ALL DUCT AND OTHER RELATED AIR DISTRIBUTION COMPONENT OPENINGS WITH TAPE, PLASTIC, SHEET METAL OR OTHER METHODS ACCEPTABLE TO THE ENFORCING AGENCY DURING STORAGE AND CONSTRUCTION AND UNTIL FINAL STARTUP.
3. 5.504.5.3 – MERV 13 FILTERS ARE REQUIRED FOR HVAC SYSTEMS SERVING REGULARLY OCCUPIED AREAS AND AS INDICATED IN THESE PLANS.
4. 5.504.7 – OUTDOOR SMOKING AREAS SHALL BE MINIMUM 25'–0" FROM ALL BUILDING ENTRIES, OUTDOOR AIR INTAKES, AND OPERABLE WINDOWS.
5. 5.505.1 – INSTALLATION SHALL COMPLY WITH CBC SECTION 1203 AND CHAPTER 14 FOR INDOOR MOISTURE CONTROL.
6. 5.506.2 – DEMAND CONTROL VENTILATION REQUIRED FOR ALL DENSELY OCCUPIED SPACES PER 2022 CALIFORNIA ENERGY CODE REQUIREMENTS.
7. 5.508.1 – HVAC, REFRIGERATION, AND FIRE SUPPRESSION EQUIPMENT SHALL NOT CONTAIN CFCS OR HALONS.

LEGEND

SYMBOL	ABBR.	DESCRIPTION
	–	SUPPLY AIR RISER
	–	RETURN AIR RISER
	–	EXHAUST AIR RISER
	SAG	SUPPLY AIR GRILLE
	RAG	RETURN AIR GRILLE
	EAG	EXHAUST AIR GRILLE
	SWR	SIDEWALL REGISTER
	(L)	LINED DUCTWORK
	–	FLEXIBLE CONNECTION
	FC	FLEXIBLE CONNECTION
	–	DEMO DUCT (SEE PLAN)
	MVD	MANUAL VOLUME DAMPER
	BDD	BACKDRAFT DAMPER
S/M	SFD	SMOKE / FIRE DAMPER
F	FD	FIRE DAMPER
	DL	DOOR LOUVER
U.C.	UC	UNDERCUT DOOR 3/4"
RS	RS	REFRIGERANT SUCTION LINE
RL	RL	REFRIGERANT LIQUID LINE
CD	CD	CONDENSATE DRAIN
	S.D.	SMOKE DETECTOR
	P.O.C.	POINT OF CONNECTION
T	T–STAT	THERMOSTAT
H	H	HUMIDISTAT
TS	TS	TEMPERATURE SENSOR
OS	OS	OVERRIDE SWITCH
PD	PD	PRESSURE DIFFERENTIAL SWITCH
S	S	SWITCH
	O.C.	ON CENTER
	I.D.	INSIDE DIAMETER
	O.D.	OUTSIDE DIAMETER
	W/	WITH
	S/M	SHEET METAL
	S/S	STAINLESS STEEL
	G.C.	GENERAL CONTRACTOR
	VTR	VENT THRU ROOF
	OBD	OPPOSED BLADE DAMPER
	FSC	FAN SPEED CONTROL
E	E	ITEMS FURNISHED AND INSTALLED BY ELECTRICAL CONTRACTOR AS SPECIFIED ON THE ELECTRICAL CONTRACT DOCUMENTS
M	M	ITEMS FURNISHED AND INSTALLED BY MECHANICAL CONTRACTOR AS SPECIFIED ON THE MECHANICAL CONTRACT DOCUMENTS
EM	EM	ITEMS FURNISHED BY ELECTRICAL CONTRACTOR AND INSTALLED BY MECHANICAL CONTRACTOR.
ME	ME	ITEMS FURNISHED BY MECHANICAL CONTRACTOR AND INSTALLED BY ELECTRICAL CONTRACTOR.
	CBD	COUNTER–BALANCE DAMPER
	D.S.	FAN SPEED CONTROL
DS	FSC	DOOR SWITCH

GENERAL NOTES

1. ENTIRE INSTALLATION SHALL CONFORM TO THE REQUIREMENTS OF THE 2022 CALIFORNIA MECHANICAL CODE, 2022 CALIFORNIA BUILDING CODE, AND ALL OTHER APPLICABLE CODES AND REGULATIONS, INCLUDING 2022 CALIFORNIA ENERGY CONSERVATION STANDARDS DIVISION T-24.
2. COORDINATE ENTIRE INSTALLATION OF THE HVAC SYSTEM WITH THE WORK OF ALL OTHER TRADES PRIOR TO ANY FABRICATION OR INSTALLATION. PROVIDE ALL FITTINGS, OFFSETS, AND TRANSITIONS AS REQUIRED FOR A COMPLETE WORKABLE INSTALLATION. THE MECHANICAL CONTRACTOR SHALL BE RESPONSIBLE TO COORDINATE ITEMS TO BE PROVIDED BY OTHER TRADES WHERE MENTIONED IN THE CONTRACT DOCUMENTS PRIOR TO BID - NO EXCEPTIONS.
3. COORDINATE THE LOCATIONS OF ALL CEILING DIFFUSERS, REGISTERS, AND GRILLES WITH THE ARCHITECTURAL REFLECTIVE CEILING PLAN, ELECTRICAL LIGHTING LAYOUT AND ARCHITECTURAL ROOM ELEVATIONS. THE ARCHITECT AND ENGINEER SHALL BE IMMEDIATELY NOTIFIED OF ANY CONFLICTS PRIOR TO FABRICATION AND INSTALLATION.
4. ALL EQUIPMENT, DUCTS, PIPING, AND OTHER DEVICES AND MATERIALS INSTALLED OUTSIDE OF THE BUILDING OR OTHERWISE EXPOSED TO THE WEATHER SHALL BE COMPLETELY WEATHER-PROOFED AND PAINTED TO MATCH, COORDINATE WITH ARCHITECT PRIOR TO PAINTING.
5. THESE DRAWINGS SHALL BE READ IN CONJUNCTION WITH AND BE CONSIDERED TO BE PART OF A SEPARATE AND COMPLETE MECHANICAL SPECIFICATION.
6. ALL DIMENSIONS SHOWN ON THESE PLANS ARE APPROXIMATE AND MUST BE CONFIRMED ON SITE.
7. PRIOR TO OCCUPANCY, THE ENTIRE H.V.A.C. SYSTEMS SHALL BE BALANCED IN ACCORDANCE WITH (AABC) ASSOCIATED AIR BALANCE COUNCIL STANDARDS BY AN INDEPENDANT AIR BALANCE CONTRACTOR. CERTIFICATION SHALL BE PROVIDED BY THE CONTRACTOR FOR AIR AND HYDRONIC AS APPLICABLE. SYSTEMS SHALL BE BALANCED AS INDICATED ON PLANS INCLUDING FRESH AIR VENTILATION. WHERE THERE IS A CONFLICT WITH THE MECHANICAL PLANS, THE AIR BALANCE CONTRACTOR SHALL NOTIFY THE ENGINEER PRIOR TO BALANCING OF SYSTEM. IF NOT THE AIR BALANCE CONTRACTOR SHALL BEAR ALL COSTS INCURRED FOR WORK THAT MUST BE RE-BALANCED DUE TO CONFLICTS ON CONTRACT DOCUMENTS. CONTRACTOR SHALL PROVIDE THREE COPIES OF THE AIR BALANCE REPORT TO THE ENGINEER FOR APPROVAL.
8. FOR INACCESSIBLE AREAS THE CONTRACTOR SHALL PROVIDE ACCESS PANELS FOR ALL DAMPERS, EQUIPMENT, SMOKE DETECTORS, AND CONTROL DEVICES. THESE PANELS SHALL MATCH THE RATING OF THE WALL AND/OR CEILING THAT THEY ARE LOCATED IN. MINIMUM ACCESS PANEL SIZES SHALL BE AS FOLLOWS:

   1) HAND ACCESS: 12"x12"

   2) BODY ACCESS: 30"x30" MIN. WHERE A LARGER ACCESS SIZE IS REQUIRED DUE TO INSTALLATION CONSTRAINTS, THE CONTRACTOR SHALL DO SO AT NO ADDITIONAL COST AND SHALL NOTIFY THE ARCHITECT AND ENGINEER OF DEVIATIONS PRIOR TO INSTALLATION.
9. COORDINATE THE LOCATION OF ALL ROOF OPENINGS AND THE LOCATION OF ALL ROOF MOUNTED EQUIPMENT WITH THE STRUCTURAL AND ARCHITECTURAL PLANS PRIOR TO ANY INSTALLATION.
10. PLATFORMS, CURBS, AND FLASHINGS FOR MECHANICAL EQUIPMENT SHALL BE AS INDICATED ON THE STRUCTURAL AND ARCHITECTURAL PLANS, UNLESS NOTED OTHERWISE. WHERE THERE IS A CONFLICT WITH THE MECHANICAL PLANS, THE CONTRACTOR SHALL NOTIFY THE ARCHITECT AND ENGINEER PRIOR TO FABRICATION AND INSTALLTION.
11. ALL EQUIPMENT, ACCESSORIES, AND RELATED PIPING SHALL BE INSTALLED IN STRICT ACCORDANCE WITH THE EQUIPMENT MANUFACTURER'S RECOMMENDATIONS. PROVIDE ALL FITTINGS, TRANSITIONS, DAMPERS, VALVES, AND OTHER DEVICES REQUIRED FOR A COMPLETE WORKABLE INSTALLATION.
12. MAINTENANCE LABEL SHALL BE AFFIXED TO ALL MECHANICAL EQUIPMENT AND A MAINTENANCE MANUAL SHALL BE PROVIDED FOR THE OWNER'S USE.
13. PROVIDE MERV 13 FILTERS FOR ALL AIR CONDITIONING UNITS. SEE EQUIPMENT SCHEDULE AND SPECIFICATIONS FOR TYPE. SIZES SHALL BE AS RECOMMENDED BY THE MANUFACTURER, UNLESS OTHERWISE SPECIFIED.
14. AIR FILTERS SHALL BE STATE FIRE MARSHALL APPROVED AND LISTED. PREFORMED FILTERS HAVING COMBUSTIBLE FRAMING SHALL BE TESTED AS A COMPLETE ASSEMBLY. AIR FILTERS SHALL BE ACCESSIBLE FOR CLEANING OR REPLACEMENT.
15. ALL EQUIPMENT WITH MOVING PARTS SHALL BE PROVIDED WITH FLEXIBLE DUCT AND PIPE CONNECTIONS.
16. ALL EQUIPMENT SHALL BE LABELED AS TO THE SPACE IT SERVES. SEE PLANS AND SPECIFICATIONS FOR IDENTIFICATION STANDARDS.
17. ALL HVAC EQUIPMENT SHALL BE CERTIFIED BY THE CALIFORNIA ENERGY COMMISSION TO COMPLY WITH LATEST EFFICIENCY STANDARDS.
18. AC UNITS PROVIDED WITH ECONOMY CYCLE DAMPERS SHALL HAVE DAMPERS SET UP TO CLOSE AUTOMATICALLY ON FAN SHUTDOWN.
19. PROVIDE MANUAL VOLUME DAMPERS AND BACKDRAFT DAMPERS FOR FRESH AIR INTAKES ON ALL AIR HANDLING EQUIPMENT AND EXHAUST FANS SERVING CONDITIONED SPACES. EXCEPTION: EQUIPMENT WITH FACTORY ECONOMIZERS.
20. ALL FRESH AIR INTAKES SHALL MEET CODE REQUIRED CLEARANCES FROM EXHAUST, FLUE, FUEL BURNING APPLIANCE AND PLUMBING VENT OUTLETS. FOR GAS/ELECTRIC AIR CONDITIONING UNITS WHERE THE CODE REQUIRED CLEARANCES ARE NOT MET, A FACTORY FLUE GAS DEFLECTOR AND EXTENSION SHALL BE USED TO MINIMIZE THESE CLEARANCES. CONTRACTOR SHALL DETERMINE LOCATIONS WHERE REQUIRED PRIOR TO BID. THIS SHALL BE PROVIDED AT NO ADDITIONAL COST.
21. ALL AIR HANDLING EQUIPMENT SERVING CONDITIONED SPACES SHALL PROVIDE CONTINUOUS FRESH AIR TO SPACES IN OCCUPIED MODE.
22. CONTRACTOR SHALL VERIFY ALL CLEARANCES AND AVAILIABLE SPACE FOR DUCTWORK PRIOR TO ORDERING AND/OR FABRICATING MATERIAL.
23. CONTRACTOR TO SUBMIT ALL EQUIPMENT, DUCTWORK, AIR DISTRIBUTION DEVICES, AND OTHER ACCESSORIES TO THE ENGINEER FOR APPROVAL PRIOR TO ANY ORDERING OF SUCH ITEMS.
24. CONTRACTOR SHALL PROVIDE SHOP DRAWINGS WITHIN 45 DAYS OF AWARD OF CONTRACT. SEE 230000 SPECIFICATIONS FOR REQUIREMENTS. ALL CONFLICTS BETWEEN VARIOUS TRADE SHOP DRAWINGS SHALL BE REPORTED TO THE CITY, ARCHITECT, AND ENGINEER OF RECORD. FAILURE TO REPORT CONFLICTS SHALL RESULT IN REJECTION OF RELATED CLAIMS FOR REWORK, EXTRA WORK, AND TIME FOR EXTENSIONS.
25. CONTRACTOR SHALL BE RESPONSIBLE FOR COMMISSIONING OF EQUIPMENT AS STIPULATED ON MECH-1-C FORM ON PLANS UNLESS NOTED OTHERWISE.
26. CONTROL SCHEMATICS ARE FOR SEQUENCE ONLY. REFER TO ELECTRICAL DRAWINGS AND SPECIFICATIONS FOR ALL ELECTRICAL DEVICES REQUIRED.
27. ALL LINE VOLTAGE WIRING SHALL BE INSTALLED IN CONDUIT. ALL LINE VOLTAGE CONDUIT AND WIRING, INCLUDING FINAL CONNECTIONS, SHALL BE FURNISHED AND INSTALLED BY THE ELECTRICAL CONTRACTOR AS INDICATED ON THE ELECTRICAL DRAWINGS OR SPECIFIED IN THE ELECTRICAL SECTION OF THE SPECIFICATIONS. ALL ELECTRICAL WORK SHALL BE INSTALLED IN ACCORDANCE WITH ALL APPLICABLE CODES AND REGULATIONS OF ALL GOVERNING BODIES HAVING JURISDICTION THEREOF.
28. ALL LOW VOLTAGE CONDUIT AND WIRING AS APPLICABLE, INCLUDING FINAL CONNECTIONS, SHALL BE FURNISHED AND INSTALLED BY THE MECHANICAL CONTRACTOR AS INDICATED ON THE MECHANICAL DRAWINGS OR SPECIFIED IN THE MECHANICAL SECTION OF THE SPECIFICATIONS.

   A) ALL LOW VOLTAGE WIRING SHALL BE INSTALLED IN CONDUIT.

   B) WHERE THE CONTROLS CONTRACTOR IS RETAINED BY THE OWNER, THEY SHALL BE RESPONSIBLE FOR THE FOLLOWING:

   1) FURNISH AND INSTALL ALL DEVICES, WIRING, AND TERMINATIONS REQUIRED FOR A COMPLETE AND FUNCTIONAL INSTALLATION.

   2) COORDINATE ALL WORK AND REQUIREMENTS WITH OTHER TRADES INCLUDING GENERAL, MECHANICAL, AND ELECTRICAL CONTRACTORS PRIOR TO BID.

   3) CONTRACTOR SHALL FOLLOW ALL SUBMITTAL REQUIREMENTS PER DRAWINGS AND SPECIFICATIONS.
29. CONTRACTOR SHALL BE RESPONSIBLE FOR ORDERING AIR CONDITIONING EQUIPMENT WITH THRU-THE-BASE POWER, CONTROL, AND GAS CONNECTIONS. VERIFY ALL CONNECTION LOCATIONS WITH UNIT MANUFACTURER AND COORDINATE WITH OTHER TRADES AS NECESSARY.
30. ELECTRICAL CONTRACTOR SHALL PROVIDE REQUIRED RELAY ACCESSORIES FOR CONNECTION OF 120 VOLT 1 PHASE VENTILATION EQUIPMENT TO 277 VOLT 1 PHASE LIGHTING AS APPLICABLE. MECHANICAL CONTRACTOR SHALL BE RESPONSIBLE FOR SUCH COORDINATION PRIOR TO BID.
31. WHERE HVAC CONTROL WIRING IS REQUIRED BETWEEN BUILDINGS, PROVIDE UNDERGROUND CONDUIT WITH PULL STRING(S) FURNISHED AND INSTALLED BY ELECTRICAL FOR THE ENERGY MANAGEMENT SYSTEM WIRING TERMINATIONS ONLY. CONTRACTOR SHALL FURNISH AND INSTALL CONDUIT AND WIRING TERMINATIONS FOR BETWEEN BUILDINGS.
32. ALL THERMOSTATS SHALL HAVE LOCKABLE COVERS (WHERE INDICATED ON PLANS) AND SHALL BE OF THE ELECTRONIC, PROGRAMMABLE, AUTOMATIC CHANGEOVER TYPE TO SEQUENCE HEATING OR COOLING. SET POINT RANGE SHALL BE 10 DEGREES F. BETWEEN FULL HEATING AND COOLING. THEY SHALL HAVE CAPABILITY OF TERMINATING ALL HEATING AT A TEMPERATURE NO MORE THAN 70 DEGREES F., AND COOLING AT A TEMPERATURE NOT LESS THAN 78 DEGREES F. ADJUSTABLE TEMPERATURE DIFFERENTIAL SHALL BE 1- 1/2 DEGREES F. CONTROL LIMITS SHALL BE FROM 55 DEGREES F. TO 85 DEGREES F. MOUNT AT 48 INCHES ABOVE FLOOR OR AS REQUIRED BY LOCAL AUTHORITIES OR ACCESSIBILITY CODES.

   NOTES:
   1) THERMOSTATS THAT ARE PART OF AN ENERGY MANAGEMENT SYSTEM SHALL FOLLOW CONTROL SPECIFICATIONS AND DRAWING REQUIREMENTS.

   2) SHOULD THE LOCATION OF THE THERMOSTAT NOT MEET THE ADA HEIGHT REQUIREMENTS DUE TO OBSTRUCTIONS, THEN AN ALTERNATE LOCATION SHALL BE PROPOSED OR REQUESTED BY THE CONTRACTOR THAT SHALL BE APPROVED BY THE ENGINEER AND ARCHITECT.
33. LINE VOLTAGE THERMOSTATS SHALL BE FURNISHED BY THE MECHANICAL CONTRACTOR AND INSTALLED BY THE ELECTRICAL CONTRACTOR.
34. CONTROLS CONTRACTOR AND AIR BALANCE CONTRACTOR SHALL COORDINATE WORK AND PERFORM NECESSARY TASKS AS REQUIRED TO OBTAIN AIR AND WATER FLOW QUANTITIES FOR SYSTEMS SHOWN HEREIN.
35. CONTROLS SHALL BE PROVIDED TO PROVIDE THE MINIMUM RATE OF OUTDOOR AIR REQUIRED BY THE STATE ENERGY REGULATIONS.
36. ALL DUCTWORK SHALL BE SHEET METAL CONSTRUCTED OR SPIRAL, ERECTED, AND TESTED IN ACCORDANCE WITH THE MOST RESTRICTIVE OF LOCAL REGULATIONS, PROCEDURES DETAILED IN THE ASHRAE HANDBOOK OF FUNDAMENTALS, CHAPTER 6 OF THE MECHANICAL CODE, OR THE APPLICABLE STANDARDS ADOPTED BY THE SHEET METAL AND AIR CONDITIONING CONTRACTORS NATIONAL ASSOCIATION.
37. ALL FLEXIBLE DUCTWORK SHALL BE MAX FIVE FEET AND MIN 3 FEET IN LENGTH TO RESPECTIVE DIFFUSERS, GRILLES, AND REGISTERS, OR OTHER AIR DEVICES.
38. PROVIDE SEISMIC RESTRAINTS TO ALL DUCTWORK, PIPE, AND EQUIPMENT SUPPORTS IN ACCORDANCE WITH THE LATEST SMACNA GUIDELINES FOR SEISMIC RESTRAINT OF MECHANICAL SYSTEMS. SUSPENDED EQUIPMENT SHALL BE PROVIDED WITH SEISMIC ANCHORAGE AND ISOLATION SUPPORTS. SEE SEISMIC NOTES ON THIS SHEET FOR ADDITIONAL REQUIREMENTS.
39. ALL RECTANGULAR DUCT TURNS IN SUPPLY, RETURN, AND EXHAUST DUCTS SHALL HAVE TURNING VANES UNLESS OTHERWISE NOTED.
40. DUCTWORK HANDLING CONDITIONED AIR SHALL BE INSULATED OR LINED AS INDICATED ON DRAWINGS. SUPPLY AND RETURN DUCT INSULATION SHALL BE MIN. 1.5" THICK, 3/4 LB./CUBIC FT. DENSITY AND HAVE A MIN. VALUE OF R-8 WHERE LOCATED IN ONE OR MORE OF THE FOLLOWING SPACES:

   A) OUTDOORS, OR

   B) IN A SPACE BETWEEN THE ROOF AND AN INSULATED CEILING, OR

   C) IN A SPACE DIRECTLY UNDER A ROOF WITH FIXED VENTS OR OPENINGS TO THE OUTSIDE OR UNCONDITIONED SPACES, OR

   D) IN AN UNCONDITIONED CRAWLSPACE; OR

   E) IN OTHER UNCONDITIONED SPACES

   PER 2022 CEC, OTHERWISE PROVIDE R-4.2 WHEN LOCATED IN CONDITIONED ATTIC SPACES ABOVE CEILINGS. ALL DUCTWORK EXPOSED ON ROOF SHALL BE INTERNALLY LINED WITH 1.5" THICK, 1.5LB./CUBIC FT. DENSITY DUCT LINER UNLESS OTHERWISE INDICATED OR SPECIFIED. ALL DUCT SIZES ARE SHEET METAL SIZES. ALL DUCT JOINTS SHALL BE SEALED PER CHAPTER 6 MECHANICAL CODE REQUIREMENTS. PROVIDE PIPING AND DUCT INSULATION IN ACCORDANCE WITH THE LATEST STANDARDS OF THE CALIFORNIA ENERGY COMMISSION.

   ALL INSULATION SHALL HAVE A FLAME SPREAD OF NOT MORE THAN 25 AND A SMOKE DENSITY NOT EXCEEDING 50.

   MANUAL VOLUME DAMPERS SHALL BE PROVIDED IN ALL DUCT BRANCHES TO INDIVIDUAL DIFFUSERS, GRILLES, AND REGISTERS, AS WELL AS FRESH AIR INTAKE DUCTS. DAMPERS SHALL BE LOCATED AT THE BRANCH DUCT LOCATIONS. THE MECHANICAL CONTRACTOR SHALL COORDINATE LOCATIONS OF DAMPERS WITH THE AIR BALANCE CONTRACTOR PRIOR TO BID, SO THEY ARE ACCESSIBLE PRIOR TO INSTALLATION. IN LOCATIONS WHERE THESE DAMPERS ARE INACCESSIBLE, CABLE OPERATED ADJUSTMENT CONTROLS SHALL BE PROVIDED AT NO ADDITIONAL COST. SEE DETAIL 1/M5.1. OPPOSED BLADE DAMPERS SHALL NOT BE PERMITTED UNLESS NOTED OTHERWISE.
43. ALL VOLUME DAMPERS SHALL BE INSTALLED MIN THREE DUCT DIAMETERS UPSTREAM OF REGISTERS.

    AUTOMATIC FIRE DAMPER REQUIREMENTS ARE AS FOLLOWS:

    A) PROVIDE AUTOMATIC FIRE DAMPERS AT ALL PENETRATIONS OF FIRE-RATED CEILINGS AND WALLS THROUGHOUT. CONTRACTOR SHALL COORDINATE FIRE-RATED AREAS WITH THE ARCHITECTURAL DRAWINGS AND OTHER TRADES PRIOR TO INSTALL AND SHALL NOTIFY PERTINENT PARTIES PRIOR TO ANY WORK PERFORMED IN THESE AREAS. IN ADDITION, CONTRACTOR SHALL BE RESPONSIBLE TO PROVIDE PROPER ACCESS FOR DAMPERS INSTALLED. THE DAMPER FIRE RATING SHALL BE COMPATIBLE WITH THE CEILING/WALL RATING.

    B) LOCATION OF FIRE-RATED CEILINGS AND WALLS ARE AS INDICATED ON THE ARCHITECTURAL DRAWINGS.

    C) FIRE AND/OR SMOKE DAMPER(S) SHALL BE PROVIDED AS REQUIRED BY 2022 CBC AND CFC.

    D) CONTRACTOR SHALL FURNISH FLUSH MOUNTED FIRE AND/OR SMOKE DAMPERS, SO THAT DAMPER DO NOT EXTEND PASS WALLS, FOR AREAS WITHOUT CEILINGS FOR QUALITY WORKMENSHIP.
44. ALL DUCTWORK PASSING THROUGH FIRE RATED CORRIDORS AND LOBBIES SHALL BE MIN. 26 GAGE SHEET METAL CONSTRUCTION. FLEXIBLE DUCTWORK SHALL NOT BE ALLOWED.
45. ALL DUCTWORK, PIPING, CONDUIT, & ETC. PENETRATING FIRE RATED CONSTRUCTION SHALL HAVE APPROVED FIRE STOPPING. COORDINATE WITH OTHER TRADES PRIOR TO INSTALLATION.
46. MECHANICAL CONTRACTOR SHALL BE RESPONSIBLE FOR THE PROPER OPERATION OF ALL MECHANICAL EQUIPMENT INCLUDING NECESSARY DEVICES FOR INTERLOCKING OF SUCH EQUIPMENT.
47. CONTRACTOR SHALL REFER TO MECHANICAL AND ARCHITECTURAL PLANS FOR REGISTER, DIFFUSER, AND GRILLE LOCATIONS PRIOR TO INSTALLATION.
48. CONTACT THE ENGINEER IMMEDIATELY IF THERE ARE CONFLICTS PRIOR TO INSTALLATION. CONTRACTOR SHALL COORDINATE ALL LOCATIONS OF DUCT PENETRATIONS THROUGH SHEAR WALLS. NO DUCT PENETRATE SHEAR WALLS UNLESS SPECIFICALLY SHOWN ON STRUCTURAL PLANS.
49. CONTRACTOR SHALL REFER TO STRUCTURAL, MECHANICAL, AND ARCHITECTURAL PLANS FOR EXTERIOR LOUVER LOCATIONS PRIOR TO FABRICATION AND INSTALLATION. CONTACT THE ENGINEER IMMEDIATELY IF THERE ARE CONFLICTS. REFER TO ARCHITECTURAL EXTERIOR ELEVATION PLANS FOR MOUNTING HEIGHTS. IF MOUNTING HEIGHTS ARE NOT IDENTIFIED ON THE ARCHITECTURAL PLANS. THEN THE CONTRACTOR SHALL RECEIVE FINAL APPROVAL FROM THE ARCHITECT PRIOR TO FABRICATION AND INSTALLATION.
50. CONTRACTOR SHALL COORDINATE ALL DOOR UNDERCUT QUANTITIES AND LOCATIONS WITH THE APPROPRIATE TRADES PRIOR TO FINAL BID. CONTACT THE ARCHITECT IMMEDIATELY IF THERE ARE CONFLICTS.
51. ALL DOOR UNDERCUTS INDICATED ON FLOOR PLAN(S) SHALL BE 3/4" MIN. ABOVE THRESHOLD.
52. CONTRACTOR SHALL IDENTIFY ALL CEILING ACCESS DOORS FOR MANUAL AND REMOTE CONTROLLED (CABLE OPERATED) DAMPERS, CEILING CUP LOCATIONS FOR INACCESSIBLE AREAS FOR THE ARCHITECT'S REVIEW AND APPROVAL PRIOR TO FABRICATION AND INSTALLATION OF DUCTWORK, EQUIPMENT, ETC.
53. CONTRACTOR SHALL CONFIRM FINAL REFRIGERANT PIPE SIZING UPON DETERMINATION OF ACTUAL DEVELOPED LENGTH. ALL PIPE MATERIALS SHALL BE PER MANUFACTURER'S GUIDELINES.
54. FOR INACCESSIBLE AREAS THE CONTRACTOR SHALL PROVIDE ACCESS PANELS FOR ALL DAMPERS, EQUIPMENT, SMOKE DETECTORS, AND CONTROL DEVICES. THESE PANELS SHALL MATCH THE RATING OF THE WALL AND/OR CEILING WHERE THEY ARE LOCATED IN. MINIMUM ACCESS PANEL SIZES SHALL BE AS FOLLOWS:

    1) HAND ACCESS: 12"x12" MIN.
    2) BODY ACCESS: 30"x30" MIN.
    3) MANUAL REMOTE CONTROL (CABLE OPERATED) DAMPERS IN LIEU OF VOLUME DAMPERS. SEE DETAIL...
55. WHERE A LARGER ACCESS SIZE IS REQUIRED DUE TO INSTALLATION CONSTRAINTS, THE CONTRACTOR SHALL DO SO AT NO ADDITIONAL COST AND SHALL NOTIFY THE ARCHITECT AND ENGINEER OF DEVIATIONS PRIOR TO INSTALLATION.
56. CONTRACTOR SHALL COORDINATE ALL MOUNTING HEIGHTS ABOVE FINISHED FLOOR WITH OTHER TRADES AND RECEIVE FINAL APPROVAL FROM THE ARCHITECT PRIOR TO FABRICATING AND INSTALLING EXPOSED DUCTWORK, EQUIPMENT, REGISTERS, ETC.
57. CONTRACTOR SHALL REFER TO MECHANICAL AND ARCHITECTURAL PLANS FOR ALL SIDE-WALL GRILLE LOCATIONS PRIOR TO FABRICATION AND INSTALLATION. CONTACT THE ENGINEER IMMEDIATELY IF THERE ARE CONFLICTS. REFER TO ARCHITECTURAL INTERIOR ELEVATION PLANS FOR MOUNTING HEIGHTS. IF MOUNTING HEIGHTS ARE NOT IDENTIFIED ON THE ARCHITECTURAL PLANS. THEN THE CONTRACTOR SHALL RECEIVE FINAL APPROVAL FROM THE ARCHITECT PRIOR TO FABRICATION AND INSTALLATION.
58. CONTRACTOR SHALL INSULATE ALL REFRIGERANT PIPING SUCTION AND VAPOR LINES.
59. CONTRACTOR SHALL PAINT ALL EXPOSED DUCTWORK, REGISTERS, ETC. COORDINATE PAINT FINISHES WITH THE ARCHITECT PRIOR TO INSTALLATION.

Not for permitting or construction

PBK
ARCHITECT PBK Architects, Inc.
PBK.com
SAN LUIS OBISPO
1327 Archer Street, Suite 110
San Luis Obispo, CA 93401
805-229-3076

PDS
PocockDesignSolutions Inc.

FIRE STATION #44
COASTSIDE FIRE PROTECTION DISTRICT
501 STETSON STREET
MOSS BEACH, CA 94038
BID SET

COASTSIDE FIRE PROTECTION DISTRICT EST. 2003

BID SET

KEY PLAN
PLAN NORTH
TRUE NORTH

REGISTERED PROFESSIONAL ENGINEER
ANDREW R. GUSMAN
No. M39639
Exp. 12/31/26
MECHANICAL
STATE OF CALIFORNIA

CLIENT	
COASTSIDE FIRE PROTECTION DISTRICT	
PROJECT NUMBER	
230137	
DATE	3/13/2026
DRAWN BY: KF/OS	CHKED BY: AD

REVISIONS

#	DESCRIPTION	DATE

MECHANICAL LEGEND, AND GENERAL NOTES,

M0.1

This document is for plan review only

1/30/2025 4:24:54 PM

SPLIT SYSTEM OUTDOOR CONDENSING UNIT SCHEDULE

SYM	MFR & MODEL #	NOMINAL TONS	REFRIG.	COOLING					INDOOR UNIT	ELECTRICAL				WEIGHT (LBS)	REMARKS	WIRING DETAIL	ANCHORAGE DETAIL
				TOTAL CAPACITY (BTU/h)	SENSIBLE CAPACITY (BTU/h)	SEER	EER	AMBIENT (°F DB)		V	PH	MCA	MOCP				
SCU 1	LG LSU240HFV3	2.0	R-410A	24,000	18,000	17.0	10.0	95	SFC 1	208	1	15	20	150	1	5 M5.2	11 M5.1
SCU 2	LG LSU240HFV3	2.0	R-410A	24,000	18,000	17.0	10.0	95	SFC 2	208	1	15	20	150	1	5 M5.2	11 M5.1

1. PROVIDE WITH PROGRAMMABLE THERMOSTAT, LOW TEMP KIT, AND NEOPRENE PADS.

SPLIT SYSTEM INDOOR WALL MOUNTED FAN COIL UNIT SCHEDULE

SYM	MFR & MODEL #	AREA SERVICED	NOMINAL TONS	CFM	FAN POWER (WATT)	FILTER EFFICIENCY	OUTDOOR UNIT	ELECTRICAL				WEIGHT (LBS)	REMARKS	WIRING DETAIL	ANCHORAGE DETAIL
								V	PH	MCA	MOCP				
SFC 1	LG LSN240HFV3	IDF	2.0	600	-	WASHABLE	SCU 1	208	1	POWERED BY OUTDOOR UNIT		40	1	5 M5.2	6 M5.1
SFC 2	LG LSN240HFV3	IDF	2.0	600	-	WASHABLE	SCU 2	208	1			40	1	5 M5.2	6 M5.1

1. PROVIDE WITH CONDENSATE PUMP. POWERED FROM OUTDOOR UNIT

GAS FIRED UNIT HEATER SCHEDULE

SYM	MFR & MODEL #	AREA SERVICED	CFM	MOTOR HP	INPUT (BTU/h)	OUTPUT (BTU/h)	AFUE (%)	FLUE SIZE (IN)	ELECTRICAL				WEIGHT (LBS)	REMARKS	WIRING DETAIL	ANCHORAGE DETAIL
									V	PH	MCA	MOCP				
UH 1	REZNOR UEZ-180	APP BAY	2,458	1/4	175,000	159,250	91	4	115	1	6.3	15	300	1	12 M5.2	11 M5.2
UH 2	REZNOR UEZ-180	APP BAY	2,458	1/4	175,000	159,250	91	4	115	1	6.3	15	300	1	12 M5.2	11 M5.2

1. PROVIDE WITH FACTORY HANGING KIT, AND THERMOSTAT

VRF - HEAT RECOVERY UNIT SCHEDULE

SYM	MFR & MODEL #	NOMINAL TONS	REFRIG.	COOLING					HEATING			ELECTRICAL				WEIGHT (LBS)	REMARKS	PIPING DETAIL	WIRING DETAIL	ANCHORAGE DETAIL
				TOTAL CAPACITY (BTU/h)	SENSIBLE CAPACITY (BTU/h)	SEER	EER	AMBIENT (°F DB)	OUTPUT (BTU/h)	COP	AMBIENT (°F DB)	V	PH	MODULE 1 MCA	MODULE 1 MOCP					
HRU 1	LG ARUM216BTE5	18.0	R-410A	216,000	165,000	17.4	15.0	95	243,000	4.2	47	208	3	60.3	80	750	1	2 M5.3	1 M5.3	2 M5.2
HRU 2	LG ARUM096BTE5	8.0	R-410A	96,000	72,000	17.4	15.0	95	108,000	4.2	47	208	3	28.5	40	600	1	4 M5.3	3 M5.3	2 M5.2

1. PROVIDE WITH LGRED CONTROLS AND NEOPRENE MOUNTING PADS

VRF - FAN COIL UNIT SCHEDULE

SYM	MFR & MODEL #	AREA SERVICED	NOMINAL TONS	CFM	OSA CFM	ESP (IN. WG)	COOLING		HEATING	FILTER EFFICIENCY	OUTDOOR UNIT	ELECTRICAL				WEIGHT (LBS)	REMARKS	WIRING DETAIL	PIPING DETAIL	ANCHORAGE DETAIL
							TOTAL CAP (BTUH)	SENSIBLE CAP (BTUH)	TOTAL CAP (BTUH)			V	PH	MCA	MOCP					
FC 1-1	LG ARNU363M2A4	FITNESS	3.0	1050	150	0.50	36,200	27,100	40,600	MERV 13	HRU 1	208	1	2.90	15	100	1	1 M5.3	2 M5.3	12 M5.1
FC 1-2	LG ARNU073TRD4	OFFICE	0.5	265	20	-	7,500	5,400	8,500	MERV 13	HRU 1	208	1	0.25	15	30	1, 2	1 M5.3	2 M5.3	7 M5.1
FC 1-3	LG ARNU073TRD4	CAPT OFFICE	0.5	265	20	-	7,500	5,400	8,500	MERV 13	HRU 1	208	1	0.25	15	30	1, 2	1 M5.3	2 M5.3	7 M5.1
FC 1-4	LG ARNU073TRD4	LOBBY	0.5	265	20	-	7,500	5,400	8,500	MERV 13	HRU 1	208	1	0.25	15	30	1, 2	1 M5.3	2 M5.3	7 M5.1
FC 1-5	LG ARNU123M1A4	HALLWAY	1.0	400	75	0.50	12,300	9,700	13,600	MERV 13	HRU 1	208	1	2.00	15	95	1	1 M5.3	2 M5.3	12 M5.1
FC 1-6	LG ARNU363M2A4	CLASSROOM	3.0	1050	200	0.50	36,200	27,100	40,600	MERV 13	HRU 1	208	1	2.90	15	100	1	1 M5.3	2 M5.3	12 M5.1
FC 1-7	LG ARNU243TAA4	TURNOUT	2.0	810	50	-	24,300	19,500	25,600	MERV 13	HRU 1	208	1	2.09	15	100	1, 2	1 M5.3	2 M5.3	7 M5.1
FC 2-1	LG ARNU073TRD4	DORM	0.5	265	20	-	7,500	5,400	8,500	MERV 13	HRU 1	208	1	0.25	15	30	1, 2	1 M5.3	2 M5.3	7 M5.1
FC 2-2	LG ARNU073TRD4	DORM	0.5	265	20	-	7,500	5,400	8,500	MERV 13	HRU 1	208	1	0.25	15	30	1, 2	1 M5.3	2 M5.3	7 M5.1
FC 2-3	LG ARNU093TRD4	CAPT DORM	0.75	285	20	-	9,600	6,900	10,900	MERV 13	HRU 1	208	1	0.25	15	40	1, 2	1 M5.3	2 M5.3	7 M5.1
FC 2-4	LG ARNU073TRD4	DORM	0.5	265	20	-	7,500	5,400	8,500	MERV 13	HRU 1	208	1	0.25	15	30	1, 2	1 M5.3	2 M5.3	7 M5.1
FC 2-5	LG ARNU093TRD4	BC DORM	0.75	285	20	-	9,600	6,900	10,900	MERV 13	HRU 1	208	1	0.25	15	40	1, 2	1 M5.3	2 M5.3	7 M5.1
FC 2-6	LG ARNU123M1A4	HALLWAY	1.0	400	75	0.50	12,300	9,700	13,600	MERV 13	HRU 1	208	1	2.00	15	95	1	1 M5.3	2 M5.3	12 M5.1
FC 2-7	LG ARNU483M3A4	DINING / DAYRM	4.0	1,500	175	0.50	48,100	36,100	52,200	MERV 13	HRU 1	208	1	3.10	15	110	1	1 M5.3	2 M5.3	12 M5.1
FC 3-1	LG ARNU483B8Z4	OUTSIDE AIR	4.0	500	500	0.70	20,800	19,000	39,000	MERV 13	HRU 2	208	1	2.70	15	175	1	3 M5.3	4 M5.3	12 M5.1
FC 3-2	LG ARNU483B8Z4	OUTSIDE AIR	4.0	500	500	0.70	20,800	19,000	39,000	MERV 13	HRU 2	208	1	2.70	15	175	1	3 M5.3	4 M5.3	12 M5.1

1. PROVIDE WITH FACTORY FILTER BOX AND MERV 13 FILTERS, LGRED CONTROLS AND PROGRAMMABLE THERMOSTAT, OVERFLOW SHUTOFF, AND CONDENSATE PUMP
2. PROVIDE WITH VENTILATION KIT

VRF - BRANCH SELECTOR UNIT SCHEDULE

SYM	MFR & MODEL #	TOTAL CAPACITY (BTU)	PORTS	OUTDOOR UNIT	ELECTRICAL				WEIGHT (LBS)	REMARKS	ANCHORAGE DETAIL
					V	PH	MCA	MOCP			
BS 1	LG PRHR083A	230,000	8	HRU 1	208	1	0.09	15	75	1	5 M5.1
BS 2	LG PRHR083A	230,000	8	HRU 1	208	1	0.09	15	75	1	5 M5.1

1. PROVIDE FACTORY CONNECTORS AS NECESSARY.

FAN SCHEDULE

SYM	MFR & MODEL #	SERVICE	CFM	ESP	HP	BHP	ELECTRICAL		FAN RPM	WT (LBS)	REMARKS	CONTROL DETAIL	ANCHORAGE DETAIL
							V	PH					
EF 1	GREENHECK CSP-A390-VG	FITNESS	200	0.5	1/4	0.05	115	1	1,241	50	2	6 M5.2	9 M5.1
EF 2	GREENHECK SP-A90-130-VG	RESTROOM	100	0.5	-	12W	115	1	960	30	1	8 M5.2	16 M5.1
EF 3	GREENHECK CSP-A390-VG	ELEC ROOM	300	0.5	1/4	0.1	115	1	1,356	50	2	7 M5.2	9 M5.1
EF 4	GREENHECK SP-A90-130-VG	JANITOR	100	0.5	-	12W	115	1	960	30	1	8 M5.2	16 M5.1
EF 5	GREENHECK SP-A90-130-VG	RESTROOM	100	0.5	-	12W	115	1	960	30	1	8 M5.2	16 M5.1
EF 6	GREENHECK SP-A250	DECON RR	200	0.5	-	83W	115	1	1,000	50	1	8 M5.2	16 M5.1
EF 7	GREENHECK SP-A90-130-VG	RESTROOM	100	0.5	-	12W	115	1	960	30	1	8 M5.2	16 M5.1
EF 8	GREENHECK SP-A90-130-VG	RESTROOM	100	0.5	-	12W	115	1	960	30	1	8 M5.2	16 M5.1
EF 9	GREENHECK SP-A90-130-VG	RESTROOM	100	0.5	-	12W	115	1	960	30	1	8 M5.2	16 M5.1
EF 10	GREENHECK SP-A90-130-VG	RESTROOM	100	0.5	-	12W	115	1	960	30	1	8 M5.2	16 M5.1
EF 11	GREENHECK SQ-16-M2-VG	APP BAY	4,200	1.2	2.0	1.3	208	3	1,613	200	2	9 M5.2	9 M5.1
BF 1	FANTECH FG-8	CEILING	60	1.0	-	109W	120	1	2,800	15	2	6 M5.2	9 M5.1

1. PROVIDE WITH BACKDRAFT DAMPER AND ROOF CAP 2. PROVIDE WITH BACKDRAFT DAMPER

Not for permitting or construction

PBK

ARCHITECT PBK Architects, Inc.
PBK.com
SAN LUIS OBISPO
1327 Archer Street, Suite 110
San Luis Obispo, CA 93401
805-529-3076

PDS
PocockDesignSolutions Inc.

FIRE STATION #44
COASTSIDE FIRE PROTECTION DISTRICT
501 STETSON STREET
MOSS BEACH, CA 94038
BID SET

BID SET

KEY PLAN
PLAN NORTH
TRUE NORTH

REGISTERED PROFESSIONAL ENGINEER
ANDREW R. GUSSMAN
No. M28639
Exp. 12/31/26
MECHANICAL
STATE OF CALIFORNIA

CLIENT
COASTSIDE FIRE PROTECTION DISTRICT
PROJECT NUMBER
230137
DATE 3/13/2026
DRAWN BY: KF/OS CHKED BY: AD
REVISIONS

#	DESCRIPTION	DATE

MECHANICAL FIXTURE SCHEDULES

This document is for plan review only

M0.2

1/30/2025 4:24:54 PM

ROOM #	ROOM NAME	ROOM #	ROOM NAME
101	LOBBY	201	BATTALION CHIEF
102	RESTROOM	202	BALCONY
103	CAPTAIN'S OFFICE	203	BC RESTROOM
104	OFFICE	204	DORM 1
105	ELEVATOR	205	RESTROOM
106	FITNESS	206	ELEVATOR
107	STAIRWAY 1	207	RESTROOM
108	RESTROOM	208	CAPTAIN
109	ELECTRICAL ROOM	209	DORM 2
110	HALLWAY	210	DORM 3
111	CUSTODIAL	211	LAUNDRY
112	ELEVATOR MACHINE	212	HALLWAY
113	STORAGE	213	ACCESSIBLE RR
114	TELECOM	214	BESTIBULE
115	CLASSROOM	215	STORAGE
116	APPARATUS BAY	216	PANTRY
117	YARD STORAGE	217	KITCHEN
118	DECON	218	DINING
119	EMS STORAGE	219	DAYROOM
120	TURNOUT	220	DECK
121	COMPRESSOR		
122	SHOP		
123	HOSE DRY STORAGE		
124	FIRE RISER		
125	VESTIBULE		

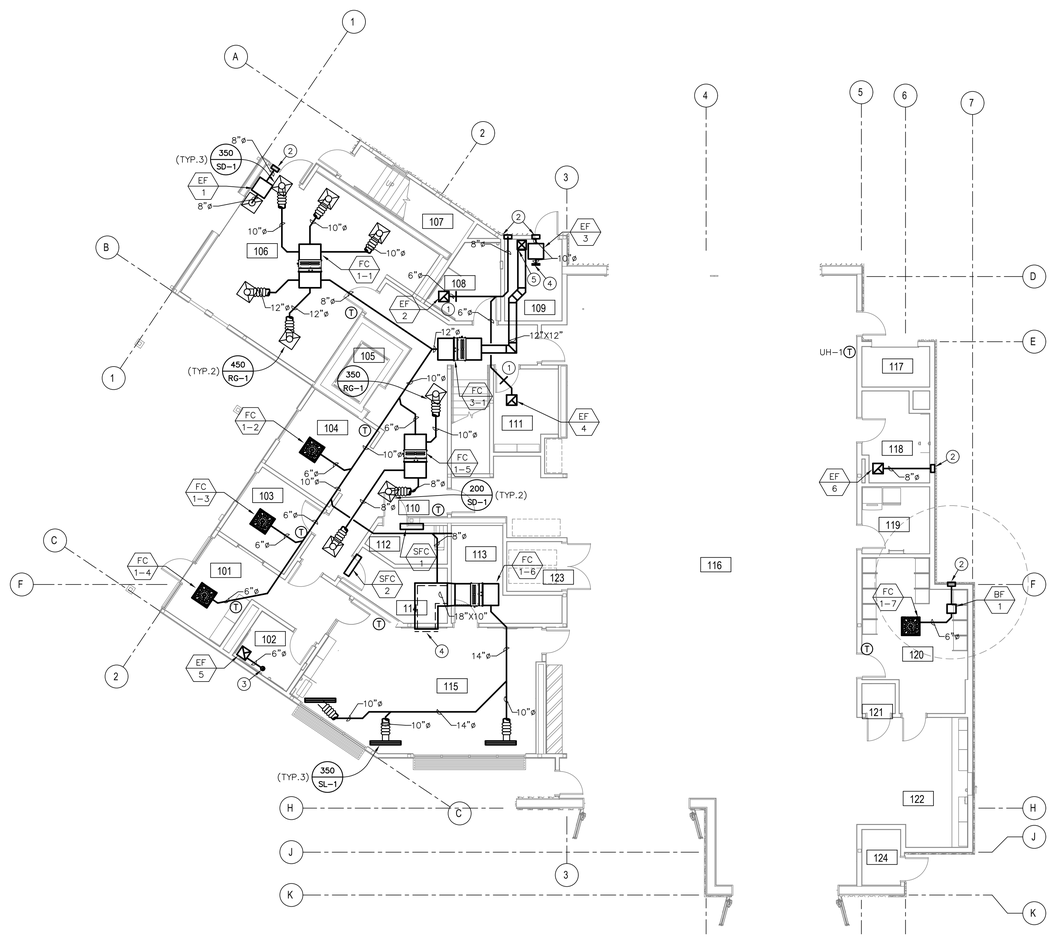

CONSTRUCTION NOTES:

1. ENTIRE INSTALLATION SHALL CONFORM TO THE REQUIREMENTS OF THE 2022 CALIFORNIA MECHANICAL CODE, 2022 CALIFORNIA BUILDING CODE, AND ALL OTHER APPLICABLE CODES AND REGULATIONS, INCLUDING 2022 CALIFORNIA ENERGY CONSERVATION STANDARDS DIVISION T-24.

2. COORDINATE ENTIRE INSTALLATION OF THE HVAC SYSTEM WITH THE WORK OF ALL OTHER TRADES PRIOR TO ANY FABRICATION OR INSTALLATION. PROVIDE ALL FITTINGS, OFFSETS, AND TRANSITIONS AS REQUIRED FOR A COMPLETE WORKABLE INSTALLATION. THE MECHANICAL CONTRACTOR SHALL BE RESPONSIBLE TO COORDINATE ITEMS TO BE PROVIDED BY OTHER TRADES WHERE MENTIONED IN THE CONTRACT DOCUMENTS PRIOR TO BID – NO EXCEPTIONS.

3. COORDINATE THE LOCATIONS OF ALL CEILING DIFFUSERS, REGISTERS, AND GRILLES WITH THE ARCHITECTURAL REFLECTIVE CEILING PLAN, ELECTRICAL LIGHTING LAYOUT AND ARCHITECTURAL ROOM ELEVATIONS. THE ARCHITECT AND ENGINEER SHALL BE IMMEDIATELY NOTIFIED OF ANY CONFLICTS PRIOR TO FABRICATION AND INSTALLATION.

4. FOR INACCESSIBLE AREAS THE CONTRACTOR SHALL PROVIDE ACCESS PANELS FOR ALL DAMPERS, EQUIPMENT, SMOKE DETECTORS, AND CONTROL DEVICES. THESE PANELS SHALL MATCH THE RATING OF THE WALL AND/OR CEILING THAT THEY ARE LOCATED IN. MINIMUM ACCESS PANEL SIZES SHALL BE AS FOLLOWS:
   1) HAND ACCESS: 12"x12"
   2) BODY ACCESS: 30"x30" MIN. WHERE A LARGER ACCESS SIZE IS REQUIRED DUE TO INSTALLATION CONSTRAINTS, THE CONTRACTOR SHALL DO SO AT NO ADDITIONAL COST AND SHALL NOTIFY THE ARCHITECT AND ENGINEER OF DEVIATIONS PRIOR TO INSTALLATION.

5. PLATFORMS, CURBS, AND FLASHINGS FOR MECHANICAL EQUIPMENT SHALL BE AS INDICATED ON THE STRUCTURAL AND ARCHITECTURAL PLANS, UNLESS NOTED OTHERWISE. WHERE THERE IS A CONFLICT WITH THE MECHANICAL PLANS, THE CONTRACTOR SHALL NOTIFY THE ARCHITECT AND ENGINEER PRIOR TO FABRICATION AND INSTALLATION.

6. MANUAL VOLUME DAMPERS SHALL BE PROVIDED IN ALL DUCT BRANCHES TO INDIVIDUAL DIFFUSERS, GRILLES, AND REGISTERS, AS WELL AS FRESH AIR INTAKE DUCTS. DAMPERS SHALL BE LOCATED AT THE BRANCH DUCT LOCATIONS. THE MECHANICAL CONTRACTOR SHALL COORDINATE LOCATIONS OF DAMPERS WITH THE AIR BALANCE CONTRACTOR PRIOR TO BID, SO THEY ARE ACCESSIBLE PRIOR TO INSTALLATION. IN LOCATIONS WHERE THESE DAMPERS ARE INACCESSIBLE, CABLE OPERATED ADJUSTMENT CONTROLS SHALL BE PROVIDED AT NO ADDITIONAL COST. OPPOSED BLADE DAMPERS SHALL NOT BE PERMITTED UNLESS NOTED OTHERWISE.

CONSTRUCTION KEY NOTES:

1. PROVIDE EXHAUST FAN WITH BACK DRAFT DAMPER.
2. EXTERIOR LOUVER WITH 1 SQ FT MINIMUM OF FREE AREA. SEE ARCH DWGS FOR ELEVATION.
3. 6"ø EXHAUST AIR DUCT UP THRU SHAFT.
4. PROVIDE WIRE-MESH OVER OPENING.
5. 14"X14" OSA DUCT UP IN SHAFT TO SECOND FLOOR.

NORTH

MECHANICAL FIRST FLOOR PLAN

SCALE 1/8"=1'-0"

1

Not for permitting or construction

PBK

ARCHITECT PBK Architects, Inc.
PBK.com
SAN LUIS OBISPO
1327 Archer Street, Suite 110
San Luis Obispo, CA 93401
805-529-3076

PDS
PocockDesignSolutions Inc.

FIRE STATION #44
COASTSIDE FIRE PROTECTION DISTRICT

501 STETSON STREET
MOSS BEACH, CA 94038

BID SET

BID SET

KEY PLAN

PLAN NORTH
TRUE NORTH

REGISTERED PROFESSIONAL ENGINEER
ANDREW R. DOSSINGER
No. M30600
Exp. 12/31/26
MECHANICAL
STATE OF CALIFORNIA

CLIENT
COASTSIDE FIRE PROTECTION DISTRICT

PROJECT NUMBER
23-0137

DATE 3/13/2026

DRAWN BY: KF/OS CHKED BY: AD

REVISIONS

#	DESCRIPTION	DATE

MECHANICAL FIRST FLOOR PLAN

This document is for plan review only

M2.1

1/30/2025 4:24:54 PM

ROOM #	ROOM NAME	ROOM #	ROOM NAME
101	LOBBY	201	BATTALION CHIEF
102	RESTROOM	202	BALCONY
103	CAPTAIN'S OFFICE	203	BC RESTROOM
104	OFFICE	204	DORM 1
105	ELEVATOR	205	RESTROOM
106	FITNESS	206	ELEVATOR
107	STAIRWAY 1	207	RESTROOM
108	RESTROOM	208	CAPTAIN
109	ELECTRICAL ROOM	209	DORM 2
110	HALLWAY	210	DORM 3
111	CUSTODIAL	211	LAUNDRY
112	ELEVATOR MACHINE	212	HALLWAY
113	STORAGE	213	ACCESSIBLE RR
114	TELECOM	214	BESTIBULE
115	CLASSROOM	215	STORAGE
116	APPARATUS BAY	216	PANTRY
117	YARD STORAGE	217	KITCHEN
118	DECON	218	DINING
119	EMS STORAGE	219	DAYROOM
120	TURNOUT	220	DECK
121	COMPRESSOR		
122	SHOP		
123	HOSE DRY STORAGE		
124	FIRE RISER		
125	VESTIBULE		

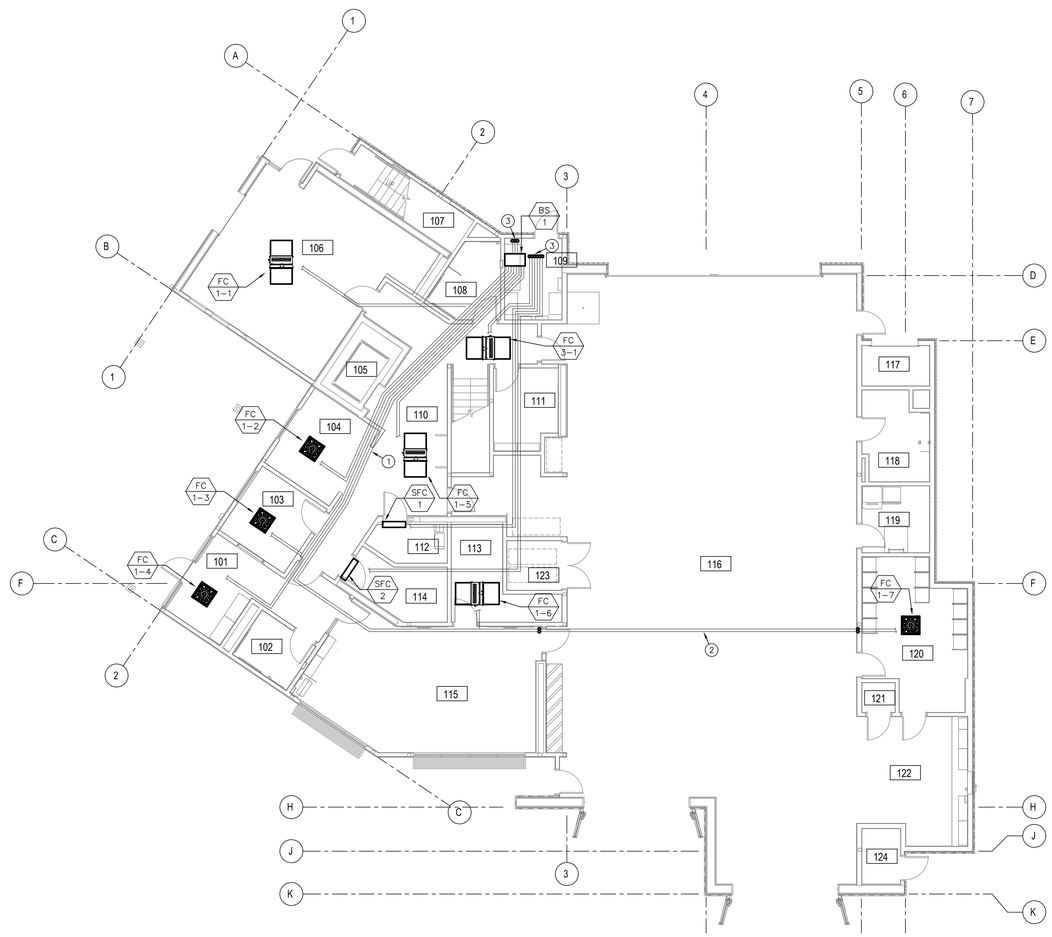

CONSTRUCTION NOTES:

1. ENTIRE INSTALLATION SHALL CONFORM TO THE REQUIREMENTS OF THE 2022 CALIFORNIA MECHANICAL CODE, 2022 CALIFORNIA BUILDING CODE, AND ALL OTHER APPLICABLE CODES AND REGULATIONS, INCLUDING 2022 CALIFORNIA ENERGY CONSERVATION STANDARDS DIVISION T-24.

2. COORDINATE ENTIRE INSTALLATION OF THE HVAC SYSTEM WITH THE WORK OF ALL OTHER TRADES PRIOR TO ANY FABRICATION OR INSTALLATION. PROVIDE ALL FITTINGS, OFFSETS, AND TRANSITIONS AS REQUIRED FOR A COMPLETE WORKABLE INSTALLATION. THE MECHANICAL CONTRACTOR SHALL BE RESPONSIBLE TO COORDINATE ITEMS TO BE PROVIDED BY OTHER TRADES WHERE MENTIONED IN THE CONTRACT DOCUMENTS PRIOR TO BID – NO EXCEPTIONS.

3. COORDINATE THE LOCATIONS OF ALL CEILING DIFFUSERS, REGISTERS, AND GRILLES WITH THE ARCHITECTURAL REFLECTIVE CEILING PLAN, ELECTRICAL LIGHTING LAYOUT AND ARCHITECTURAL ROOM ELEVATIONS. THE ARCHITECT AND ENGINEER SHALL BE IMMEDIATELY NOTIFIED OF ANY CONFLICTS PRIOR TO FABRICATION AND INSTALLATION.

4. FOR INACCESSIBLE AREAS THE CONTRACTOR SHALL PROVIDE ACCESS PANELS FOR ALL DAMPERS, EQUIPMENT, SMOKE DETECTORS, AND CONTROL DEVICES. THESE PANELS SHALL MATCH THE RATING OF THE WALL AND/OR CEILING THAT THEY ARE LOCATED IN. MINIMUM ACCESS PANEL SIZES SHALL BE AS FOLLOWS:
   1) HAND ACCESS: 12"x12"
   2) BODY ACCESS: 30"x30" MIN. WHERE A LARGER ACCESS SIZE IS REQUIRED DUE TO INSTALLATION CONSTRAINTS, THE CONTRACTOR SHALL DO SO AT NO ADDITIONAL COST AND SHALL NOTIFY THE ARCHITECT AND ENGINEER OF DEVIATIONS PRIOR TO INSTALLATION.

5. PLATFORMS, CURBS, AND FLASHINGS FOR MECHANICAL EQUIPMENT SHALL BE AS INDICATED ON THE STRUCTURAL AND ARCHITECTURAL PLANS, UNLESS NOTED OTHERWISE. WHERE THERE IS A CONFLICT WITH THE MECHANICAL PLANS, THE CONTRACTOR SHALL NOTIFY THE ARCHITECT AND ENGINEER PRIOR TO FABRICATION AND INSTALLATION.

6. MANUAL VOLUME DAMPERS SHALL BE PROVIDED IN ALL DUCT BRANCHES TO INDIVIDUAL DIFFUSERS, GRILLES, AND REGISTERS, AS WELL AS FRESH AIR INTAKE DUCTS. DAMPERS SHALL BE LOCATED AT THE BRANCH DUCT LOCATIONS. THE MECHANICAL CONTRACTOR SHALL COORDINATE LOCATIONS OF DAMPERS WITH THE AIR BALANCE CONTRACTOR PRIOR TO BID, SO THEY ARE ACCESSIBLE PRIOR TO INSTALLATION. IN LOCATIONS WHERE THESE DAMPERS ARE INACCESSIBLE, CABLE OPERATED ADJUSTMENT CONTROLS SHALL BE PROVIDED AT NO ADDITIONAL COST. OPPOSED BLADE DAMPERS SHALL NOT BE PERMITTED UNLESS NOTED OTHERWISE.

CONSTRUCTION KEY NOTES:

1. SEE SHEET M5.3 FOR REFRIGERANT PIPE SIZES. CONTRACTOR TO VERIFY REFRIGERANT PIPING SIZE AND ROUTING WITH MANUFACTURER PRIOR TO ORDERING.
2. REFRIGERANT PIPING TO BE CONCEALED ABOVE DROPPED CEILING.
3. REFRIGERANT PIPING UP TO SECOND FLOOR.

NORTH

MECHANICAL PIPING FIRST FLOOR PLAN

SCALE 1/8"=1'-0"

1

1/30/2025 4:24:54 PM

Not for permitting or construction

PBK
ARCHITECT PBK Architects, Inc.
PBK.com
SAN LUIS OBISPO
1327 Archer Street, Suite 110
San Luis Obispo, CA 93401
805-529-3076

PDS
PocockDesignSolutions Inc.

FIRE STATION #44
COASTSIDE FIRE PROTECTION DISTRICT

501 STETSON STREET
MOSS BEACH, CA 94038

BID SET

KEY PLAN

PLAN NORTH
TRUE NORTH

REGISTERED PROFESSIONAL ENGINEER
ANDREW R. DUSSAULT
No. M30630
Exp. 12/31/26
MECHANICAL
STATE OF CALIFORNIA

CLIENT
COASTSIDE FIRE PROTECTION DISTRICT

PROJECT NUMBER
230137

DATE 3/13/2026

DRAWN BY: KF/OS CHKED BY: AD

REVISIONS

#	DESCRIPTION	DATE

MECHANICAL PIPING FIRST FLOOR PLAN

This document is for plan review only

M2.1P

ROOM #	ROOM NAME	ROOM #	ROOM NAME
101	LOBBY	201	BATTALION CHIEF
102	RESTROOM	202	BALCONY
103	CAPTAIN'S OFFICE	203	BC RESTROOM
104	OFFICE	204	DORM 1
105	ELEVATOR	205	RESTROOM
106	FITNESS	206	ELEVATOR
107	STAIRWAY 1	207	RESTROOM
108	RESTROOM	208	CAPTAIN
109	ELECTRICAL ROOM	209	DORM 2
110	HALLWAY	210	DORM 3
111	CUSTODIAL	211	LAUNDRY
112	ELEVATOR MACHINE	212	HALLWAY
113	STORAGE	213	ACCESSIBLE RR
114	TELECOM	214	BESTIBULE
115	CLASSROOM	215	STORAGE
116	APPARATUS BAY	216	PANTRY
117	YARD STORAGE	217	KITCHEN
118	DECON	218	DINING
119	EMS STORAGE	219	DAYROOM
120	TURNOUT	220	DECK
121	COMPRESSOR		
122	SHOP		
123	HOSE DRY STORAGE		
124	FIRE RISER		
125	VESTIBULE		

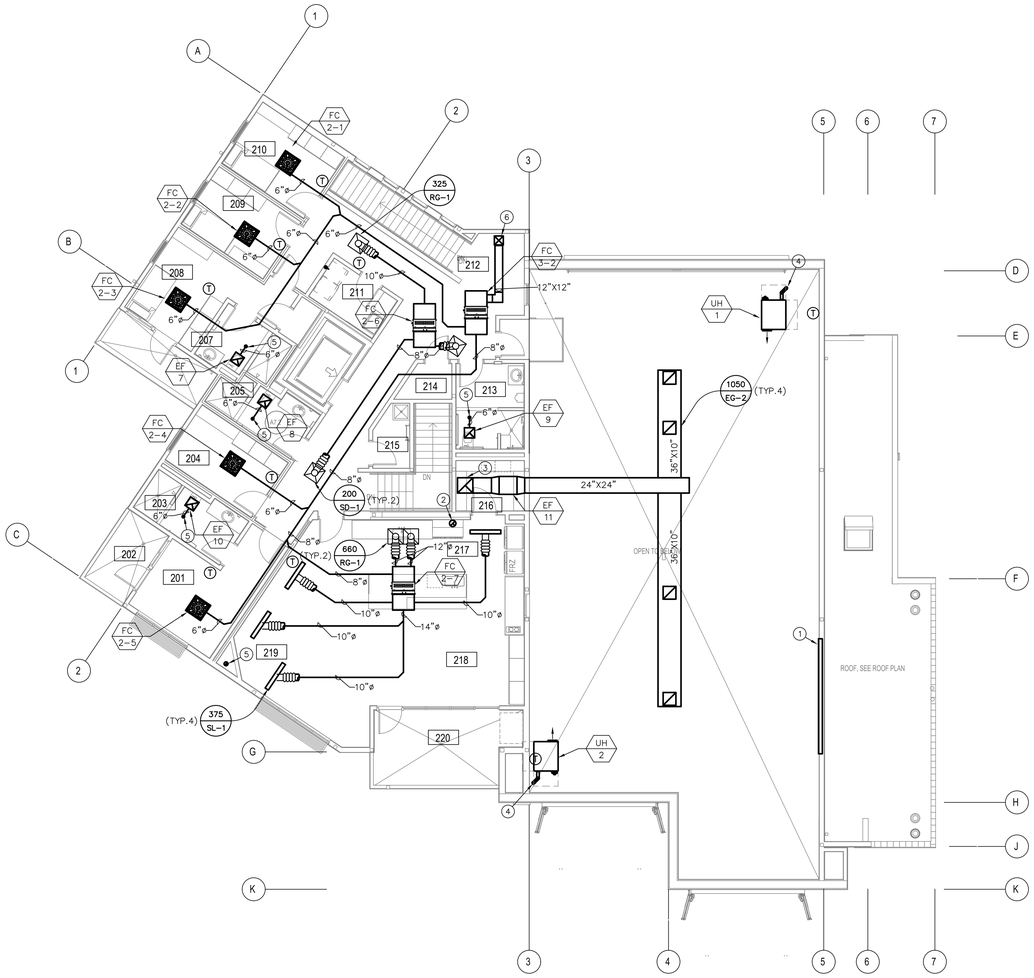

CONSTRUCTION NOTES:

1. ENTIRE INSTALLATION SHALL CONFORM TO THE REQUIREMENTS OF THE 2022 CALIFORNIA MECHANICAL CODE, 2022 CALIFORNIA BUILDING CODE, AND ALL OTHER APPLICABLE CODES AND REGULATIONS, INCLUDING 2022 CALIFORNIA ENERGY CONSERVATION STANDARDS DIVISION T-24.

2. COORDINATE ENTIRE INSTALLATION OF THE HVAC SYSTEM WITH THE WORK OF ALL OTHER TRADES PRIOR TO ANY FABRICATION OR INSTALLATION. PROVIDE ALL FITTINGS, OFFSETS, AND TRANSITIONS AS REQUIRED FOR A COMPLETE WORKABLE INSTALLATION. THE MECHANICAL CONTRACTOR SHALL BE RESPONSIBLE TO COORDINATE ITEMS TO BE PROVIDED BY OTHER TRADES WHERE MENTIONED IN THE CONTRACT DOCUMENTS PRIOR TO BID – NO EXCEPTIONS.

3. COORDINATE THE LOCATIONS OF ALL CEILING DIFFUSERS, REGISTERS, AND GRILLES WITH THE ARCHITECTURAL REFLECTIVE CEILING PLAN, ELECTRICAL LIGHTING LAYOUT AND ARCHITECTURAL ROOM ELEVATIONS. THE ARCHITECT AND ENGINEER SHALL BE IMMEDIATELY NOTIFIED OF ANY CONFLICTS PRIOR TO FABRICATION AND INSTALLATION.

4. FOR INACCESSIBLE AREAS THE CONTRACTOR SHALL PROVIDE ACCESS PANELS FOR ALL DAMPERS, EQUIPMENT, SMOKE DETECTORS, AND CONTROL DEVICES. THESE PANELS SHALL MATCH THE RATING OF THE WALL AND/OR CEILING THAT THEY ARE LOCATED IN. MINIMUM ACCESS PANEL SIZES SHALL BE AS FOLLOWS:
   1) HAND ACCESS: 12"x12"
   2) BODY ACCESS: 30"x30" MIN. WHERE A LARGER ACCESS SIZE IS REQUIRED DUE TO INSTALLATION CONSTRAINTS, THE CONTRACTOR SHALL DO SO AT NO ADDITIONAL COST AND SHALL NOTIFY THE ARCHITECT AND ENGINEER OF DEVIATIONS PRIOR TO INSTALLATION.

5. PLATFORMS, CURBS, AND FLASHINGS FOR MECHANICAL EQUIPMENT SHALL BE AS INDICATED ON THE STRUCTURAL AND ARCHITECTURAL PLANS, UNLESS NOTED OTHERWISE. WHERE THERE IS A CONFLICT WITH THE MECHANICAL PLANS, THE CONTRACTOR SHALL NOTIFY THE ARCHITECT AND ENGINEER PRIOR TO FABRICATION AND INSTALLATION.

6. MANUAL VOLUME DAMPERS SHALL BE PROVIDED IN ALL DUCT BRANCHES TO INDIVIDUAL DIFFUSERS, GRILLES, AND REGISTERS, AS WELL AS FRESH AIR INTAKE DUCTS. DAMPERS SHALL BE LOCATED AT THE BRANCH DUCT LOCATIONS. THE MECHANICAL CONTRACTOR SHALL COORDINATE LOCATIONS OF DAMPERS WITH THE AIR BALANCE CONTRACTOR PRIOR TO BID, SO THEY ARE ACCESSIBLE PRIOR TO INSTALLATION. IN LOCATIONS WHERE THESE DAMPERS ARE INACCESSIBLE, CABLE OPERATED ADJUSTMENT CONTROLS SHALL BE PROVIDED AT NO ADDITIONAL COST. OPPOSED BLADE DAMPERS SHALL NOT BE PERMITTED UNLESS NOTED OTHERWISE.

CONSTRUCTION KEY NOTES:

1. MAKEUP AIR LOUVER WITH MIN. 10 SQ FT OF FREE AREA AND MAX HEIGHT OF 36".
2. 10"ø EXHAUST AIR DUCT DOWN TO P.O.C. AT KITCHEN HOOD AND UP THRU ROOF.
3. 24"X24" EXHAUST AIR DUCT UP THRU ROOF.
4. 4" VENT UP THRU ROOF.
5. 6" EXHAUST AIR DUCT UP THRU ROOF TO TERMINATE WITH ROOF CAP.
6. 14"X14" OSA DUCT UP THRU ROOF AND DOWN TO FIRST FLOOR.

NORTH

MECHANICAL SECOND FLOOR PLAN

SCALE 1/8"=1'-0"

1

1/30/2025 4:24:54 PM

Not for permitting or construction

PBK
ARCHITECT PBK Architects, Inc.
PBK.com
SAN LUIS OBISPO
1327 Archer Street, Suite 110
San Luis Obispo, CA 93401
805-529-3076

PDS
PocockDesignSolutions Inc.

FIRE STATION #44
COASTSIDE FIRE PROTECTION DISTRICT

501 STETSON STREET
MOSS BEACH, CA 94038

BID SET

BID SET

KEY PLAN

PLAN NORTH

TRUE NORTH

REGISTERED PROFESSIONAL ENGINEER
ANDREW R. DUSSAULT
No. M28828
Exp. 3-31-26
MECHANICAL
STATE OF CALIFORNIA

CLIENT
COASTSIDE FIRE PROTECTION DISTRICT

PROJECT NUMBER
230137

DATE 3/13/2026

DRAWN BY: KF/OS CHKED BY: AD

REVISIONS

#	DESCRIPTION	DATE

MECHANICAL SECOND FLOOR PLAN

This document is for plan review only

M2.2

ROOM #	ROOM NAME	ROOM #	ROOM NAME
101	LOBBY	201	BATTALION CHIEF
102	RESTROOM	202	BALCONY
103	CAPTAIN'S OFFICE	203	BC RESTROOM
104	OFFICE	204	DORM 1
105	ELEVATOR	205	RESTROOM
106	FITNESS	206	ELEVATOR
107	STAIRWAY 1	207	RESTROOM
108	RESTROOM	208	CAPTAIN
109	ELECTRICAL ROOM	209	DORM 2
110	HALLWAY	210	DORM 3
111	CUSTODIAL	211	LAUNDRY
112	ELEVATOR MACHINE	212	HALLWAY
113	STORAGE	213	ACCESSIBLE RR
114	TELECOM	214	BESTIBULE
115	CLASSROOM	215	STORAGE
116	APPARATUS BAY	216	PANTRY
117	YARD STORAGE	217	KITCHEN
118	DECON	218	DINING
119	EMS STORAGE	219	DAYROOM
120	TURNOUT	220	DECK
121	COMPRESSOR		
122	SHOP		
123	HOSE DRY STORAGE		
124	FIRE RISER		
125	VESTIBULE		

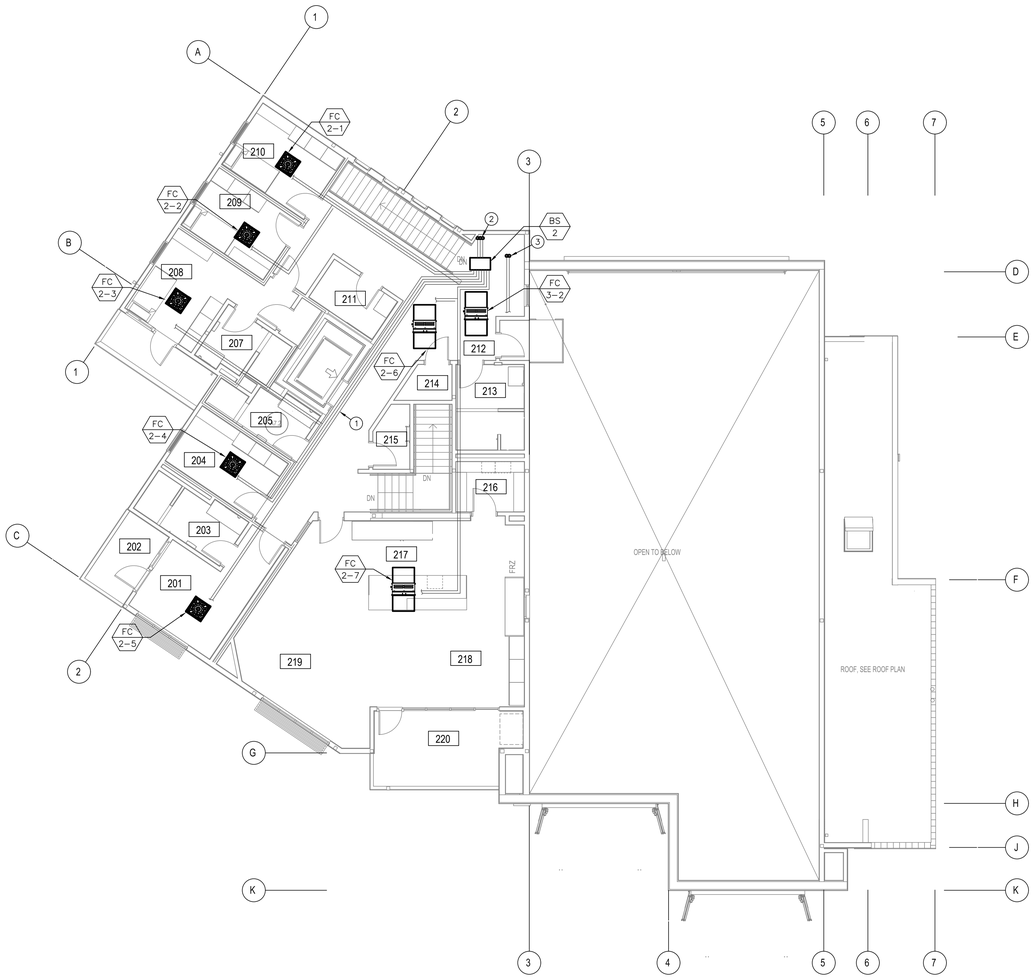

CONSTRUCTION NOTES:

1. ENTIRE INSTALLATION SHALL CONFORM TO THE REQUIREMENTS OF THE 2022 CALIFORNIA MECHANICAL CODE, 2022 CALIFORNIA BUILDING CODE, AND ALL OTHER APPLICABLE CODES AND REGULATIONS, INCLUDING 2022 CALIFORNIA ENERGY CONSERVATION STANDARDS DIVISION T-24.
2. COORDINATE ENTIRE INSTALLATION OF THE HVAC SYSTEM WITH THE WORK OF ALL OTHER TRADES PRIOR TO ANY FABRICATION OR INSTALLATION. PROVIDE ALL FITTINGS, OFFSETS, AND TRANSITIONS AS REQUIRED FOR A COMPLETE WORKABLE INSTALLATION. THE MECHANICAL CONTRACTOR SHALL BE RESPONSIBLE TO COORDINATE ITEMS TO BE PROVIDED BY OTHER TRADES WHERE MENTIONED IN THE CONTRACT DOCUMENTS PRIOR TO BID – NO EXCEPTIONS.
3. COORDINATE THE LOCATIONS OF ALL CEILING DIFFUSERS, REGISTERS, AND GRILLES WITH THE ARCHITECTURAL REFLECTIVE CEILING PLAN, ELECTRICAL LIGHTING LAYOUT AND ARCHITECTURAL ROOM ELEVATIONS. THE ARCHITECT AND ENGINEER SHALL BE IMMEDIATELY NOTIFIED OF ANY CONFLICTS PRIOR TO FABRICATION AND INSTALLATION.
4. FOR INACCESSIBLE AREAS THE CONTRACTOR SHALL PROVIDE ACCESS PANELS FOR ALL DAMPERS, EQUIPMENT, SMOKE DETECTORS, AND CONTROL DEVICES. THESE PANELS SHALL MATCH THE RATING OF THE WALL AND/OR CEILING THAT THEY ARE LOCATED IN. MINIMUM ACCESS PANEL SIZES SHALL BE AS FOLLOWS:
   1) HAND ACCESS: 12"x12"
   2) BODY ACCESS: 30"x30" MIN. WHERE A LARGER ACCESS SIZE IS REQUIRED DUE TO INSTALLATION CONSTRAINTS, THE CONTRACTOR SHALL DO SO AT NO ADDITIONAL COST AND SHALL NOTIFY THE ARCHITECT AND ENGINEER OF DEVIATIONS PRIOR TO INSTALLATION.
5. PLATFORMS, CURBS, AND FLASHINGS FOR MECHANICAL EQUIPMENT SHALL BE AS INDICATED ON THE STRUCTURAL AND ARCHITECTURAL PLANS, UNLESS NOTED OTHERWISE. WHERE THERE IS A CONFLICT WITH THE MECHANICAL PLANS, THE CONTRACTOR SHALL NOTIFY THE ARCHITECT AND ENGINEER PRIOR TO FABRICATION AND INSTALLATION.
6. MANUAL VOLUME DAMPERS SHALL BE PROVIDED IN ALL DUCT BRANCHES TO INDIVIDUAL DIFFUSERS, GRILLES, AND REGISTERS, AS WELL AS FRESH AIR INTAKE DUCTS. DAMPERS SHALL BE LOCATED AT THE BRANCH DUCT LOCATIONS. THE MECHANICAL CONTRACTOR SHALL COORDINATE LOCATIONS OF DAMPERS WITH THE AIR BALANCE CONTRACTOR PRIOR TO BID, SO THEY ARE ACCESSIBLE PRIOR TO INSTALLATION. IN LOCATIONS WHERE THESE DAMPERS ARE INACCESSIBLE, CABLE OPERATED ADJUSTMENT CONTROLS SHALL BE PROVIDED AT NO ADDITIONAL COST. OPPOSED BLADE DAMPERS SHALL NOT BE PERMITTED UNLESS NOTED OTHERWISE.

CONSTRUCTION KEY NOTES:

1. SEE SHEET M5.3 FOR REFRIGERANT PIPE SIZES. CONTRACTOR TO VERIFY REFRIGERANT PIPING SIZE AND ROUTING WITH MANUFACTURER PRIOR TO ORDERING.
2. REFRIGERANT PIPING DOWN TO FIRST FLOOR AND UP TO ROOF.
3. REFRIGERANT PIPING UP TO ROOF.

NORTH

MECHANICAL PIPING SECOND FLOOR PLAN

SCALE 1/8"=1'-0"

1

1/30/2025 4:24:54 PM

Not for permitting or construction

PBK

ARCHITECT PBK Architects, Inc.
PBK.com
SAN LUIS OBISPO
1327 Archer Street, Suite 110
San Luis Obispo, CA 93401
805-529-3076

PDS
PocockDesignSolutions Inc.

FIRE STATION #44
COASTSIDE FIRE PROTECTION DISTRICT

501 STETSON STREET
MOSS BEACH, CA 94038

BID SET

BID SET

KEY PLAN

PLAN NORTH
TRUE NORTH

REGISTERED PROFESSIONAL ENGINEER
ANDREW R. DUSSEAULT
No. M28828
Exp. 3/31/26
MECHANICAL
STATE OF CALIFORNIA

CLIENT
COASTSIDE FIRE PROTECTION DISTRICT

PROJECT NUMBER
230137

DATE 3/13/2026

DRAWN BY: KF/OS CHKED BY: AD

REVISIONS

#	DESCRIPTION	DATE

MECHANICAL PIPING SECOND FLOOR PLAN

M2.2P

This document is for plan review only

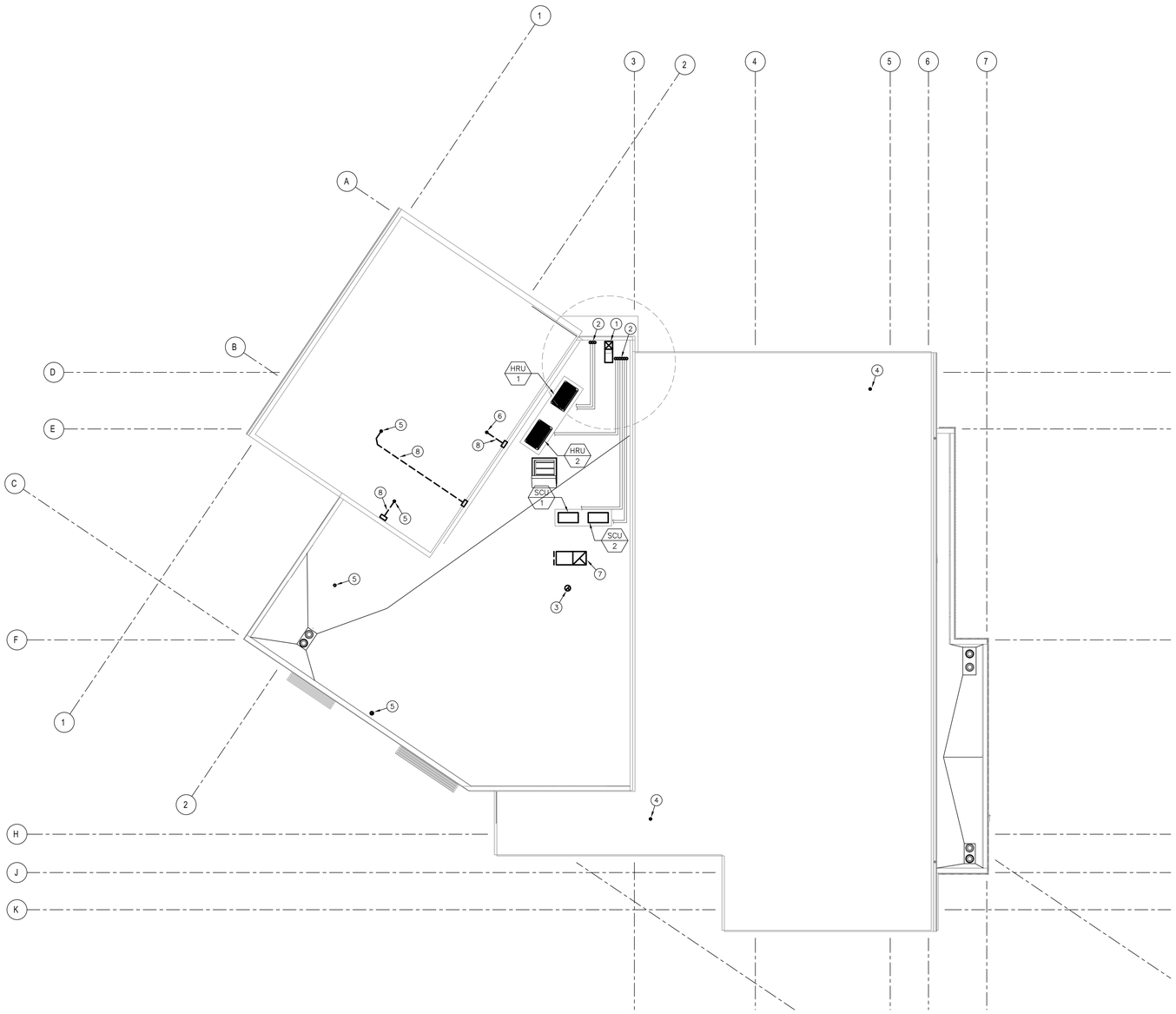

CONSTRUCTION NOTES:

1. ENTIRE INSTALLATION SHALL CONFORM TO THE REQUIREMENTS OF THE 2022 CALIFORNIA MECHANICAL CODE, 2022 CALIFORNIA BUILDING CODE, AND ALL OTHER APPLICABLE CODES AND REGULATIONS, INCLUDING 2022 CALIFORNIA ENERGY CONSERVATION STANDARDS DIVISION T–24.
2. COORDINATE ENTIRE INSTALLATION OF THE HVAC SYSTEM WITH THE WORK OF ALL OTHER TRADES PRIOR TO ANY FABRICATION OR INSTALLATION. PROVIDE ALL FITTINGS, OFFSETS, AND TRANSITIONS AS REQUIRED FOR A COMPLETE WORKABLE INSTALLATION. THE MECHANICAL CONTRACTOR SHALL BE RESPONSIBLE TO COORDINATE ITEMS TO BE PROVIDED BY OTHER TRADES WHERE MENTIONED IN THE CONTRACT DOCUMENTS PRIOR TO BID – NO EXCEPTIONS.
3. COORDINATE THE LOCATIONS OF ALL CEILING DIFFUSERS, REGISTERS, AND GRILLES WITH THE ARCHITECTURAL REFLECTIVE CEILING PLAN, ELECTRICAL LIGHTING LAYOUT AND ARCHITECTURAL ROOM ELEVATIONS. THE ARCHITECT AND ENGINEER SHALL BE IMMEDIATELY NOTIFIED OF ANY CONFLICTS PRIOR TO FABRICATION AND INSTALLATION.
4. FOR INACCESSIBLE AREAS THE CONTRACTOR SHALL PROVIDE ACCESS PANELS FOR ALL DAMPERS, EQUIPMENT, SMOKE DETECTORS, AND CONTROL DEVICES. THESE PANELS SHALL MATCH THE RATING OF THE WALL AND/OR CEILING THAT THEY ARE LOCATED IN. MINIMUM ACCESS PANEL SIZES SHALL BE AS FOLLOWS:
   1) HAND ACCESS: 12"x12"
   2) BODY ACCESS: 30"x30" MIN. WHERE A LARGER ACCESS SIZE IS REQUIRED DUE TO INSTALLATION CONSTRAINTS, THE CONTRACTOR SHALL DO SO AT NO ADDITIONAL COST AND SHALL NOTIFY THE ARCHITECT AND ENGINEER OF DEVIATIONS PRIOR TO INSTALLATION.
5. PLATFORMS, CURBS, AND FLASHINGS FOR MECHANICAL EQUIPMENT SHALL BE AS INDICATED ON THE STRUCTURAL AND ARCHITECTURAL PLANS, UNLESS NOTED OTHERWISE. WHERE THERE IS A CONFLICT WITH THE MECHANICAL PLANS, THE CONTRACTOR SHALL NOTIFY THE ARCHITECT AND ENGINEER PRIOR TO FABRICATION AND INSTALLATION.
6. MANUAL VOLUME DAMPERS SHALL BE PROVIDED IN ALL DUCT BRANCHES TO INDIVIDUAL DIFFUSERS, GRILLES, AND REGISTERS, AS WELL AS FRESH AIR INTAKE DUCTS. DAMPERS SHALL BE LOCATED AT THE BRANCH DUCT LOCATIONS. THE MECHANICAL CONTRACTOR SHALL COORDINATE LOCATIONS OF DAMPERS WITH THE AIR BALANCE CONTRACTOR PRIOR TO BID, SO THEY ARE ACCESSIBLE PRIOR TO INSTALLATION. IN LOCATIONS WHERE THESE DAMPERS ARE INACCESSIBLE, CABLE OPERATED ADJUSTMENT CONTROLS SHALL BE PROVIDED AT NO ADDITIONAL COST. OPPOSED BLADE DAMPERS SHALL NOT BE PERMITTED UNLESS NOTED OTHERWISE.

CONSTRUCTION KEY NOTES:

1. 14"X14" OSA DUCT DOWN THRU ROOF AND TO TERMINATE ABOVE ROOF WITH GOOSENECK. SEE DETAIL 10/M5.1.
2. REFRIGERANT PIPING DOWN THRU ROOF. SEE DETAIL 14/M5.1. SEE SHEET M5.3 FOR REFRIGERANT PIPE SIZES. CONTRACTOR TO VERIFY REFRIGERANT PIPING SIZE AND ROUTING WITH MANUFACTURER PRIOR TO ORDERING.
3. 10ø EXHAUST AIR DUCT DOWN THRU ROOF. TO TERMINATE ABOVE ROOFLINE WITH FACTORY ROOF CAP.
4. 4"ø FLUE DOWN THRU ROOF. TO TERMINATE PER MANUFACTURER RECOMMENDATIONS.
5. 6"ø EXHAUST AIR DUCT DOWN THRU ROOF. TO TERMINATE ABOVE ROOFLINE WITH FACTORY WALL CAP. SEE DETAIL 16/M5.1.
6. 4"ø DRYER EXHAUST AIR DUCT DOWN THRU ROOF. TO TERMINATE ABOVE ROOFLINE WITH FACTORY WALL CAP.
7. 24"X24" EXHAUST DUCT DOWN THRU ROOF. TO TERMINATE ABOVE ROOFLINE WITH GOOSENECK. SEE DETAIL 10/M5.1.
8. DUCT TO BE INSTALLED BELOW GABLE ROOF.

NORTH

MECHANICAL ROOF PLAN

SCALE 1/8"=1'–0"

1

1/30/2025 4:24:54 PM

Not for permitting or construction

PBK

ARCHITECT PBK Architects, Inc.
PBK.com
SAN LUIS OBISPO
1327 Archer Street, Suite 110
San Luis Obispo, CA 93401
805-529-3076

PDS
PocockDesignSolutions Inc.

FIRE STATION #44
COASTSIDE FIRE PROTECTION DISTRICT

501 STETSON STREET
MOSS BEACH, CA 94038
BID SET

BID SET

KEY PLAN

PLAN NORTH
TRUE NORTH

REGISTERED PROFESSIONAL ENGINEER
ANDREW R. DUSSAULT
No. M28828
Exp. 3/31/26
MECHANICAL
STATE OF CALIFORNIA

CLIENT
COASTSIDE FIRE PROTECTION DISTRICT
PROJECT NUMBER
230137
DATE 3/13/2026
DRAWN BY: KF/OS CHKED BY: AD
REVISIONS

#	DESCRIPTION	DATE

MECHANICAL ROOF PLAN

This document is for plan review only

M3.1

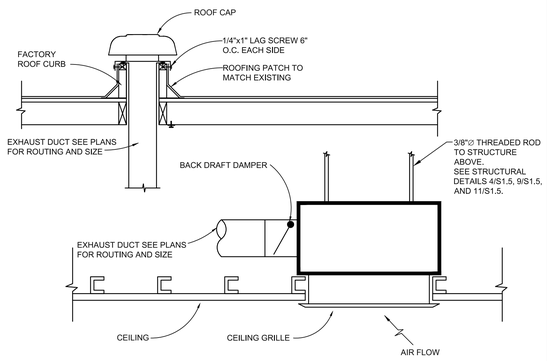

CEILING EXHAUST FAN ANCHORAGE DETAIL

SCALE NONE | 16

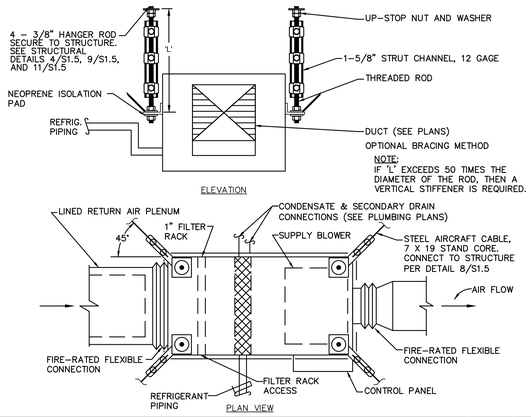

DUCTED FAN COIL ANCHORAGE

SCALE NONE | 12

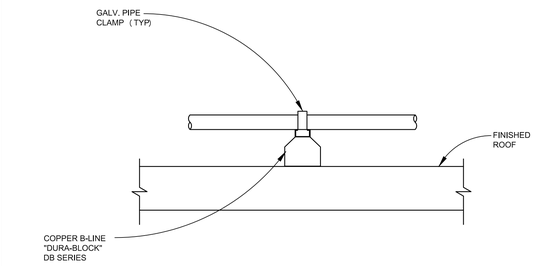

NOTES:
1. COORDINATE WITH ROOFING MANUFACTURER TO ENSURE PROPER INSTALLATION IN ACCORDANCE WITH ALL ROOFING WARRANTEES, EXISTING OR NEW, AND SO AS NOT TO VOID SUCH WARRANTEES.

BASE-MOUNTED PIPING SUPPORT DETAIL

SCALE NONE | 8

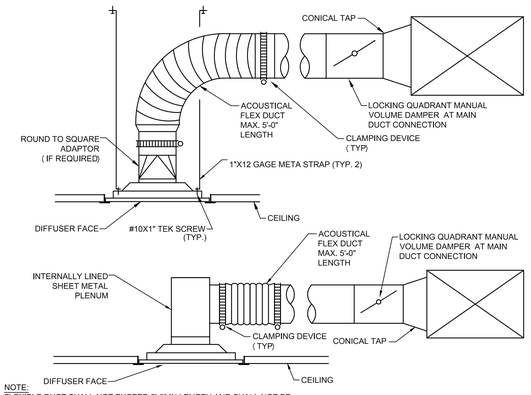

NOTE:
FLEXIBLE DUCT SHALL NOT EXCEED 5'-0" IN LENGTH AND SHALL NOT BE USED IN LIEU OF A RIGID ELBOW OR TRANSITION PER CMC REQUIREMENTS.

CEILING DIFFUSER DETAIL

SCALE NONE | 4

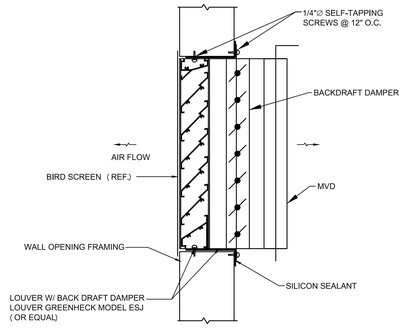

EXTERIOR LOUVER ATTACHMENT DETAIL

SCALE NONE | 15

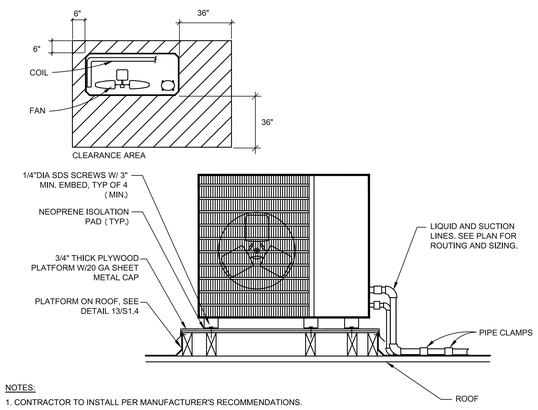

NOTES:
1. CONTRACTOR TO INSTALL PER MANUFACTURER'S RECOMMENDATIONS.

CONDENSING UNIT ANCHORAGE DETAIL

SCALE NONE | 11

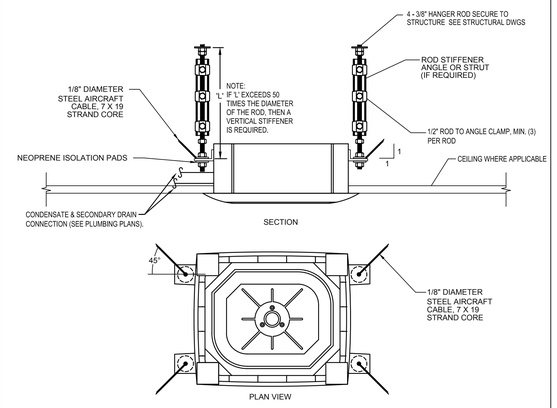

CASSETTE FAN COIL ANCHORAGE

SCALE NONE | 7

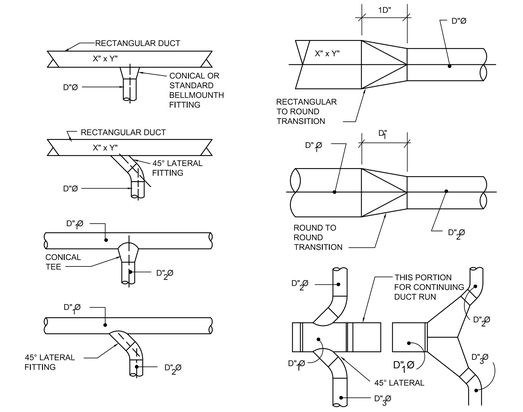

DUCTWORK TRANSITION DETAIL

SCALE NONE | 3

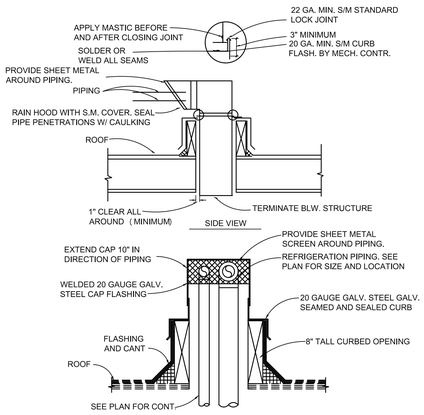

REFRIGERANT PIPING PENETRATION UP THRU ROOF DETAIL

SCALE NONE | 14

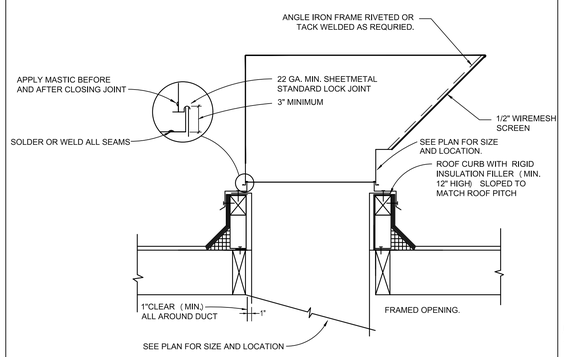

DUCT PENETRATION THRU ROOF DETAIL

SCALE NONE | 10

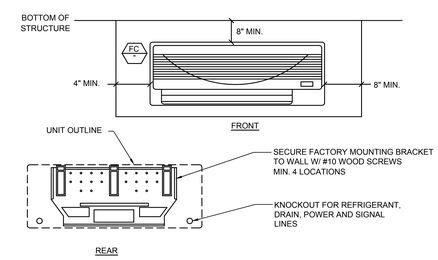

NOTES:
1. CLEARANCES OF 4" ON TOP OF AND TO THE LEFT OF THE FAN COIL UNIT ARE ABSOLUTE MIN.. CLEARANCES OF 10" ARE RECOMMENDED.
2. REFRIGERANT IS METERED BY CAPILLARY TUBES IN THE OUTDOOR UNIT. INSULATE BOTH REFRIGERANT LINES.
3. REFRIGERANT, DRAIN, AND POWER CONNECTIONS MAY BE MADE IN UNIT REAR, BOTTOM,
4. CONTRACTOR TO INSTALL PER MANUFACTURER'S RECOMMENDATIONS.

WALL-MOUNTED FAN COIL ANCHORAGE

SCALE NONE | 6

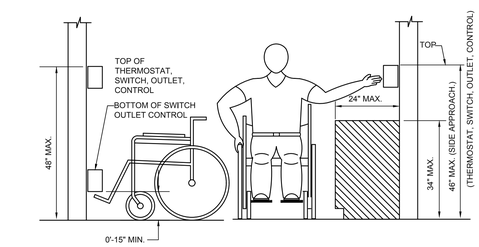

THERMOSTAT MOUNTING DETAIL

SCALE NONE | 2

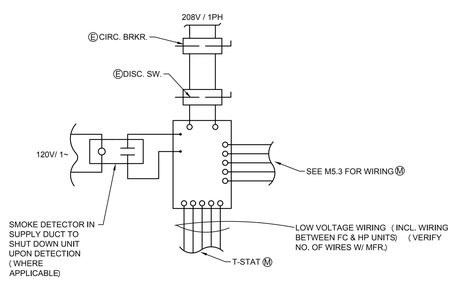

LEGEND:
Ⓔ PROVIDED BY ELEC.
Ⓜ PROVIDED BY MECH.

FAN COIL UNIT WIRING DIAGRAM

SCALE NONE | 13

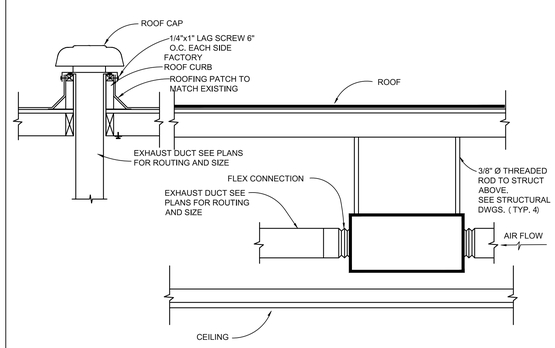

INLINE EXHAUST FAN ANCHORAGE DETAIL

SCALE NONE | 9

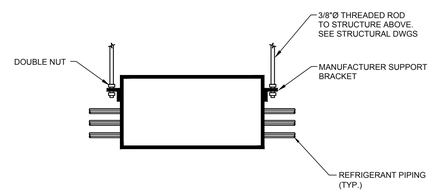

BRANCH SELECTOR ANCHORAGE

SCALE NONE | 5

RECTANGULAR DUCT			ROUND DUCT		
MAX. OF DUCT PERIMETER/IN.	PAIR AT 8 FT. SPACING	MAX. LOAD EACH HANGER/LBS.	DIAMETER /INCHES	STRAP AT 12 FT. SPACING	MAX. LOAD EACH HANGER/LBS.
P/2 =72	1"X 20 GA.	320	UP TO 24"	1"X 22 GA.	260
P/2 =96	1"X 18 GA.	420	25" TO 36"	1"X 20 GA.	320
P/2 =120	1"X 16 GA.	700	37" TO 50"	(2)1"X 20 GA.	320

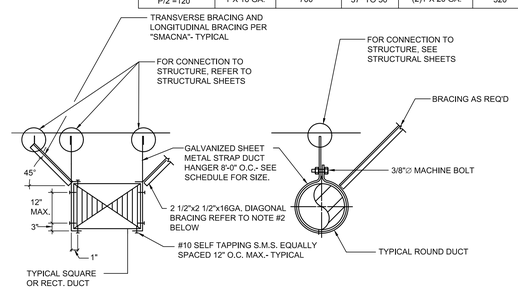

NOTES:
1. PROVIDE TRANSVERSE BRACING AT 4O FT. AND LONGITUDINAL BRACING AT 80 FT. (LATEST SMACNA SEISMIC RESTRAINT MANUAL)

DUCTWORK HANGER SUPPORT DETAIL

SCALE NONE | 1

1/30/2025 4:24:54 PM

Not for permitting or construction

PBK

ARCHITECT
PBK Architects, Inc.
PBK.com
SAN LUIS OBISPO
1327 Archer Street, Suite 110
San Luis Obispo, CA 93401
805-529-3076

PDS
PocockDesignSolutions Inc.

FIRE STATION #44
COASTSIDE FIRE PROTECTION DISTRICT
501 STETSON STREET
MOSS BEACH, CA 94038
BID SET

BID SET

KEY PLAN
PLAN NORTH
TRUE NORTH

REGISTERED PROFESSIONAL ENGINEER
ANDREW R. GUSSIAK
No. M28828
Exp. 3-31-26
MECHANICAL
STATE OF CALIFORNIA

CLIENT
COASTSIDE FIRE PROTECTION DISTRICT
PROJECT NUMBER
230137
DATE 3/13/2026
DRAWN BY: KF/OS CHKED BY: AD
REVISIONS

#	DESCRIPTION	DATE

MECHANICAL DETAILS

This document is for plan review only

M5.1

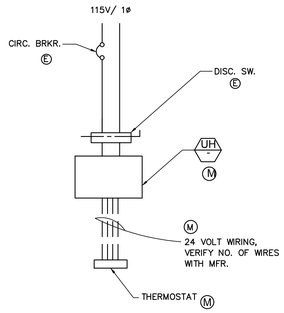

LEGEND:

(E) PROVIDED BY ELEC.

(M) PROVIDED BY MECH.

UNIT HEATER WIRING DIAGRAM

SCALE NONE | 12

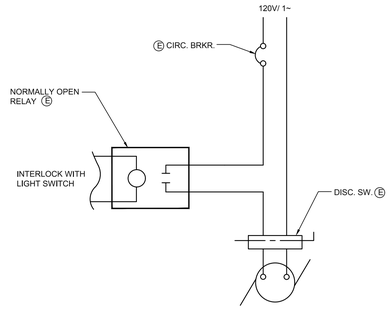

LEGEND:

(E) PROVIDED BY ELEC.

(M) PROVIDED BY MECH.

EXHAUST FAN WIRING DIAGRAM

SCALE NONE | 8

* NOTE: AREA DETECTOR PROVIDED AND INSTALLED BY ELECTRICAL CONTRACTOR. SMOKE/FIRE DAMPER PROVIDED AND INSTALLED BY MECHANICAL CONTRACTOR. (SEE ELECTRICAL PLANS FOR AREA DETECTOR LOCATIONS.)

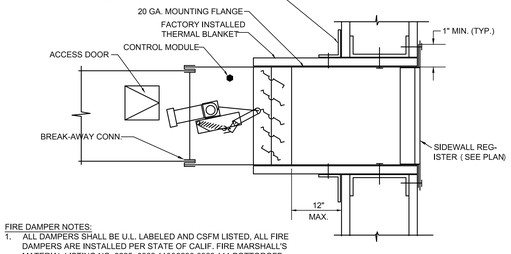

FIRE DAMPER NOTES:

1. ALL DAMPERS SHALL BE U.L. LABELED AND CSFM LISTED. ALL FIRE DAMPERS ARE INSTALLED PER STATE OF CALIF. FIRE MARSHALL'S MATERIAL LISTING NO. 3225- 0368:110&3230-0368:111 POTTOROFF FSD-141-OP OR EQUAL.
2. DAMPER DETAIL FOR REFERENCE ONLY. DAMPERS SHALL BE STATE FIRE MARSHALL APPROVED AND INSTALLED STRICTLY PER MANUFACTURER'S PRINTED INSTRUCTIONS MANUFACTURE'S INSTALLATION INSTRUCTIONS SHALL BE MADE AVAILABLE TO THE INSPECTING AUTHORITIES.
3. PROVIDE SQUARE TO ROUND CAP AND/OR TRANSITION TO DUCT AS REQUIRED.

SMOKE / FIRE COMBINATION DAMPER DETAIL

SCALE NONE | 4

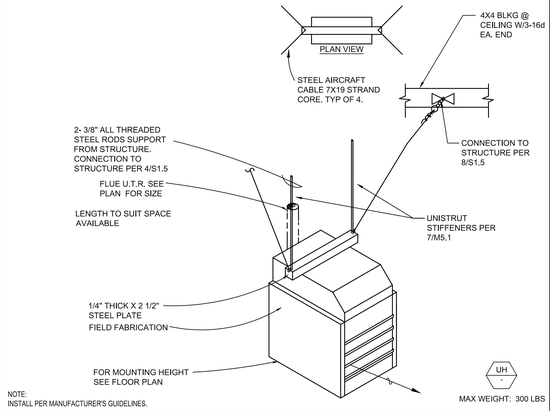

NOTE:
INSTALL PER MANUFACTURER'S GUIDELINES.

UNIT HEATER ANCHORAGE DETAIL

SCALE NONE | 11

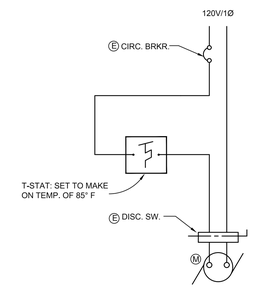

LEGEND:

(E) PROVIDED BY ELEC.

(M) PROVIDED BY MECH.

EXHAUST FAN WIRING DIAGRAM

SCALE NONE | 7

U.L. LISTED SYSTEM NO. W-L-5039:

1. F RATINGS - 1 AND 2 HR
2. T RATINGS - 3/4, 1 AND 1-1/2 HR

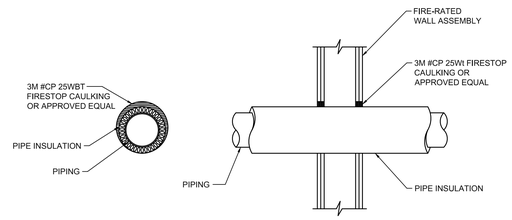

NOTES:

1. THE HOURLY F RATING OF THE FIRESTOP SYSTEM IS 1 HR WHEN INSTALLED IN A 1 HR FIRE RATED WALL AND 2 HR WHEN INSTALLED IN A 2 HR FIRE RATED WALL.
2. PIPE HANGER INSTALLATION SHALL BE IN ACCORDANCE REQUIREMENTS PER U.L. LISTING OR APPROVED EQUAL.
3. REFER TO ARCHITECTURAL SHEETS FOR LOCATION OF ALL FIRE-RATED WALLS.

PIPING THRU RATED WALL

SCALE NONE | 3

NOT USED

SCALE NONE | 10

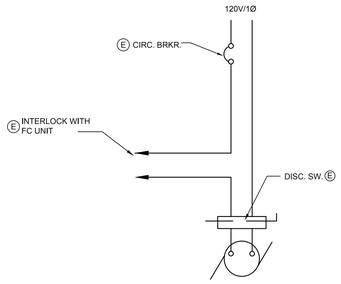

NOTE:
INTERLOCK EF-1 WITH FC-1-1
INTERLOCK BF-1 WITH FC-1-7

LEGEND:

(E) PROVIDED BY ELEC.

(M) PROVIDED BY MECH.

SUPPLY / EXHAUST FAN WIRING DIAGRAM

SCALE NONE | 6

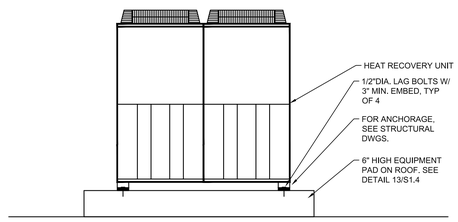

VRF HRU ANCHORAGE DETAIL

SCALE NONE | 2

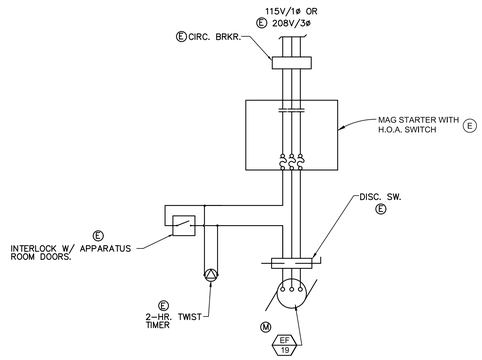

LEGEND:

(E) PROVIDED BY ELEC.

(M) PROVIDED BY MECH.

APPARATUS BAY EXHAUST FAN WIRING DIAGRAM

SCALE NONE | 9

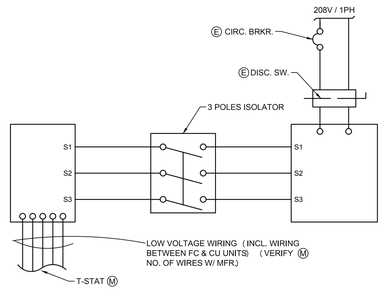

NOTE: INSTALL PER MANUFACTURER'S GUIDELINES.

LEGEND:

(E) PROVIDED BY ELEC.

(M) PROVIDED BY MECH.

SPLIT SYSTEM AC UNIT WIRING DIAGRAM

SCALE NONE | 5

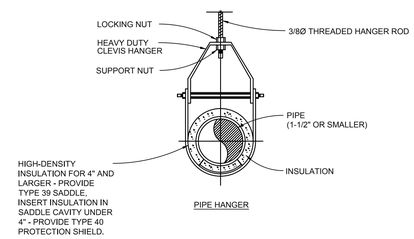

PIPE HANGER

PIPING ANCHORAGE DETAIL

SCALE NONE | 1

1/30/2025 4:24:54 PM

Not for permitting or construction

PBK

ARCHITECT PBK Architects, Inc.
PBK.com
SAN LUIS OBISPO
1327 Archer Street, Suite 110
San Luis Obispo, CA 93401
805-529-3076

PDS
PocockDesignSolutions Inc.

FIRE STATION #44
COASTSIDE FIRE PROTECTION DISTRICT

501 STETSON STREET
MOSS BEACH, CA 94038

BID SET

KEY PLAN

PLAN NORTH | TRUE NORTH

REGISTERED PROFESSIONAL ENGINEER ANDREW R. DUSHAW No. M28639 Exp. 3/31/26 MECHANICAL STATE OF CALIFORNIA

CLIENT
COASTSIDE FIRE PROTECTION DISTRICT

PROJECT NUMBER
230137

DATE 3/13/2026

DRAWN BY: KF/OS CHKED BY: AD

REVISIONS

#	DESCRIPTION	DATE

This document is for plan review only

MECHANICAL DETAILS

M5.2

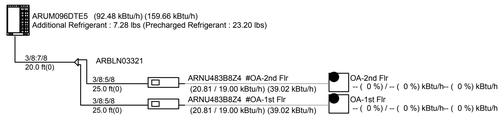

HRU-2 PIPING DIAGRAM

SCALE NONE | 4

Note :
Power wiring, breaker size, and disconnects should follow local code and NEC.
Multi-frame outdoor units require a separate power connection for each frame.
Refer to the most up-to-date submittal sheets for applicable electrical data.
.

- Power line(Outdoor unit)
- Power line(Indoor unit / HR unit)
- Communication line (ODU-IDU / ODU-ODU) : Twisted, Stranded and shielded AWG 18 x 2C
- Communication line (ODU-CEN) : Twisted, Stranded and shielded AWG 18 x 2C
- Communication line(Remote controller) : Twisted and stranded AWG 22 x 3C
  Ground shield wire at ODU only
  Note : Polarity matters: Always connect 'A' to 'A' and 'B' to 'B'

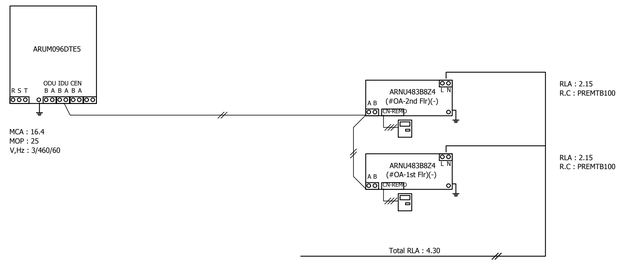

HRU-2 WIRING DIAGRAM

SCALE NONE | 3

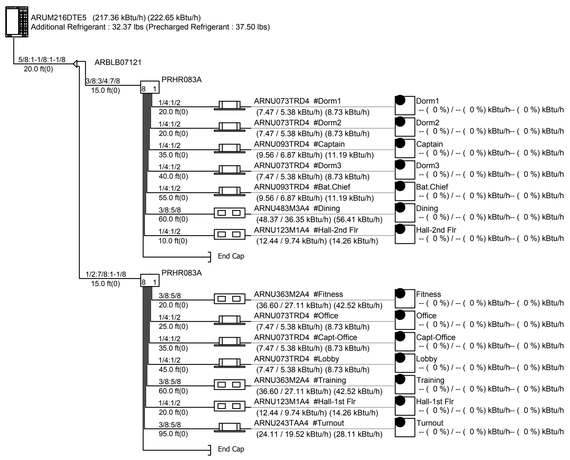

HRU-1 PIPING DIAGRAM

SCALE NONE | 2

Note :
Power wiring, breaker size, and disconnects should follow local code and NEC.
Multi-frame outdoor units require a separate power connection for each frame.
Refer to the most up-to-date submittal sheets for applicable electrical data.
.

- Power line(Outdoor unit)
- Power line(Indoor unit / HR unit)
- Communication line (ODU-IDU / ODU-ODU) : Twisted, Stranded and shielded AWG 18 x 2C
- Communication line (ODU-CEN) : Twisted, Stranded and shielded AWG 18 x 2C
- Communication line(Remote controller) : Twisted and stranded AWG 22 x 3C
  Ground shield wire at ODU only
  Note : Polarity matters: Always connect 'A' to 'A' and 'B' to 'B'

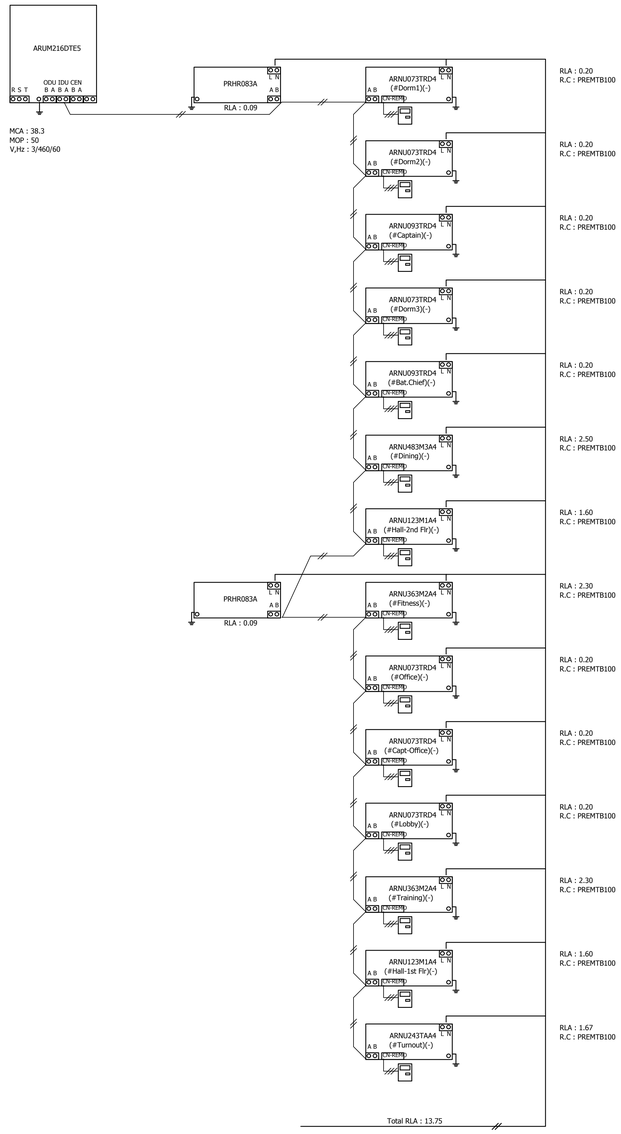

HRU-1 WIRING DIAGRAM

SCALE NONE | 1

Not for permitting or construction

PBK

ARCHITECT PBK Architects, Inc.
PBK.com
SAN LUIS OBISPO
1327 Archer Street, Suite 110
San Luis Obispo, CA 93401
805-529-3076

PDS
PocockDesignSolutions Inc.

FIRE STATION #44
COASTSIDE FIRE PROTECTION DISTRICT
501 STETSON STREET
MOSS BEACH, CA 94038
BID SET

BID SET

KEY PLAN
PLAN NORTH
TRUE NORTH

REGISTERED PROFESSIONAL ENGINEER
ANDREW R. DOSSEHAN
No. M39638
Exp. 3/31/26
MECHANICAL
STATE OF CALIFORNIA

CLIENT
COASTSIDE FIRE PROTECTION DISTRICT
PROJECT NUMBER
230137
DATE 3/13/2026
DRAWN BY: KF/OS CHKED BY: AD
REVISIONS

#	DESCRIPTION	DATE

MECHANICAL DETAILS

This document is for plan review only

M5.3

1/30/2025 4:24:54 PM

BUILDING ENERGY ANALYSIS REPORT

PROJECT:

Coastside Fire Station #44
502 Stetson Street
Moss Beach, CA 94038

Project Designer:

,

Report Prepared by:

,

Job Number:

Date:

2/6/2025

The EnergyPro computer program has been used to perform the calculations summarized in this compliance report. This program has approval and is authorized by the California Energy Commission for use with both the Residential and Nonresidential 2022 Building Energy Efficiency Standards.

This program developed by EnergySoft, LLC – www.energysoft.com.

TABLE OF CONTENTS

Cover Page	1
Table of Contents	2
Form NRCC/LMCC-PRF-E Certificate of Compliance	3

Project Name: Coastside FS 44 **Date Prepared:** 2025-02-06

A. General Information

1	Project Name	Coastside FS 44		
2	Run Title	Title 24 Analysis		
3	Project Location	502 Stetson Street		
4	City	Moss Beach	5	Standards Version	Compliance 2022
6	Zip code	94038	7	Compliance Software (version)	EnergyPro 9.3
8	Climate Zone	3	9	Building Orientation (deg)	0
10	Building Type(s)	• Nonresidential	11	Weather File	HAYWARD_STYP20.epw
12	Project Scope	• New envelope and mechanical	13	Number of Dwelling Units	0
14	Total Conditioned Floor Area in Scope (ft^2)	4245	15	Total # of hotel/motel rooms	0
16	Total Unconditioned Floor Area (ft^2)	100	17	Fuel Type	Natural gas
18	Nonresidential Conditioned Floor Area	4245	19	Total # of Stories (Habitable Above Grade)	1
20	Residential Conditioned Floor Area	0			

B. PROJECT SUMMARY

Table B shows which building components are included in the performance calculation. If indicated as not included, the project must show compliance prescriptively if within the permit application.

Building Components Complying via Performance					Building Components Complying Prescriptively	
Envelope (See Table G)	Nonres	Performance	Solar Thermal Water Heating (See Table I3)	☐ Performance	The following building components are ONLY eligible for prescriptive compliance and should be documented on the NRCC form listed if within the scope of the permit application (i.e. compliance will not be shown on the NRCC-PRF-E).	
	MultiFam	Not Included		☒ Not Included		
Mechanical (See Table H)	Nonres	Performance	Covered Process: Commercial Kitchens (see Table J)	☐ Performance	Indoor Lighting (Unconditioned) 140.6 & 170.2(e)	NRCC-LTI-E is required
	MultiFam	Not Included		☒ Not Included	Outdoor Lighting 140.7 & 170.2(e)	NRCC-LTO-E is required
Domestic Hot Water (See Table I)	Nonres	Not Included	Covered Process: Laboratory Exhaust (see Table J)	☐ Performance	Sign Lighting 140.8 & 170.2(e)	NRCC-LTS-E is required
	MultiFam	Not Included		☒ Not Included	**Building Components Complying with Mandatory Measures**	
Lighting (Indoor Conditioned, see Table K)	Nonres	Not Included	Photovoltaics (see Table F)	☐ Performance	Electrical power systems, commissioning, solar ready, elevator and escalator requirements are mandatory and should be documented on the NRCC form listed if applicable (i.e. compliance will not be shown on the NRCC-PRF-E.)	
	MultiFam	Not Included		☒ Not Included	Electrical Power Distribution 110.11	NRCC-ELC-E is required
			Battery (see Table F)	☐ Performance	Commissioning 120.8	NRCC-CXR-E is required
				☒ Not Included	Solar and Battery 110.10	NRCC-SAB-E is required

C1. COMPLIANCE SUMMARY

COMPLIES[1]	Time Dependent Valuaton (TDV)		Source Energy Use
	Efficiency[1] (kBtu/ft^2 - yr)	Total[2] (kBtu/ft^2 - yr)	Total[2] (kBtu/ft^2 - yr)
Standard Design	198.95	198.95	19.11
Proposed Design	144.11	144.11	14.77
Compliance Margins	**54.84**	**54.84**	**4.34**
	Pass	**Pass**	**Pass**

[1] *Efficiency measures include improvements like a better building envelope and more efficient equipment*
[2] *Compliance Totals include efficiency, photovoltaics and batteries*
[3] *New Construction, Complete Addition Scope: Building complies when all efficiency and total compliance margins are greater than or equal to zero and unmet load hour limits are not exceeded*
Existing, Addition and Alteration Scope: Building complies when efficiency compliance margin is greater than or equal to zero and unmet load hour limits are not exceeded

C2. TDV ENERGY COMPLIANCE RESULTS FOR PERFORMANCE COMPONENTS (Annual TDV Energy Use, kBtu/ft^2 - yr)

COMPLIES[2]			
Energy Component	Standard Design (TDV)	Proposed Design (TDV)	Compliance Margin (TDV)[1]
Space Heating	15.39	30.05	-14.66
Space Cooling	37.73	29.81	7.92
Indoor Fans	103.37	41.79	61.58
Heat Rejection	0	0	0
Pumps & Misc.	0	0	0
Domestic Hot Water	12.3	12.3	0
Indoor Lighting	30.16	30.16	0
Flexibility	---	---	---
EFFICIENCY COMPLIANCE TOTAL	**198.95**	**144.11**	**54.84 (27.6%)**
Photovoltaics	---	---	---
Batteries	---	---	---
TOTAL COMPLIANCE	**198.95**	**144.11**	**54.84 (27.6%)**

[1] *Notes: This number in parenthesis following the Compliance Margin in column 4, represents the Percent Better than Standard.*

C3. TDV ENERGY RESULTS FOR NON-REGULATED COMPONENTS[1]

Non-Regulated Energy Component	Standard Design (TDV)	Proposed Design (TDV)	Compliance Margin (TDV)[2]
Receptacle	61.04	61.04	---
Process	---	---	---
Other Ltg	0.53	0.53	---
Process Motors	---	---	---
TOTAL (TOTAL COMPLIANCE + NON-REGULATED COMPONENTS)	**260.52**	**205.68**	**54.84 (21.1%)**

[1] *Notes: This table is not used for Energy Code Compliance.*

C4. SOURCE ENERGY COMPLIANCE RESULTS FOR PERFORMANCE COMPONENTS (Annual SOURCE Energy Use, kBtu/ft^2 /yr)

COMPLIES[2]			
Energy Component	Standard Design (SOURCE)	Proposed Design (SOURCE)	Compliance Margin (SOURCE)[1]
Space Heating	2.18	4.34	-2.16
Space Cooling	1.52	1.07	0.45
Indoor Fans	9.88	3.83	6.05
Heat Rejection	0	0	0
Pumps & Misc.	0	0	0
Domestic Hot Water	3.18	3.18	0
Indoor Lighting	2.35	2.35	0
Flexibility	---	---	---
EFFICIENCY COMPLIANCE TOTAL	**19.11**	**14.77**	**4.34 (22.7%)**
Photovoltaics	---	---	---
Batteries	---	---	---
TOTAL COMPLIANCE	**19.11**	**14.77**	**4.34 (22.7%)**

[1] *Notes: This number in parenthesis following the Compliance Margin in column 4, represents the Percent Better than Standard.*

C5. SOURCE ENERGY RESULTS FOR NON-REGULATED COMPONENTS[1]

Non-Regulated Energy Component	Standard Design (SOURCE)	Proposed Design (SOURCE)	Compliance Margin (SOURCE)[1]
Receptacle	4.51	4.51	---
Process	---	---	---
Other Ltg	0.04	0.04	---
Process Motors	---	---	---
TOTAL (TOTAL COMPLIANCE + NON-REGULATED COMPONENTS)	**23.66**	**19.32**	**4.34 (18.3%)**

[1] *Notes: This table is not used for Energy Code Compliance.*

C6. "ABOVE CODE" QUALIFICATIONS

☐ This project is pursuing CalGreen Tier 1 ☐ This project is pursuing CalGreen Tier 2

C7. ENERGY USE SUMMARY

Energy Component	Standard Design Site (MWh)	Proposed Design Site (MWh)	Margin (MWh)	Standard Design Site (MBtu)	Proposed Design Site (MBtu)	Margin (MBtu)
Space Heating	2.2	4.2	-2	---	---	---
Space Cooling	4.8	3.7	1.1	---	---	---
Indoor Fans	15.3	6	9.3	---	---	---
Heat Rejection	---	---	---	---	---	---
Pumps & Misc.	---	---	---	---	---	---
Domestic Hot Water	0.8	0.8	0	12.5	12.5	0
Indoor Lighting	5.2	5.2	0	---	---	---
Flexibility	---	---	---	---	---	---
EFFICIENCY TOTAL	**28.3**	**19.9**	**8.4**	**12.5**	**12.5**	**0**
Photovoltaics	---	---	---	---	---	---
Batteries	---	---	---	---	---	---
ENERGY USE SUBTOTAL	**28.3**	**19.9**	**8.4**	**12.5**	**12.5**	**0**
Receptacle	10.9	10.9	0	---	---	---
Process	---	---	---	---	---	---
Other Ltg	0.1	0.1	0	---	---	---
Process Motors	---	---	---	---	---	---
ENERGY USE TOTAL	**39.3**	**30.9**	**8.4**	**12.5**	**12.5**	**0**

C8. ENERGY USE INTENSITY (EUI)

	Standard Design (kBtu/ft^2 / yr)	Proposed Design (kBtu/ft^2 / yr)	Margin (kBtu/ft^2 / yr)	Margin Percentage
GROSS EUI[1]	33.74	27.14	6.6	19.56
NET EUI[2]	33.74	27.14	6.6	19.56

[1] *Notes: Gross EUI is Energy Use Total (not including PV)/Total Building Area. Net EUI is Energy Use Total (including PV)/Total Building Area.*

D1. EXCEPTIONAL CONDITIONS

• The project uses the Simplified Geometry Performance Modeling Approach which is not capable of modeling daylighting controls and assumes the prescriptive Secondary Daylit Control requirements are met. PRESCRIPTIVE COMPLIANCE documentation (form NRCC-LTI-02-E) for the requirements of section 140.6(d) Automatic Daylighting Controls in Secondary Daylit Zones is required.
• The building does not include service water heating. Verify that service water heating is not required and is not included in the design.
• The user model includes space(s) that are designed to be served by mechanical cooling systems, but the cooling systems were not included in the simulation model. A cooling system has been modeled for both the proposed and standard cases.
• The user model includes space(s) without sufficient cooling equipment. Cooling equipment has been added to the model to meet cooling loads.
• Project is claiming Exception 2 to Section 140.10(a): No PV system is required where the required PV system size is less than 4 kWdc.
• PV/Battery Building Type has been modified from software defaults for one or more spaces. Review project's PV/Battery Building Type(s) with documentation author. Refer to Energy Code section 140.10 for Nonresidential or 170.2(g) for more information.

G1. ENVELOPE GENERAL INFORMATION (conditioned spaces only)

01	02	03	04
Opaque Surfaces & Orientation	**Total Gross Surface Area (ft^2)**	**Total Fenestration Area (ft^2)**	**Window to Wall Ratio (%)**
North-Facing[1]	1125	227	20.18
East-Facing[2]	200	18	9

Notes
[1]*North-Facing is oriented to within 45 degrees of true north, including 45 00'00" east of north (NE), but excluding 45 00'00" west of north (NW),*
[2]*East-Facing is oriented to within 45 degrees of true east, including 45 00'00" south of east (SE), but excluding 45 00'00" north of east (NE),*
[3]*South-Facing is oriented to within 45 degrees of true south, including 45 00'00" west of south (SW), but excluding 45 00'00" east of south (SE),*
[4]*West-Facing is oriented to within 45 degrees of true west, including 45 00'00" north of west (NW), but excluding 45 00'00" south of west (SW),*

G1. ENVELOPE GENERAL INFORMATION (conditioned spaces only)

01	02	03	04
Opaque Surfaces & Orientation	**Total Gross Surface Area (ft^2)**	**Total Fenestration Area (ft^2)**	**Window to Wall Ratio (%)**
South-Facing[1]	680	142	20.88
West-Facing[2]	905	210	23.2
Total	**2910**	**597**	**20.52**
Roof	2185	0	0

Notes
[1]*North-Facing is oriented to within 45 degrees of true north, including 45 00'00" east of north (NE), but excluding 45 00'00" west of north (NW),*
[2]*East-Facing is oriented to within 45 degrees of true east, including 45 00'00" south of east (SE), but excluding 45 00'00" north of east (NE),*
[3]*South-Facing is oriented to within 45 degrees of true south, including 45 00'00" west of south (SW), but excluding 45 00'00" east of south (SE),*
[4]*West-Facing is oriented to within 45 degrees of true west, including 45 00'00" north of west (NW), but excluding 45 00'00" south of west (SW),*

G4. NONRESIDENTIAL AIR BARRIER

01	02
Building Story Name	**Air Barrier**
Com-Floor 1	No air barrier

1/30/2025 4:24:54 PM

Not for permitting or construction

PBK
ARCHITECT PBK Architects, Inc.
PBK.com
SAN LUIS OBISPO
1327 Archer Street, Suite 110
San Luis Obispo, CA 93401
805-529-3076

PDS
PocockDesignSolutions Inc.

FIRE STATION #44
COASTSIDE FIRE PROTECTION DISTRICT
501 STETSON STREET
MOSS BEACH, CA 94038
BID SET

BID SET

KEY PLAN
PLAN NORTH
TRUE NORTH

REGISTERED PROFESSIONAL ENGINEER ANDREW R. GUSSMAN No. M39828 Exp. 3/31/26 MECHANICAL STATE OF CALIFORNIA

CLIENT
COASTSIDE FIRE PROTECTION DISTRICT
PROJECT NUMBER
230137
DATE 3/13/2026
DRAWN BY: KF/OS CHKED BY: AD
REVISIONS

#	DESCRIPTION	DATE

This document is for plan review only

TITLE 24
COMPLIANCE FORMS

M5.4

CERTIFICATE OF COMPLIANCE - NONRESIDENTIAL PERFORMANCE COMPLIANCE METHOD NRCC-PRF-E

Nonresidential Performance Compliance Method (Page 11 of 19)

G5. OPAQUE SURFACE ASSEMBLY SUMMARY

01	02	03	04	05	06		07	08	09	10
Surface Name	Construction Type	Area (ft^2)	Framing Type	Cavity R-Value	Continuous R-Value		Units	Value	Description of Assembly Layers	Status[1]
					Interior	Exterior				
Shear Wall7	Exterior Wall	250	N/A	0	N/A	13.93	U-factor	0.0606	Gypsum Board - 5/8 in. Concrete - 140 lb/ft3 - 8 in. Cellular polyisocyanurate (unfaced) - 1/2 in. R2.9 Gypsum Board - 5/8 in. Glass fiber batt - 3 1/2 in. R11 (CEC Default)	N
R-19 Wall10	Exterior Wall	2,640	Wood	19	N/A	N/A	U-factor	0.0723	Stucco - 7/8 in. Vapor permeable felt - 1/8 in. Composite-1 Gypsum Board - 1/2 in.	N
Slab On Grade14	Underground Floor	2,260	N/A	0	N/A	N/A	F-factor	0.73	Slab Type =Unheated slab on grade Insulation Orientation =None Insulation R-Value =none	N
R-13 Wall22	Interior Wall	600	Wood	11	N/A	2.93	U-factor	0.0765	Stucco - 7/8 in. Cellular polyisocyanurate (unfaced) - 1/2 in. R2.9 Vapor permeable felt - 1/8 in. Composite-2 Gypsum Board - 1/2 in.	N
R-11 Floor No Crawlspace57	Exterior Floor	2,085	Wood	11	N/A	N/A	U-factor	0.0701	Composite-3 Plywood - 1/2 in. Carpet - 3/4 in.	N
R-19 Metal Roof No Attic59	Roof	2,085	N/A	19	N/A	N/A	U-factor	0.082	Metal Standing Seam - 1/16 in. Composite-4	N

[1] *Status: N - New, A - Altered, E - Existing*

CERTIFICATE OF COMPLIANCE - NONRESIDENTIAL PERFORMANCE COMPLIANCE METHOD NRCC-PRF-E

Nonresidential Performance Compliance Method (Page 12 of 19)

G5. OPAQUE SURFACE ASSEMBLY SUMMARY

01	02	03	04	05	06		07	08	09	10
Surface Name	Construction Type	Area (ft^2)	Framing Type	Cavity R-Value	Continuous R-Value		Units	Value	Description of Assembly Layers	Status[1]
					Interior	Exterior				
R-30 Roof No Attic91	Roof	200	Wood	30	N/A	N/A	U-factor	0.034	AsphaltShingle0_25in Vapor permeable felt - 1/8 in. Plywood - 1/2 in. Air - Cavity - Wall Roof Ceiling - 4 in. or more Composite-5 Gypsum Board - 1/2 in.	N
R-13 Wall221	Exterior Wall	220	Wood	11	N/A	2.93	U-factor	0.08	Stucco - 7/8 in. Cellular polyisocyanurate (unfaced) - 1/2 in. R2.9 Vapor permeable felt - 1/8 in. Composite-2 Gypsum Board - 1/2 in.	N

[1] *Status: N - New, A - Altered, E - Existing*

G7A. FENESTRATION ASSEMBLY SUMMARY (NONRESIDENTIAL)

01	02	03	04	05	06	07	08	09
Fenestration Assembly Name	Fenestration Type/ Product Type / Frame Type	Certification Method[2]	Assembly Method	Area (ft^2)	Overall U-factor	Overall SHGC	Overall VT	Status[3]
Residential Cooling	Vertical fenestration Fixed window N/A	NFRC	Manufactured	597	0.35	0.25	0.5	N

[1] *Notes: Newly installed fenestration shall have a certified NFRC Label Certificate or use the CEC default tables found in Table 110.6-A and Table 110.6-B. Center of Glass (COG) values are for the glass-only, determined by the manufacturer, and are shown for ease of verification. Site-built fenestration values are calculated per Nonresidential Appendix NA6 and are used in the analysis.*

[2] *Status: N - New, A - Altered, E - Existing*

CERTIFICATE OF COMPLIANCE - NONRESIDENTIAL PERFORMANCE COMPLIANCE METHOD NRCC-PRF-E

Nonresidential Performance Compliance Method (Page 13 of 19)

H1. DRY SYSTEM EQUIPMENT (FURNACES, AIR HANDLING UNITS, HEAT PUMPS, VRF, ECONOMIZERS ETC.)

01	02	03	04	05	06	07	08	09	10	11	12
Equipment Name	Equipment Type	Qty	Heating				Cooling				Status[1]
			Total Heating Output (kBtu/h)	Supp Heat Output (kBtu/h)	Efficiency Unit	Efficiency	Total Cooling Output (kBtu/h)	Efficiency Unit	Efficiency	Economizer Type (if present)	
HRU-1	Variable Refrigerant Flow	1	243	N/A	COP	4.2	216	EER	15	N/A	N
HRU-2	Variable Refrigerant Flow	1	108	N/A	COP	4.2	96	EER	15	N/A	N

[1] *Status: N - New, A - Altered, E - Existing*

CERTIFICATE OF COMPLIANCE - NONRESIDENTIAL PERFORMANCE COMPLIANCE METHOD NRCC-PRF-E

Nonresidential Performance Compliance Method (Page 14 of 19)

H3. NONRESIDENTIAL / COMMON USE AREA FAN SYSTEMS SUMMARY

01	02	03	04	05	06	07	08	09	10	11	12	13
Name or Item Tag	Qty	Design OA CFM	Supply Fan				Return / Relief Fan					Status[1]
			CFM	Power	Power Units	Control	Fan Type	CFM	Power	Power Units	Control	
2-FC/1-1-VRF	1	76.5	1,050	0.21	BHP	VSD	N/A	N/A	N/A	N/A	N/A	N
3-FC/1-2-VRF	1	15	265	0.01	BHP	VSD	N/A	N/A	N/A	N/A	N/A	N
4-FC/1-3-VRF	1	15	265	0.01	BHP	VSD	N/A	N/A	N/A	N/A	N/A	N
5-FC/1-4-VRF	1	15	265	0.01	BHP	VSD	N/A	N/A	N/A	N/A	N/A	N
6-FC/1-5-VRF	1	67.5	400	0.16	BHP	VSD	N/A	N/A	N/A	N/A	N/A	N
7-FC/1-6-VRF	1	190	1,050	0.21	BHP	VSD	N/A	N/A	N/A	N/A	N/A	N
8-FC/1-7-VRF	1	240	810	0.1	BHP	VSD	N/A	N/A	N/A	N/A	N/A	N
9-FC/2-1-VRF	1	18	265	0.01	BHP	VSD	N/A	N/A	N/A	N/A	N/A	N
10-FC/2-2-VRF	1	18	265	0.01	BHP	VSD	N/A	N/A	N/A	N/A	N/A	N
11-FC/2-3-VRF	1	29.25	285	0.02	BHP	VSD	N/A	N/A	N/A	N/A	N/A	N
12-FC/2-4-VRF	1	18	265	0.01	BHP	VSD	N/A	N/A	N/A	N/A	N/A	N
13-FC/2-5-VRF	1	16.5	285	0.02	BHP	VSD	N/A	N/A	N/A	N/A	N/A	N
14-FC/2-6-VRF	1	78	400	0.16	BHP	VSD	N/A	N/A	N/A	N/A	N/A	N
15-FC/2-7-VRF	1	135	1,500	0.2	BHP	VSD	N/A	N/A	N/A	N/A	N/A	N
16-First Flr OSA-VRF	1	0	500	0.21	BHP	Constant Vol	N/A	N/A	N/A	N/A	N/A	N

[1] *Status: N - New, A - Altered, E - Existing*

H5. GENERAL EXHAUST FAN SUMMARY

01	02	03	04	05	06	07	08
System ID	Zone Name	Qty	CFM	Power	Power Units	Continuous Operation?	Status[1]
FC/1-11-EF	1-FC/1-1	1	200	0.05	BHP	No	N
FC/1-749-EF	7-FC/1-7	1	300	0.1	BHP	No	N

[1] *Status: N - New, A - Altered, E - Existing*

CERTIFICATE OF COMPLIANCE - NONRESIDENTIAL PERFORMANCE COMPLIANCE METHOD NRCC-PRF-E

Nonresidential Performance Compliance Method (Page 15 of 19)

H8. SYSTEM SPECIAL FEATURES

01	02	03	04
System Name	Equipment Type	Interlocks per 140.4(o)[1]	Other Special Features and Controls
HRU-1	Variable Refrigerant Flow	N/A	Heat Recovery
HRU-2	Variable Refrigerant Flow	N/A	Heat Recovery

Notes: This table includes controls related to the performance path only. For projects using the prescriptive path, mandatory and prescriptive controls requirements are documented on the NRCC-MCH-E.

[1] *Yes = interlocks are provided, No = interlocks are not provided, NA means no operable openings.*

H9. NONRESIDENTIAL / COMMON USE AREA & HOTEL/MOTEL VENTILATION

01	02	03	04	05	06	07
Zone Name	Mechanical Ventilation				Conditioned Area (sf)	DCV or Occupant Sensor Controls, or Both
	Ventilation Function	# of People	Supply OA CFM	Exhaust CFM		
1-FC/1-1	Sports/Entertainment - Health club/weight rooms	5.1	76.5	200	510	N/A
2-FC/1-2	Office - Office space	0.5	15	0	100	N/A
3-FC/1-3	Office - Office space	0.5	15	0	100	N/A
4-FC/1-4	Misc - Banks or bank lobbies	3.33	15	0	100	N/A
5-FC/1-5	General - Corridors	2.25	67.5	0	450	N/A
6-FC/1-6	Education - Lecture/postsecondary classroom	12.5	190	0	500	N/A
7-FC/1-7	Exhaust - All other locker rooms	3	240	300	300	N/A
8-FC/2-1	Office - Office space	0.6	18	0	120	N/A
9-FC/2-2	Office - Office space	0.6	18	0	120	N/A
10-FC/2-3	Office - Office space	0.97	29.25	0	195	N/A

CERTIFICATE OF COMPLIANCE - NONRESIDENTIAL PERFORMANCE COMPLIANCE METHOD NRCC-PRF-E

Nonresidential Performance Compliance Method (Page 16 of 19)

H9. NONRESIDENTIAL / COMMON USE AREA & HOTEL/MOTEL VENTILATION

01	02	03	04	05	06	07
Zone Name	Mechanical Ventilation				Conditioned Area (sf)	DCV or Occupant Sensor Controls, or Both
	Ventilation Function	# of People	Supply OA CFM	Exhaust CFM		
11-FC/2-4	Office - Office space	0.6	18	0	120	N/A
12-FC/2-5	Office - Office space	0.55	16.5	0	110	N/A
13-FC/2-6	General - Corridors	2.6	78	0	520	N/A
14-FC/2-7	Office - Office space	4.5	135	0	900	N/A
15-First Flr OSA	General - Unoccupied	0.5	0	0	100	N/A

H11. ZONAL SYSTEM AND TERMINAL UNIT SUMMARY

01	02	03	04	05	06	07	08	09	10	11	12
System ID	System Type	Qty	Rated Capacity (kBtu/h)		Airflow (cfm)			Fan			VSD
			Heating	Cooling	Design	Min.	Min. Ratio	Power	Power Units	Cycles	
2-FC/1-1-VRF	Variable Refrigerant Flow	1	40.6	36.2	1,050	200	0.19	0.21	BHP	Continuous	☒
3-FC/1-2-VRF	Variable Refrigerant Flow	1	8.5	7.5	265	20	0.08	0.01	BHP	Continuous	☒
4-FC/1-3-VRF	Variable Refrigerant Flow	1	8.5	7.5	265	20	0.08	0.01	BHP	Continuous	☒
5-FC/1-4-VRF	Variable Refrigerant Flow	1	8.5	7.5	265	20	0.08	0.01	BHP	Continuous	☒
6-FC/1-5-VRF	Variable Refrigerant Flow	1	13.6	12.3	400	75	0.19	0.16	BHP	Continuous	☒
7-FC/1-6-VRF	Variable Refrigerant Flow	1	40.6	36.2	1,050	200	0.19	0.21	BHP	Continuous	☒
8-FC/1-7-VRF	Variable Refrigerant Flow	1	25.6	24.3	810	50	0.06	0.1	BHP	Continuous	☒
9-FC/2-1-VRF	Variable Refrigerant Flow	1	8.5	7.5	265	20	0.08	0.01	BHP	Continuous	☒
10-FC/2-2-VRF	Variable Refrigerant Flow	1	8.5	7.5	265	20	0.08	0.01	BHP	Continuous	☒
11-FC/2-3-VRF	Variable Refrigerant Flow	1	10.9	9.6	285	20	0.07	0.02	BHP	Continuous	☒
12-FC/2-4-VRF	Variable Refrigerant Flow	1	8.5	7.5	265	20	0.08	0.01	BHP	Continuous	☒
13-FC/2-5-VRF	Variable Refrigerant Flow	1	10.9	9.6	285	20	0.07	0.02	BHP	Continuous	☒
14-FC/2-6-VRF	Variable Refrigerant Flow	1	13.6	12.3	400	75	0.19	0.16	BHP	Continuous	☒
15-FC/2-7-VRF	Variable Refrigerant Flow	1	52.2	48.1	1,500	175	0.12	0.2	BHP	Continuous	☒

CERTIFICATE OF COMPLIANCE - NONRESIDENTIAL PERFORMANCE COMPLIANCE METHOD NRCC-PRF-E

Nonresidential Performance Compliance Method (Page 17 of 19)

H11. ZONAL SYSTEM AND TERMINAL UNIT SUMMARY

01	02	03	04	05	06	07	08	09	10	11	12
System ID	System Type	Qty	Rated Capacity (kBtu/h)		Airflow (cfm)			Fan			VSD
			Heating	Cooling	Design	Min.	Min. Ratio	Power	Power Units	Cycles	
16-First Flr OSA-VRF	Variable Refrigerant Flow	1	39	24	500	N/A	N/A	0.21	BHP	Continuous	☐
PropNoClg-NonResZrSys	Single Zone Air Conditioner	1	0	4.24	132.5	N/A	N/A	0	W/cfm	Cycling	☐
PropNoClg-NonResZrSys-2	Single Zone Air Conditioner	1	0	13.43	436.38	N/A	N/A	0	W/cfm	Cycling	☐
PropNoClg-NonResZrSys-3	Single Zone Air Conditioner	1	0	3.47	113.23	N/A	N/A	0	W/cfm	Cycling	☐
PropNoClg-NonResZrSys-4	Single Zone Air Conditioner	1	0	3.91	127.63	N/A	N/A	0	W/cfm	Cycling	☐
PropNoClg-NonResZrSys-5	Single Zone Air Conditioner	1	0	7.04	229.56	N/A	N/A	0	W/cfm	Cycling	☐
PropNoClg-NonResZrSys-6	Single Zone Air Conditioner	1	0	3.47	113.24	N/A	N/A	0	W/cfm	Cycling	☐
PropNoClg-NonResZrSys-7	Single Zone Air Conditioner	1	0	6.51	212.43	N/A	N/A	0	W/cfm	Cycling	☐
PropNoClg-NonResZrSys-8	Single Zone Air Conditioner	1	0	34.18	1,115.03	N/A	N/A	0	W/cfm	Cycling	☐

I. DECLARATION OF REQUIRED CERTIFICATES OF INSTALLATION

Selections made by Documentation Author indicate which Certificates of Installation must be submitted for the features to be recognized for compliance. These documents must be retained and provided to the building inspector during construction and can be found online

Building Component	Form/Title
Envelope	NRCI-ENV-01-E - Must be submitted for all buildings
Envelope	NRCI-ENV-E - Envelope (for all buildings)
Mechanical	NRCI-MCH-01-E - Must be submitted for all buildings
Mechanical	NRCI-MCH-E - For all buildings with Mechanical Systems

M. DECLARATION OF REQUIRED CERTIFICATES OF ACCEPTANCE

Selections made by Documentation Author indicate which Certificates of Acceptance must be submitted for the features to be recognized for compliance. These documents must be provided to the building inspector during construction and must be completed through an Acceptance Test Technician Certification Provider (ATTCP).

Building Component	Form/Title & System Name(s)
Envelope	NRCA-ENV-02-F - NRFC label verification for fenestration

CERTIFICATE OF COMPLIANCE - NONRESIDENTIAL PERFORMANCE COMPLIANCE METHOD NRCC-PRF-E

Nonresidential Performance Compliance Method (Page 18 of 19)

N. DECLARATION OF REQUIRED CERTIFICATES OF VERIFICATION

Selections made by Documentation Author indicate which Certificates of Verification must be submitted for the features to be recognized for compliance. These documents must be retained and provided to the building inspector during construction and can be found online

There are no Certificates of Verification applicable to this project

CERTIFICATE OF COMPLIANCE - NONRESIDENTIAL PERFORMANCE COMPLIANCE METHOD NRCC-PRF-E

Nonresidential Performance Compliance Method (Page 19 of 19)

Documentation Author's Declaration Statement

I. I certify that this Certificate of Compliance documentation is accurate and complete.

Documentation Author Name: Andrew Gossman	Documentation Author Signature:
Company: Pocock Design Solutions	Signature Date:
Address: 14451 Chambers Road, Suite 210	CEA/HERS Certification Identification (if applicable):
City/State/Zip: , Tustin, CA 92780	Phone: 949-417-3903

Responsible Person's Declaration statement

I certify the following under penalty of perjury, under the laws of the State of California:

1. The information provided on this Certificate of Compliance is true and correct.
2. I am eligible under Division 3 of the Business and Professions Code to accept responsibility for the building design or system design identified on this Certificate of Compliance (responsible designer)
3. The energy features and performance specifications, materials, components, and manufactured devices for the building design or system design identified on this Certificate of Compliance conform to the requirements of Title 24, Part 1 and Part 6 of the California Code of Regulations.
4. The building design features or system design features identified on this Certificate of Compliance are consistent with the information provided on other applicable compliance documents, worksheets, calculations, plans and specifications submitted to the enforcement agency for approval with this building permit application.
5. I understand that a registered copy of this Certificate of Compliance shall be made available with the building permit(s) issued for the building, and made available to the enforcement agency for all applicable inspections, and I will take the necessary steps to accomplish this requirement.
6. I understand that a registered copy of this Certificate of Compliance is required to be included with the documentation the builder provides to the building owner at occupancy, and I will take the necessary steps to accomplish these requirements.

Responsible Designer Name: Andrew Gossman	Responsible Designer Signature:
Company: Pocock Design Solutions	
Address: 14451 Chambers Road, Suite 210	Date Signed: 2/7/2025
City/State/Zip: Tustin, CA 92780	License #: M35839
Phone: 949-417-3903	Title: Scope:

1/30/2025 4:24:54 PM

Not for permitting or construction

PBK
ARCHITECT PBK Architects, Inc.
PBK.com
SAN LUIS OBISPO
1327 Archer Street, Suite 110
San Luis Obispo, CA 93401
805-529-3076

PDS
PocockDesignSolutions Inc.

FIRE STATION #44
COASTSIDE FIRE PROTECTION DISTRICT
501 STETSON STREET
MOSS BEACH, CA 94038
BID SET

BID SET

KEY PLAN
PLAN NORTH
TRUE NORTH

REGISTERED PROFESSIONAL ENGINEER
ANDREW R. GOSSMAN
No. M35839
Exp. 3-31-26
MECHANICAL
STATE OF CALIFORNIA

CLIENT
COASTSIDE FIRE PROTECTION DISTRICT
PROJECT NUMBER
230137
DATE 3/13/2026
DRAWN BY: KF/OS CHKED BY: AD
REVISIONS

#	DESCRIPTION	DATE

This document is for plan review only

TITLE 24
COMPLIANCE FORMS

M5.5

GAS WATER HEATER SCHEDULE

ITEM	MANUFACTURER	MODEL NO.	SERVICE	LOCATION	STORAGE	INPUT BTU/HR	RECOVERY CAPACITY @ 60°F	INLET TEMP °F	OUTLET TEMPER °F	OPER. WT. LBS.	REMARKS
WH 1	A.O. SMITH	BTH-150	DOMESTIC HOT WATER	SEE PLANS	100 GALLONS	150,000	297 GPH	60	120	1387 LBS.	MUST HAVE ASHRAE STICKER OR OTHERWISE COMPLY WITH TITLE 24 REQUIREMENT FOR SERVICE WATER HEATERS.

PUMP SCHEDULE

ITEM	MANUFACTURER	MODEL NO.	SERVICE	LOCATION	STORAGE	CAPACITY		MOTOR					REMARKS
						GPM	HEAD	HORSE POWER	VOLT	PHASE	CYCLE	R.P.M.	
CP 1	GRUNDFOS	"UP" SERIES	HOT WATER RETURN	SEE PLANS	CENTRIFUGAL	2	8	1/25	115	1	60	1750	PROVIDED WITH BUILT-IN OVERLOAD.

GENERAL NOTES

1. BEFORE COMMENCEMENT OF WORK, THE CONTRACTOR SHALL VERIFY THE EXACT LOCATIONS, ELEVATIONS AND CHARACTERISTICS OF ALL UTILITIES AND PIPING, AND SHALL IMMEDIATELY NOTIFY THE ARCHITECT OF ANY DISCREPANCIES.
2. ALL ACCESSIBLE WATER CLOSETS SHALL HAVE FLUSH VALVE WITH HANDLE ON OPEN SIDE.
3. ALL VALVES, UNIONS, ETC. TO BE SAME SIZE AS PIPE UNLESS OTHERWISE INDICATED ON DRAWINGS.
4. ALL PLUMBING FIXTURE VENTS TO TERMINATE A MINIMUM OF 12 INCHES FROM ANY VERTICAL SURFACE AND 10 FEET FROM ANY OUTSIDE AIR INTAKES.
5. EXACT LOCATIONS AND MOUNTING HEIGHTS OF PLUMBING FIXTURES SHALL BE OBTAINED FROM THE ARCHITECTURAL DRAWINGS.
6. ALL EXTERIOR GAS COCKS, WATER SHUT OFF VALVES AND/OR SEWER CLEANOUTS BELOW GROUND SHALL BE INSTALLED IN YARD BOXES WITH THE COVERS CONSPICUOUSLY MARKED "GAS", "WATER", AND "SEWER" RESPECTIVELY.
7. CONNECTION BETWEEN INCOMPATIBLE MATERIALS ABOVE GRADE AND INSIDE BUILDING SHALL BE MADE WITH TWO (2) DIELECTRIC UNIONS SEPARATED BY A TWELVE INCH (12") SECTION OF RED BRASS PIPE.
8. ALL CLEANOUTS SHALL BE INSTALLED WHERE READILY ACCESSIBLE. ALL URNINALS SHALL HAVE CLEANOUTS ABOVE FIXTURE, CPC 707.4. THE CONTRACTOR SHALL COORDINATE ALL CLEANOUT LOCATIONS WITH EQUIPMENT, CABINETS, ETC., AND THE ARCHITECT PRIOR TO ANY INSTALLATION.
9. ALL URINALS SHALL HAVE CLEANOUTS ABOVE FIXTURE, PER CPC 707.4. THE CONTRACTOR SHALL COORDINATE ALL CLEANOUT LOCATIONS WITH THE ARCHITECT PRIOR TO ANY INSTALLATION.
10. CORROSION PROTECTION SHALL BE PROVIDED FOR ALL BELOW GRADE CAST IRON AND COPPER PIPING AND ASSOCIATED VALVES AND FITTINGS. SUCH PIPING SHALL BE PROTECTED FROM CORROSION BY ENCASEMENT IN A POLYETHYLENE PROTECTIVE WRAPPING, REFERRED TO HEREAFTER AS POLYWRAP. ALTHOUGH NOT INTENDED TO BE A COMPLETELY AIR AND WATER TIGHT ENCLOSURE, THE POLYWRAP SHALL PROVIDE A CONTINUOUS BARRIER BETWEEN THE PIPE AND SURROUNDING BEDDING AND BACKFILL. SEE SPECS 221316 SECTION 2.4 CORROSION PROTECTION.
11. SEE ARCHITECTURAL DRAWINGS FOR ACCESSIBLE FIXTURE LOCATIONS AND MOUNTING HEIGHTS. INSULATE ALL EXPOSED HOT WATER AND DRAIN PIPING BELOW ACCESSIBLE LAVATORIES AND SINKS.
12. ALL PLUMBING WORK SHALL BE INSTALLED SO AS TO AVOID INTERFERENCE WITH ELECTRICAL AND MECHANICAL EQUIPMENT AND STRUCTURAL FRAMING.
13. ALL WORK AND MATERIAL SHALL BE PERFORMED AND INSTALLED IN COMPLIANCE WITH CALIFORNIA PLUMBING CODE 2022.
14. THESE DRAWINGS INDICATE THE SEWER, WATER, AND STORM DRAIN SYSTEMS TO POINT OF CONNECTION 5'-0" OUTSIDE OF THE BUILDING. CONTINUATION OF THESE SYSTEMS IS SHOWN ON THE CIVIL DRAWINGS AND IS SPECIFIED UNDER ANOTHER SECTION OF THE SPECIFICATIONS. THE PIPING SHALL BE INSTALLED TO MEET THE INVERT ELEVATIONS SHOWN ON THE CIVIL DRAWINGS.
15. INSULATION (SEE SPECIFICATION FOR TYPE REQUIRED) AND COVERING ON PIPE AND TUBING SHALL HAVE A FLAME SPREAD RATING NOT TO EXCEED 25 AND A SMOKE DENSITY NOT TO EXCEED 450 WHEN TESTED IN ACCORDANCE WITH 2022 C.B.C. SECTION 720.3.
16. MATERIALS EXPOSED WITHIN DUCTS OR PLENUMS SHALL HAVE A FLAME-SPREAD INDEX OF NOT MORE THAN 25 AND A SMOKE-DEVELOPED INDEX OF NOT MORE THAN 50 WHERE TESTED IN ACCORDANCE WITH ASTM E84 OR UL 723. CMC 2022, CHAPTERS 7, 9 ,& 11.
17. THE BUILDING SHALL BE PROVIDED WITH AN AUTOMATIC SPRINKLER SYSTEM PER C.B.C. CHAPTER 9 SECTION 903 & NFPA 13, ALL LOCAL CODES, AND INSURANCE UNDERWRITERS REQUIREMENTS. THE FIRE SPRINKLER CONTRACTOR SHALL SUBMIT AN APPROVED AND STAMPED SET OF DRAWINGS SHOWING ALL SIZES AND LOCATIONS OF FIRE SPRINKLER RISER, PIPING, DETECTOR CHECK VALVE AND ANY OTHER EQUIPMENT REQUIRED. IN ADDITION, SUBMITTAL SHALL BE MADE FOR ALL MATERIAL AND EQUIPMENT.
18. PROVIDE A WATER HAMMER ARRESTOR FOR FLUSH VALVE PER 2022 CPC 609.10.
19. ALL EQUIPMENT SHALL BE LATERALLY SUPPORTED IN ALL DIRECTIONS TO RESIST A MIN. OF 20% OF THE EQUIPMENT'S OPERATING WEIGHT.
20. ALL SIZING FOR WASTE, VENTS, WATER AND GAS SHALL BE IN COMPLIANCE WITH TABLES IN THE CALIFORNIA PLUMBING CODE 2022.

WATER CALCULATION

STREET PRESSURE: STATIC = 75 PSI
RESIDUAL = 60 PSI
TOTAL DEMAND FOR BUILDING: 84.5 FIXTURE UNITS = 64 GPM
RESIDUAL PRESSURE (FLUSH VALVE WATER CLOSET) = 30 PSI
STATIC HEIGHT 17' X .433 = 7.36 PSI
2" BACKFLOW PREVENTER = 13 PSI
2" WATER METER = 1.7 PSI
SUB TOTAL = 52 PSI

RESIDUAL = 60 PSI
SUB TOTAL = 52 PSI
TOTAL = 8 PSI

AVAILABLE FOR LINE LOSS = 8 PSI
ALLOWABLE FRICTION LOSS PER 100 FEET OF PIPE
DEVELOPMENT LENGTH = 250 FEET
EQUIVALENT LENGTH = 325 FEET (30 % FOR FITTINGS)

$\frac{8.0 \text{ PSI} \times 100}{325}$ = 2.5 PSI/100 FEET DESIGN FOR 2.5 PSI

DESIGN PIPE SIZES ON 2.5 PSI/100 FEET
AT MAXIMUM VELOCITY 8 FPS

SIZES TABLE

PIPE SIZES	GPM	(FT) F.U.	(FV) F.U.	VELOCITY
1/2"	1.9	0	0	2.6
3/4"	4.9	5	0	3.2
1"	10.0	12	0	3.9
1 1/4"	17.4	22	0	4.4
1 1/2"	27.0	42	8	4.9
2"	56.5	132	51	5.9
2 1/2"	100	331	200	6.7
3"	160	611	521	7.5

SAND INTERCEPTOR CALC.

ESTIMATE WATER USAGE 2 HOSE BIBS @ 3 GPM = 6 GPM

ESTIMATED WATER USAGE PER HOUR = 360 GPH
ESTIMATED HOURS OF USAGE PER DAY = 1 HR
ESTIMATED TOTAL WATER USAGE PER DAY: = 360 GPD
ESTIMATED RETENTION TIME: = 2.5 HRS
ESTIMATED TOTAL WATER USAGE: = 900 GAL
LOSS ALLOWANCE DUE TO EVAPORATION: = 5 %

ESTIMATED SIZE OF INTERCEPTOR = 855 GAL
ACTUAL SIZE OF INTERCEPTOR = 1000 GAL

LEGEND

SYMBOL	ABBREVIATION	DESCRIPTION
	S OR W	SOIL OR WASTE ABOVE FLOOR
	S OR W	SOIL OR WASTE BELOW FLOOR OR GRADE
CWV	CWV	COMBINATION WASTE & VENT BELOW FLOOR OR GRADE
SD	SD	STORM DRAIN ABOVE FLOOR
SD	SD	STORM DRAIN BELOW FLOOR OR GRADE
OD	OD	OVERFLOW DRAIN ABOVE FLOOR
	V	SANITARY VENT
	CW	COLD WATER
	HW	HOT WATER
	HWR	HOT WATER RETURN
CD	CD	CONDENSATE DRAIN
TP	TP	TRAP PRIMER
G	G	GAS LINE
A	A	COMPRESSED AIR LINE
F	F	FIRE LINE
AS	AS	AUTOMATIC SPRINKLER LINE
DOS	DOS	DIESEL OIL SUPPLY LINE
DOR	DOR	DIESEL OIL RETURN LINE
FW	FW	FILTER WATER
		DIRECTION OF FLOW
	SOV	SHUT-OFF VALVE
	SOV/GC	SHUT-OFF VALVE OR GAS COCK IN YARD BOX
	GC	GAS COCK
	BV	BALANCING VALVE
	FCO	FLOOR CLEANOUT
	WCO	WALL CLEANOUT
		RISER UP
		RISER DOWN
	ABV	ABOVE
	AP	ACCESS PANEL
	BEL	BELOW
	CLG	CEILING
	CONT	CONTINUATION
	COTG	CLEANOUT TO GRADE
	DN	DOWN
	EXIST	EXISTING
	FLR	FLOOR
	FFE	FINISH FLOOR ELEVATION
	I.E.	INVERT ELEVATION
	POC	POINT OF CONNECTION
	PLCS	PLACES
	SLVE	SLEEVE
	VTR	VENT THRU ROOF
	YB	YARD BOX

AIR EQUIPMENT SCHEDULE

ITEM	EQUIPMENT	DESCRIPTION
AC 1	AIR COMPRESSOR	INGERSOLL-RAND MODEL NO. 2475N7.5-P, TWO STAGE RECIPROCATING, MAXIMUM OVERALL DIMENSIONS SHALL BE 76" HIGH X 40" WIDE. THE COMPLETE UNIT SHALL BE BOLTED TO THE FLOOR AND PROVIDED WITH SEISMIC BRACES. AIR COMPRESSOR, 7.5 HP, 200 VOLTS, 3 PHASE, 60 HZ, COMPRESSOR SHALL DELIVERY 24.0 CFM AT 175 PSI. TANK SHALL BE 80 GALLON CAPACITY, VERTICAL TYPE. THE UNIT SHALL HAVE CENTRIFUGAL PRESSURE RELEASE FOR "LOAD FREE" STARTING AND AUTOMATIC SWITCH TO START AND STOP AT PRESET MINIMUM AND MAXIMUM PRESSURE LIMITS. THE UNIT SHALL BE COMPLETE WITH THE FOLLOWING ACCESSORIES MOUNTED ON THE UNIT: COMPLETELY ENCLOSED, CAL OSHA APPROVED BELT GUARD, OIL BATH AIR CLEANER, SAFETY VALVE, CHECK VALVE, AIR OUTLET VALVE, PRESSURE GAUGE, AUTOMATIC DRAIN VALVE W/ POWER CORD & PLUG (120 VOLT, SINGLE PHASE), PRESSURE SWITCH, 208 VOLT, THREE PHASE, 60 HZ, MAGNETIC MOTOR STARTER WITH THREE PHASE OVERLOAD PROTECTION. APPROXIMATE OPERATING WEIGHT = 611 LBS. CONTACT INFORMATION: CURT DAHMEN, AREA MANAGER ARNEL COMPRESSOR COMPANY 114 SUNSET AVE. INDUSTRY, CA 91744 DIRECT: 626.672.6407 FAX: 909.597.7338
QD 1	QUICK DISCONNECT	AMFLO MODEL NO. C10 AND CP9, 1/2" FEMALE NPT, PLATED STEEL COUPLER AND PLUG, WORKING PRESSURE 300 P.S.I. WITH ESCUTCHEON.
HR 1	HOSE REEL	REELCRAFT SERIES DP7000 MODEL NO. DP7850 OLP, COMPLETE WITH ENCLOSED DRIVE SPRING, ADJUSTABLE GUIDE ARM, 50'-0" HOSE W/ MAX. WORKING PRESSURE OF 300 PSI, AND REELCRAFT NO. S601020-2 (1/2") INLET HOSE ASSEMBLY. SEE DRAWINGS FOR LOCATIONS.
HR 2	HOSE REEL	LEONARD MODEL NO. ST-75-ED STAINLESS STEEL MANUAL BLENDER HOSE STATION WITH TEMPERATURE GAUGE AND HOT AND COLD WATERVALVES AND VACUUM BREAKER. SEE DRAWINGS FOR LOCATIONS.

Not for permitting or construction

PBK
ARCHITECT PBK Architects, Inc.
PBK.com
SAN LUIS OBISPO
1327 Archer Street, Suite 110
San Luis Obispo, CA 93401
805-528-3076

PDS
PocockDesignSolutions Inc.

FIRE STATION #44
COASTSIDE FIRE PROTECTION DISTRICT
501 STETSON STREET
MOSS BEACH, CA 94038
BID SET

COASTSIDE FIRE PROTECTION DISTRICT EST. 1960

BID SET

KEY PLAN
PLAN NORTH
TRUE NORTH

REGISTERED PROFESSIONAL ENGINEER
ANDREW K. OSSMAN
No. M30630
Exp. 12/31/26
MECHANICAL
STATE OF CALIFORNIA

CLIENT
COASTSIDE FIRE PROTECTION DISTRICT
PROJECT NUMBER
230137
DATE 3/13/2026
DRAWN BY: KF/OS CHKED BY: AD
REVISIONS

#	DESCRIPTION	DATE

This document is for plan review only

PLUMBING LEGEND, SCHEDULES, AND GENERAL NOTES

P0.1

1/30/2025 4:24:54 PM

FIXTURE SCHEDULE

ITEM	FIXTURE	ROUGH-IN CONNECTIONS TRAP	WASTE	VENT	HOT WATER	COLD WATER	GAS	DESCRIPTION
WC 1	WATER CLOSET (BAT. I/R SENSOR)	INT	4"	2"	--	1"	--	AMERICAN STANDARD (A/S) NO. 3351.101 "AFWALL MILLENIUM FLOWISE ELONGATED FLUSHOMETER TOILET", SIPHON JET, WALL HUNG, ELONGATED BOWL, TOP SPUD. COMPLETE WITH SLOAN ECOS NO. 8111-1.28 GPF BATTERY POWERED SENSOR OPERATED FLUSH VALVE, OLSONITE NO. 95SSCT SEAT AND ZURN NO. Z1201 & Z1202 SERIES CARRIER.
WC 2	WATER CLOSET (ACCESSIBLE, BAT. I/R SENSOR)	INT	4"	2"	--	1"	--	AMERICAN STANDARD (A/S) NO. 3351.101 "AFWALL MILLENIUM FLOWISE ELONGATED FLUSHOMETER TOILET", SIPHON JET, WALL HUNG, ELONGATED BOWL, TOP SPUD. COMPLETE WITH SLOAN ECOS NO. 8111-1.28 GPF BATTERY POWERED SENSOR OPERATED FLUSH VALVE, OLSONITE NO. 95SSCT SEAT AND ZURN NO. Z1201 & Z1202 SERIES CARRIER, MOUNT AT ADA ACCESSIBLE HEIGHT.
UR 1	URINAL (ACCESSIBLE)	INT	2"	1-1/2"	--	3/4"	--	AMERICAN STANDARD (A/S) NO. 6400.001 "STALLBROOK URINAL", FLOOR MOUNTED, WASHOUT. COMPLETE WITH SLOAN ECOS NO. 8186-0.125 GPF BATTERY POWERED FLUSH VALVE WITH B-STRAINER. INSTALL AT ADA ACCESSIBLE HEIGHT.
L 1	LAVATORY (HW/CW)	1-1/4"	2"	1-1/2"	1/2"	1/2"	--	AMERICAN STANDARD (A/S) NO. 0355.012 "LUCERNE WALL HUNG LAVATORY", 20" X 18", WALL HUNG. COMPLETE WITH GROHE LINEARE NO. 2379400A SINGLE LEVER FAUCET, McGUIRE NO. 155A 1-1/4" OUTLET "OPEN GRID P.O. PLUG", McGUIRE NO. PW8090NCO 1-1/4" L.A. PATTERN P-TRAP WITH TRAP AND SUPPLY COVERS, GALVANIZED NIPPLE AND CHROMIUM PLATED BRASS CASING, CHICAGO NO. 1019-ABCP STOPS WITH WHEEL HANDLE AND RIGID SUPPLIES, AND ZURN NO. Z-1231-EZR-WL ADJUSTABLE CONCEALED ARM CARRIER W/ SLEEVE FOR WASTE.
L 2	LAVATORY (UNDER COUNTER, HW/CW)	1-1/4"	2"	1-1/2"	1/2"	1/2"	--	AMERICAN STANDARD (A/S) NO. 0496.221 "OVALYN II UNDERCOUNTER LAVATORY", 20" X 17", UNDERCOUNTER MOUNTED, VITREOUS CHINA. COMPETE WITH GROHE LINEARE NO. 2057800A W/ LEVER HANDLES & POP UP DRAIN, McGUIRE NO. 8089NC 1-1/2" L.A. PATTERN P-TRAP, GALVANIZED NIPPLE AND CHROMIUM PLATED BRASS CASING, AND CHICAGO NO. 1019-ABCP STOPS WITH WHEEL HANDLE AND RIGID SUPPLIES. MOUNT IN ACCORDANCE WITH ADA EQUIREMENTS.
S 1	SINK (KITCHEN, SINGLE BOWL, HW/CW,)	1-1/2"	2"	1-1/2"	1/2"	1/2"	--	REFER TO ARCHITECTURAL DRAWING FOR INTEGRAL SINK INFORMATION. COMPLETE WITH ELKAY NO. LKAV4061 PRE-RINSE FAUCET WITH 1.5 GPM FLOW REGULATOR, McGUIRE NO. 151 1-1/2" OUTLET "BRASS BASKET STRAINER", McGUIRE NO. 8089NC 1-1/2" L.A. PATTERN P-TRAP AND CHICAGO NO. 1019-ABCP STOPS WITH WHEEL HANDLE AND RIGID SUPPLIES. SINK SIZE 30" X 18" X 10".
S 2	SINK (KITCHEN, SINGLE BOWL, HW/CW, DISPOSER)	1-1/2"	2"	1-1/2"	1/2"	1/2"	--	REFER TO ARCHITECTURAL DRAWING FOR INTEGRAL SINK INFORMATION. COMPLETE WITH ELKAY NO. LKAV4061 PRE-RINSE FAUCET WITH 1.5 GPM FLOW REGULATOR, McGUIRE NO. 151 1-1/2" OUTLET "BRASS BASKET STRAINER", INSINKERATOR EVOLUTION SERIES FOOD WASTE DISPOSER, 1 H.P./120V/10.2 AMP AVG., McGUIRE NO. 8089NC 1-1/2" L.A. PATTERN P-TRAP AND CHICAGO NO. 1019-ABCP STOPS WITH WHEEL HANDLE AND RIGID SUPPLIES. SINK SIZE 30" X 18" X 10".
S 3	SINK (SINGLE BOWL, HW/CW,)	1-1/2"	2"	1-1/2"	1/2"	1/2"	--	ELKAY NO. ELUH131650 "LUSTERTONE SINGLE BOWL UNDERMOUNT SINK", SINGLE COMPARTMENT, 18 GAUGE TYPE 304 STAINLESS STEEL, UNDERCOUNTER MOUNTED, 18-1/2" X 16" X 4-7/8" DEEP. COMPLETE WITH KOHLER NO. K-597 FAUCET WITH MODEL NO. 1167289 AERATOR, McGUIRE NO. 151 1-1/2" OUTLET "BRASS BASKET STRAINER", McGUIRE NO. 8089NC 1-1/2" L.A. PATTERN P-TRAP, GALVANIZED NIPPLE AND CHROMIUM PLATED BRASS CASING, AND CHICAGO NO. 1019-ABCP FIXED KEY STOP WITH RIGID SUPPLIES.
S 4	SINK (SINGLE BOWL, HW/CW)	1-1/2"	2"	1-1/2"	1/2"	1/2"	--	ELKAY NO. WCNSF8100L SINGLE COMPARTMENT, 14 GAUGE TYPE 304 STAINLESS STEEL, SCULLERY SINK, CUSTOM SIZE 72" LONG WITH 36" WIDE SINK AND 36" WIDE DRAIN BOARD. COMPLETE WITH CHICAGO NO. 629-CR45869AB, PRE-RINSE FITTING, WALL-MOUNTED WITH ADJUSTABLE ARMS, PRE-RINSE SPRAY VALVE 1.0 GPM. TWO CHICAGO NO. 625-SLOABCP REMOTE FOOT PEDAL VALVES, McGUIRE NO. 152 1-1/2" OUTLET "WIDE TOP SINK STRAINER", McGUIRE NO. PW8089NCO 1-1/2" L.A. PATTERN P-TRAP WITH TRAP AND SUPPLY COVERS, GALVANIZED NIPPLE AND CHROMIUM PLATED BRASS CASING, AND CHICAGO NO. 1019-ABCP STOPS WITH WHEEL HANDLE RIGID SUPPLIES. LEFT SIDE DRAIN BOARD.
SS 1	SERVICE SINK	3"	3"	2"	3/4"	3/4"	--	CECO NO. 871 "CORNER SERVICE SINK", ENAMELED CAST IRON, CORNER FLOOR MOUNTED, COMPLETE WITH CHICAGO NO. 445-PVB-CP FAUCET, CECO NO. B71-3" 3" DIAMETER DRAIN WITH FLAT CHROME STRAINER, CECO NO. B-872 COATED WIRE RIM GUARD AND HOSE.
SS 2	SERVICE SINK	3"	3"	2"	3/4"	3/4"	--	CECO NO. 865 "SERVICE SINK", 22" X 18", ENAMELED CAST IRON, WALL MOUNTED, COMPLETE WITH CHICAGO NO. 305-VBR FAUCET WITH INTEGRAL STOPS, PAIL HOOK, VACUUM BREAKER AND ADJUSTABLE SUPPLY ARMS, 3" DIAMETER CAST IRON P-TRAP STANDARD WITH STRAINER, AND CONCEALED WALL HANGER.
TP 1	TRAP PRIMER (SINGLE DRAIN)	--	--	--	--	1/2"	--	MIFAB NO. MR-500 TRAP PRIMER VALVE, BRASS BODY, ADJUSTABLE, COMPLETE WITH 1/2" COPPER TYPE "L" PIPE TO RECEPTOR. INSTALL PER MANUFACTURER'S RECOMMENDATIONS, COMPLETE BEHIND ACCESS PANEL WITH SHUT-OFF VALVE.
TP 2	TRAP PRIMER (MULTIPLE DRAIN)	--	--	--	--	1/2"	--	MIFAB NO. MR-500 TRAP PRIMER VALVE, BRASS BODY, ADJUSTABLE, COMPLETE WITH MI-DU DISTRIBUTION UNIT, 1/2" COPPER TYPE "L" PIPE TO EACH RECEPTOR. INSTALL PER MANUFACTURER'S RECOMMENDATIONS, COMPLETE BEHIND ACCESS PANEL WITH SHUT-OFF VALVE.
TP 3	TRAP PRIMER (ELECTRONIC)	--	--	--	--	1/2"	--	PPP NO. MP-500-115V MINI-PRIME ELECTRONIC TRAP SEAL PRIMER SYSTEM WITH BALL VALVE, VACUUM BREAKER AND SOLENOID VALVE (120 VOLT, 1 PHASE). COMPLETE WITH SHUT-OFF VALVE AND 1/2" COPPER TYPE "L" PIPE TO RECEPTOR.
WHA 1	WATER HAMMER ARRESTOR	--	--	--	--	--	--	ZURN NO. Z-1700 SERIES "SHOKTROL" WATER HAMMER ARRESTOR COMPLETE BEHIND ACCESS PANEL. INSTALL PER MANUFACTURER'S RECOMMENDATIONS.
FD 1	FLOOR DRAIN	2"	2"	1-1/2"	--	--	--	ZURN NO. ZN-415-BZ1-P, CAST IRON BODY, COMPLETE WITH ROUND NICKEL-BRONZE TOP, CLAMPING COLLAR, 1/2" TRAP PRIMER CONNECTION AND P-TRAP.
FD 2	FLOOR DRAIN (SHOWER)	2"	2"	1-1/2"	--	--	--	ZURN NO. ZN-415-BZ1-113, CAST IRON BODY, COMPLETE WITH ROUND NICKEL-BRONZE TOP, CLAMPING COLLAR, AND P-TRAP.
TD 1	TRENCH DRAIN	3"	3"	--	--	--	--	ZURN NO. Z886-HPD CUSTOM PREFABRICATED TRENCH DRAIN, WITH DUCTILE CAST IRON LONGITUDINAL GRATE.
TD 2	TRENCH DRAIN	4"	4"	2"	--	--	--	ZURN NO. Z8206-BG-U4-E1, "Z882-HDS" WIDE TRENCH SYSTEM", COMPLETE WITH GALVANIZED WIDE BAR GRATE, 4" NO-HUB BOTTOM OUTLET, CLOSED END CAP, BOTTOM DOME STRAINER AND P-TRAP. CONTRACTOR TO FIELD CUT DRAIN BODY TO 48" LONG.
SH 1	SHOWER	--	--	--	3/4"	3/4"	--	SYMMONS NO. 261XBODY WITH 3591B15TRM WITH, 532SH-1.5. COMPLETE WITH PRESSURE BALANCING MIXING VALVE WITH LEVER HANDLE, INTEGRAL SERVICE STOPS, 1.5 GPM ADJUSTABLE SHOWER HEAD.
SH 2	SHOWER (ACCESSIBLE)	--	--	--	3/4"	3/4"	--	SYMMONS NO. S262XBODYNS WITH S3598BL515TRM, AND ADA SLIDE/GRAB BAR ASSEMBLY H359315. COMPLETE WITH PRESSURE BALANCING MIXING VALVE WITH LEVER HANDLE, INTEGRAL SERVICE STOPS, HAND-HELD SHOWER, 60" HOSE, INLINE VACUUM BREAKER AND 36" SLIDE BAR.
SH 3	SHOWER (DECON.)	--	--	--	3/4"	3/4"	--	CHICAGO NO. 923-HC WALL MOUNTED COMBINATION PRE-RINSE FITTING WITH 44" STAINLESS STEEL HOSE #80 SPRAY HEAD AND 23" RISER WITH INTEGRATED PIPE SUPPORT AND HOOK ASSEMBLY AND ADJUSTABLE HC SUPPLY ARMS WITH INTEGRAL CHECKS AND 369 LEVER HANDLES AND FINISH CHROME PLATE.
FS 1	FLOOR SINK	2"	2"	1-1/2"	--	--	--	ZURN NO. ZN1901-KC-P-2, 12" X 12" X 8" DEEP, CAST IRON BODY, ACID-RESISTING ENAMELED INTERIOR. COMPLETE WITH DOME STRAINER, NICKEL-BRONZE HALF GRATE, SEEPAGE FLANGE, TRAP PRIMER CONNECTION AND P-TRAP.
WB 1	WASHING BOX	2"	2"	1-1/2"	3/4"	3/4"	--	ACORN NO. 8186, TYPE 304 STAINLESS STEEL, RECESSED BOX WITH 3/4" HOT AND COLD WATER VALVES, SCREWDRIVER STOPS, VACUUM BREAKERS AND 2" DRAIN PIPE.
SI 1	SAND-OIL INTERCEPTOR	--	--	--	--	--	--	JENSEN NO. 1000EPE-SO, 2-COMPARTMENT PRE-CAST CONCRETE SAND-OIL INTERCEPTOR, 1000 GALLON CAPACITY. COMPLETE WITH MANHOLES WITH CONCRETE MANHOLE EXTENSIONS TO GRADE AS REQUIRED AND 24" DIA. GAS TIGHT CAST IRON TRAFFIC WEIGHT COVERS. (ENTIRE INSTALLATION SHALL CONFORM TO THE MANUFACTURER'S RECOMMENDATIONS).
RD 1	ROOF DRAIN	SEE PLAN FOR SIZES						ZURN NO. ZC100-DP-84, 15" CAST IRON BODY, COMPLETE WITH ADJUSTABLE EXTENSION SLEEVE, FLASHING COLLAR, STAINLESS STEEL GRAVEL STOP, CAST IRON DOME STRAINER, SUMP RECEIVER, AND UNDERDECK CLAMP.
OD 1	OVERFLOW DRAIN	SEE PLAN FOR SIZES						ZURN NO. ZC100-DP-84-89, 15" CAST IRON BODY, COMPLETE WITH CAST IRON DOME STRAINER, UNDERDECK CLAMP, AND 2" HIGH WATER DAM.
AD 1	AREA DRAIN	SEE PLAN FOR SIZES						ZURN NO. ZN-158-NH-C "8" TOP PROM-DECK DRAIN WITH HEEL PROOF GRATE, CAST IRON BODY, COMPLETE WITH SQUARE POLISHED NICKEL-BRONZE GRATE AND UNDERDECK CLAMP.
DN 1	DOWNSPOUT NOZZLE	SEE PLAN FOR SIZES						ZURN NO. Z199-DC, STAINLESS STEEL FRAME WITH FABRICATED SECURED PERFORATED STAINLESS STEEL HINGED STRAINER, THREADED INLET AND DECORATIVE FACE OF WALL FLANGE AND OUTLET NOZZLE.
ET 1	EXPANSION TANK	--	--	--	--	--	--	WILKINS NO. WXT-18, 4 GALLON, DIAPHRAGM TYPE, PRE-PRESSURIZED WITH WELDED EXTERIOR, BUTYL DIAPHRAGM AND EPOXY COATED EXTERIOR W/ MAPA MXC-11 EXPANSION TANK CAGE.
HB 1	HOSE BIBB (FREE STANDING, ROOF)	--	--	--	--	3/4"	--	ACORN NO. 8126-CR "BENT NOSE" HOSE BIBB, FREE STANDING, CHROME-PLATED ROUGH, WITH INTEGRAL VACUUM BREAKER, LOOSE KEY OPERATION. SUPPLY PIPING SHALL BE SECURELY FASTENED TO ROOF DECKING WITH 3/4" NIBCO NO. 724-5-A "HY-SET HANGER COUPLING".
RHB 1	RECESSED HOSE BIBB	--	--	--	--	3/4"	--	ACORN NO. 8104, RECESSED WALL MOUNTED, STAINLESS STEEL BOX, WITH INTEGRAL VACUUM BREAKER AND LOCKING DOOR.
SGV 1	SEISMIC GAS VALVE	ITEM SHALL BE SIZED TO MATCH FULL LINE SIZE OF PIPING SERVED. SEE PLAN FOR SIZES.						KOSO/CALIFORNIA EARTHQUAKE SENSITIVE SHUT-OFF VALVE, 60 PSI WORKING PRESSURE, U.L. LISTED, THREADED CONNECTIONS FOR SIZES 2" AND LESS, FLANGED CONNECTIONS FOR SIZES GREATER THAN 2". PRESSURE DROP SHALL NOT EXCEED 13' EQUIVALENT PIPING LENGTH.
SV 1	SOLENOID VAVLE	ITEM SHALL BE SIZED TO MATCH FULL LINE SIZE OF PIPING SERVED. SEE PLAN FOR SIZES.						ISIMET 300 SERIES ALUMINUM BODY SOLENOID VALVE, NATURAL GAS, 24 VOLT, GAS VALVE WILL HAVE Y-STRAINER, BALL VALVE AND UNION. (WIRING FROM CONTROL STATION BY ELECTRICAL CONTRACTOR) FOR PIPE SIZES 1/2" THRU 3".
SV 2	SOLENOID VAVLE	ITEM SHALL BE SIZED TO MATCH FULL LINE SIZE OF PIPING SERVED. SEE PLAN FOR SIZES.						ISIMET 300 SERIES ALUMINUM BODY SOLENOID VALVE, NATURAL GAS, 24 VOLT, GAS VALVE WILL HAVE Y-STRAINER, BALL VALVE AND UNION. (WIRING FROM CONTROL STATION BY ELECTRICAL CONTRACTOR) FOR PIPE SIZES 1/2" THRU 3".
CS 1	CONTROL STATION (WALL-MOUNT)	--	--	--	--	--	--	ISIMET MODEL NUMBER FLA-v2-F-LV-P. FLUSH-MOUNTED 24VDC AND PUSH BUTTON CONTROL. 120 VOLT, 15 AMP DEDICATED INPUT CIRCUIT, 24VDC OUTPUT CURCUIT WITH (18/4AWG) WIRING. CONFIGURED FOR INSTALLATION IN WALL.
ROP 1	REMOTE OPERATOR	--	--	--	--	--	--	ISIMET OGC-F-P OUTDOOR GRILL CONTROLLER 24VDC INPUT AND OUTPUT CURCUIT. (WIRING FROM ROMOTE OPERATOR BY ELECTRICAL CONTRACTOR).
ECE 1	ELECT. CONTACT ENCLOSURE	--	--	--	--	--	--	ISIMET E314-S-L, FOUR POLE CONTACT ENCLOSURE, CONFIGURED FOR RECESSED INSTALLATION. 24 VOLT WIRING OUTPUT SIGNAL FROM THE CONTROLLER TO TURN ON AND OFF THE CIRCUITS OPERATED BY THE CONTACT.
GC 1	GAS COCK	--	--	--	--	--	1 1/4"	TRRACPIPE FGP-WBTM-750, RECESSED METAL WALL BOX WITH GAS COCK.
IMB 1	ICE MAKER BOX	--	--	--	--	1/2"	--	GUY GRAY NO. MIB1-HAAB "METAL LEAD FREE ICE MAKER BOX", COMPLETE WITH INTEGRAL HAMMER ARRESTER QUARTER-TURN VALVE, 1/4" O.D. COMPRESSION OUTLET CONNECTION AND WHITE POWDER COAT FINISH. INSTALL ICE MAKER BOX @ 18" ABOVE FINISH FLOOR.
RO 1	REVERSE OSMOSIS	--	--	--	--	3/4"	--	CLEARWATER CORPORATION MODEL NO. CHGR050PP-4 SYSTEM SHALL CONSIST OF GRADIENT DENSITY PREFILTER, CARBON BLOCK PREFILTER, HIGH EFFICIENCY 1 TO 1 MEMBRANE, PERMEATE PUMP, GAC/PHOSPHATE POST FILTER, AUTOMATIC SHUT OFF, DRAIN LINE FLOW CONTROL, THREE TH-12P STORAGE TANKS, AIR GAP RO FAUCET
F 1	REVERSE OSMOSIS FAUCET	--	--	--	--	3/4"	--	TOMLINSON 600 CBR SERIES "CONTEMPORARY RO FAUCET" FINISH TO MATCH ELKAY NO. LKAV4061 PRE-RINSE FAUCET. COMPLETE WITH AIRGAP MODEL NO. AG200-005 "DUAL AIR GAP FOR DISHWASHER AND REVERSE OSMOSIS FILTERS" CONNECT WASTE FROM REVERSE OSMOSIS SYSTEM AND DISHWASHER TO GARBAGE DISPOSER. AIRGAP TO BE INSTALLED BEFORE PLUMBING THE GARBAGE DISPOSER.
DF 1	DRINKING FOUNTAIN W/BOTTLE FILLER (ACCESSIBLE)	1-1/2"	2"	1-1/2"	--	3/4"	--	ELKAY NO. LZWS-EDFP217K WITH BOTTLE FILLER, WALL MOUNTED, 18-GAUGE STAINLESS STEEL. MANUFACTURE RECOMMENDED MOUNTING PLATE, COMPLETE WITH CHICAGO NO. 45LKABCP ANGLE STOP WITH 1/2" FEMALE INLET & OUTLET. MOUNT AT ADA ACCESSIBLE HEIGHT.

Not for permitting or construction

PBK

ARCHITECT PBK Architects, Inc.
PBK.com
SAN LUIS OBISPO
1327 Archer Street, Suite 110
San Luis Obispo, CA 93401
805-329-3076

PDS
PocockDesignSolutions Inc.

FIRE STATION #44
COASTSIDE FIRE PROTECTION DISTRICT

501 S STETSON STREET
MOSS BEACH, CA 94038
BID SET

COASTSIDE FIRE PROTECTION DISTRICT
BID SET

KEY PLAN
PLAN NORTH
TRUE NORTH

REGISTERED PROFESSIONAL ENGINEER
ANDREW R. GOSSMAN
No. M28630
Exp. 3/31/26
MECHANICAL
STATE OF CALIFORNIA

CLIENT
COASTSIDE FIRE PROTECTION DISTRICT
PROJECT NUMBER
230137
DATE 3/13/2026
DRAWN BY: KF/OS CHKED BY: AD
REVISIONS

#	DESCRIPTION	DATE

PLUMBING FIXTURE SCHEDULES

This document is for plan review only

P0.2

1/30/2025 4:24:54 PM

ABOVE GROUND FUEL TANK FUEL MANAGEMENT SYSTEM

ALL WIRING AND CONDUIT WILL BE INSTALLED PER MANUFACTURE REQUIREMENTS AND AS REQUIRED FOR A COMPLETE AND OPERABLE SYSTEM BY THE ELECTRICAL CONTRACTOR.

ABOVE GROUND FUEL TANK

1000 GALLON CAPACITY ABOVE GROUND FUEL TANK BY ENVIRO VAULT. 1000 GALLON DIESEL. INSTALL OWNER FURNISHED TANK WITH ONE (1) NEW TOP-MOUNT DIESEL DISPENSER PACKAGE. DISPENSER PUMP SHALL BE MINIMUM 7 AMPS AND MAXIMUM 10 AMPS. TANK TO BE EQUIPPED WITH A SEVEN GALLON UL LISTED SPILL CONTAINMENT AND EARTHQUAKE RESTRAINTS IN ACCORDANCE WITH MANUFACTURER'S INSTRUCTIONS. ON THE NORTH END OF THE TANK, USING A STENCIL, PAINT THE STATEMENTS, "NO SMOKING" AND "EMERGENCY SHUT OFF SWITCH AT MAIN BUILDING". LETTERING TO BE 2 INCHES HIGH, BLACK IN COLOR AND OF HELVETICA REGULAR TYPE ONE REQUIRED, LOCATE AS INDICATED ON THE DRAWINGS. REFER TO SHEET A1.5 DETAILS 3-5.

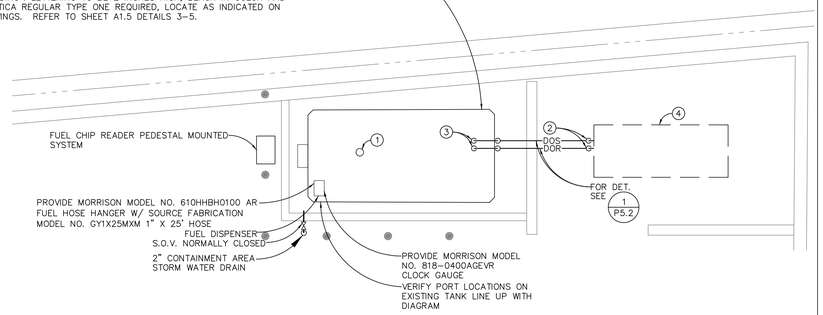

CONSTRUCTION KEY NOTES:

1. 2" D.O.V. UP TO 12'-0" ABOVE FINISH GRADE WITH OPW MODEL NO. 23-0033, (2") OPEN ATMOSPHERIC VAPOR VENT.
2. P.O.C. 3/4" D.O.S. AND 1" D.O.R. TO DAY TANK ON EMERGENCY GENERATOR PER MANUFACTURER RECOMMENDATIONS.
3. P.O.C. 3/4" D.O.S. AND 1" D.O.R. TO DAY TANK PER ON FUEL TANK PER MANUFACTURER RECOMMENDATIONS.
4. EMERGENCY GENERATOR WITH SUB-BASE TANK AND PUMPS. SEE ELECTRICAL DRAWINGS AND SPECIFICATIONS.

MATERIAL:

1. 3/4" DIESEL FUEL SUPPLY LINE AND 1" DIESEL FUEL RETURN LINE SHALL BE SCHEDULE 40 BLACK STEEL PIPE CONFORMING TO ASTM A-53 USING 150 POUND BANDED MALLEABLE IRON SCREWED FITTING.

CONSTRUCTION NOTES:

1. TANK INSTALLATION AND TESTING SHALL COMPLY WITH NFPA 30, 30A, 70 AND UFC STANDARD 79-9 AND ALL APPLICABLE CODES, STANDARD PRACTICES OF THE TRADE AND AUTHORITIES HAVING JURISDICTION AND TANK MFG. INSTRUCTIONS. REFER TO 2.4N ON SPECIFICATION SECTION 25 32 13.
2. CONTRACTOR SHALL OBTAIN ENVIRONMENT HEALTH SERVICES APPROVAL OF ABOVE GROUND FUEL TANK, BEFORE INSTALLATION.
3. ANCHORING TANK SHALL BE INSTALL PER TANK MANUFACTURER RECOMMENDATIONS.
4. SECURE TANK WITH SEISMIC ANCHORS TO FOUNDATION.
5. DRAIN AND CLEAN THE TANK.
6. PREP, PRIME AND PAINT THE EXTERIOR OF THE TANK, FITTINGS AND SPILL CAN.
7. REMOVE AND REPLACE THE DISPENSER, NOZZLE AND HOSE. THE NEW DISPENSER SHALL BE A FR702.
8. REMOVE AND REPLACE THE CLOCK GAUGE.
9. INSTALL A HOSE HANGER.
10. PERFORM A PRESSURE TEST WITH NITROGEN GAS AFTER THE TANK HAS BEEN RELOCATED.
11. PROVIDE AND INSTALL NEW K800 FUEL ISLAND TERMINAL (PEDESTAL MOUNTED WITH KEY CHIP READER) ALONG WITH PETRONET AND PETROVEND K800 FUEL SITE CONTROLLER.
12. PROVIDE AND INSTALL A NEW PETROVEND SYSTEM.
13. PROGRAM THE SITE AND TEST THE SYSTEM.

SCALE	2
1/4"=1'-0"	

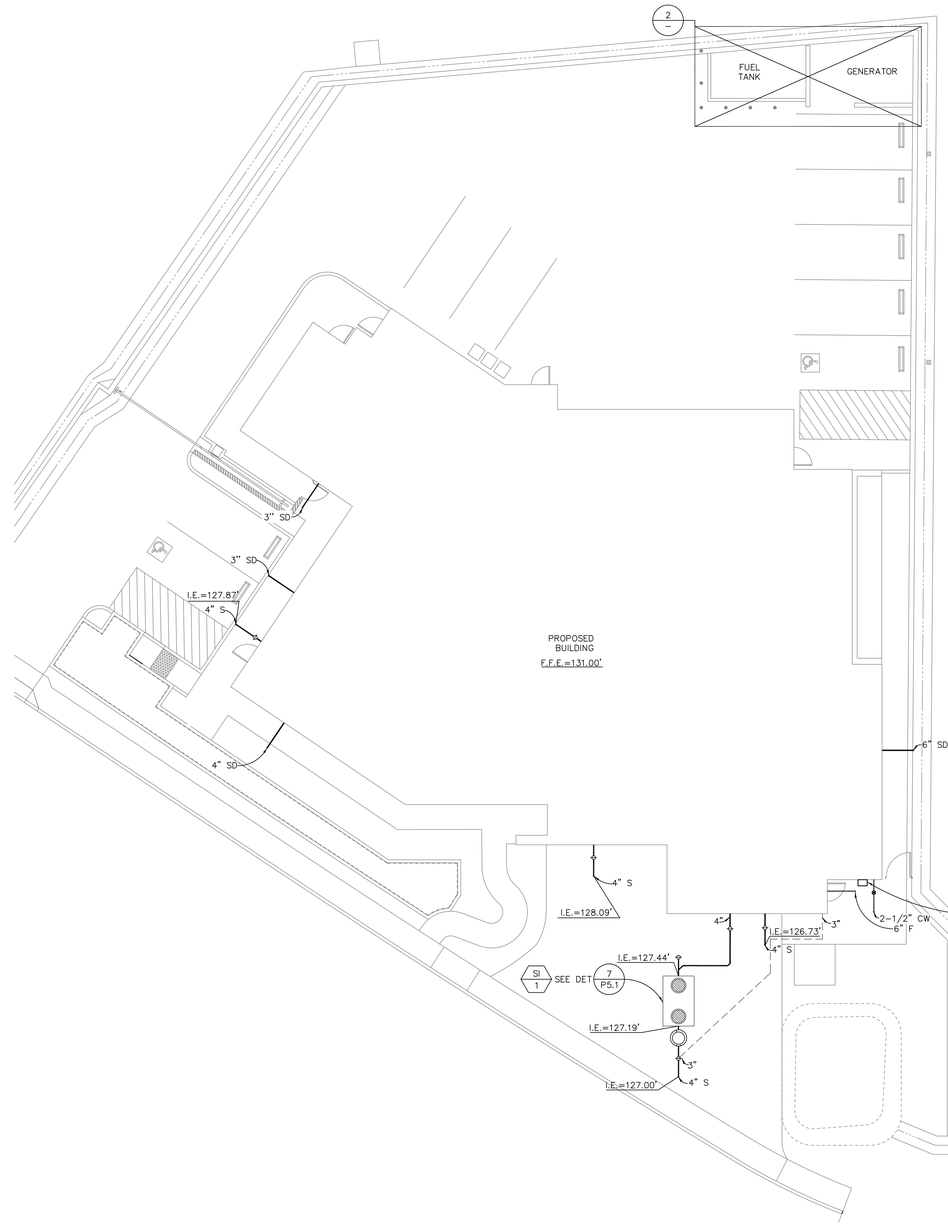

GAS METER & SERVICE LINE PROVIDE BY PG & E CO., GAS LOAD AT LOW PRESSURE & TOTAL DEVELOPED LENGTH 200 FT. OUTSIDE BUILDING.

WATER HEATING	=	150 CFH
KITCHEN EQUIPMENT	=	165 CFH
UNIT HEATING	=	350 CFH
MISC EQUIPMENT	=	330 CFH
TOTAL	=	995 CFH

CONSTRUCTION NOTES:

1. FOR CONTINUATION OF ALL UTILITIES SEE CIVIL ENGINEERING DRAWINGS.

NORTH

PLUMBING SITE PLAN

SCALE	1
1"=10'-0"	

Not for permitting or construction

PBK

ARCHITECT PBK Architects, Inc.
PBK.com
SAN LUIS OBISPO
1327 Archer Street, Suite 110
San Luis Obispo, CA 93401
805-528-3076

PDS
PocockDesignSolutions Inc.

FIRE STATION #44
COASTSIDE FIRE PROTECTION DISTRICT

501 STETSON STREET
MOSS BEACH, CA 94038

BID SET

COASTSIDE FIRE PROTECTION DISTRICT EST. 2002

BID SET

KEY PLAN

PLAN NORTH | TRUE NORTH

REGISTERED PROFESSIONAL ENGINEER
ANDREW R. GUSSMAN
No. M20630
Exp. 12/31/26
MECHANICAL
STATE OF CALIFORNIA

CLIENT
COASTSIDE FIRE PROTECTION DISTRICT

PROJECT NUMBER
230137

DATE 3/13/2026

DRAWN BY: KFIOS CHKED BY: AD

REVISIONS

#	DESCRIPTION	DATE

PLUMBING SITE PLAN

This document is for plan review only

P1.1

1/30/2025 4:24:54 PM

ROOM #	ROOM NAME	ROOM #	ROOM NAME
101	LOBBY	201	BATTALION CHIEF
102	RESTROOM	202	BALCONY
103	CAPTAIN'S OFFICE	203	BC RESTROOM
104	OFFICE	204	DORM 1
105	ELEVATOR	205	RESTROOM
106	FITNESS	206	ELEVATOR
107	STAIRWAY 1	207	RESTROOM
108	RESTROOM	208	CAPTAIN
109	ELECTRICAL ROOM	209	DORM 2
110	HALLWAY	210	DORM 3
111	CUSTODIAL	211	LAUNDRY
112	ELEVATOR MACHINE	212	HALLWAY
113	STORAGE	213	ACCESSIBLE RR
114	TELECOM	214	BESTIBULE
115	CLASSROOM	215	STORAGE
116	APPARATUS BAY	216	PANTRY
117	YARD STORAGE	217	KITCHEN
118	DECON	218	DINING
119	EMS STORAGE	219	DAYROOM
120	TURNOUT	220	DECK
121	COMPRESSOR		
122	SHOP		
123	HOSE DRY STORAGE		
124	FIRE RISER		
125	VESTIBULE		

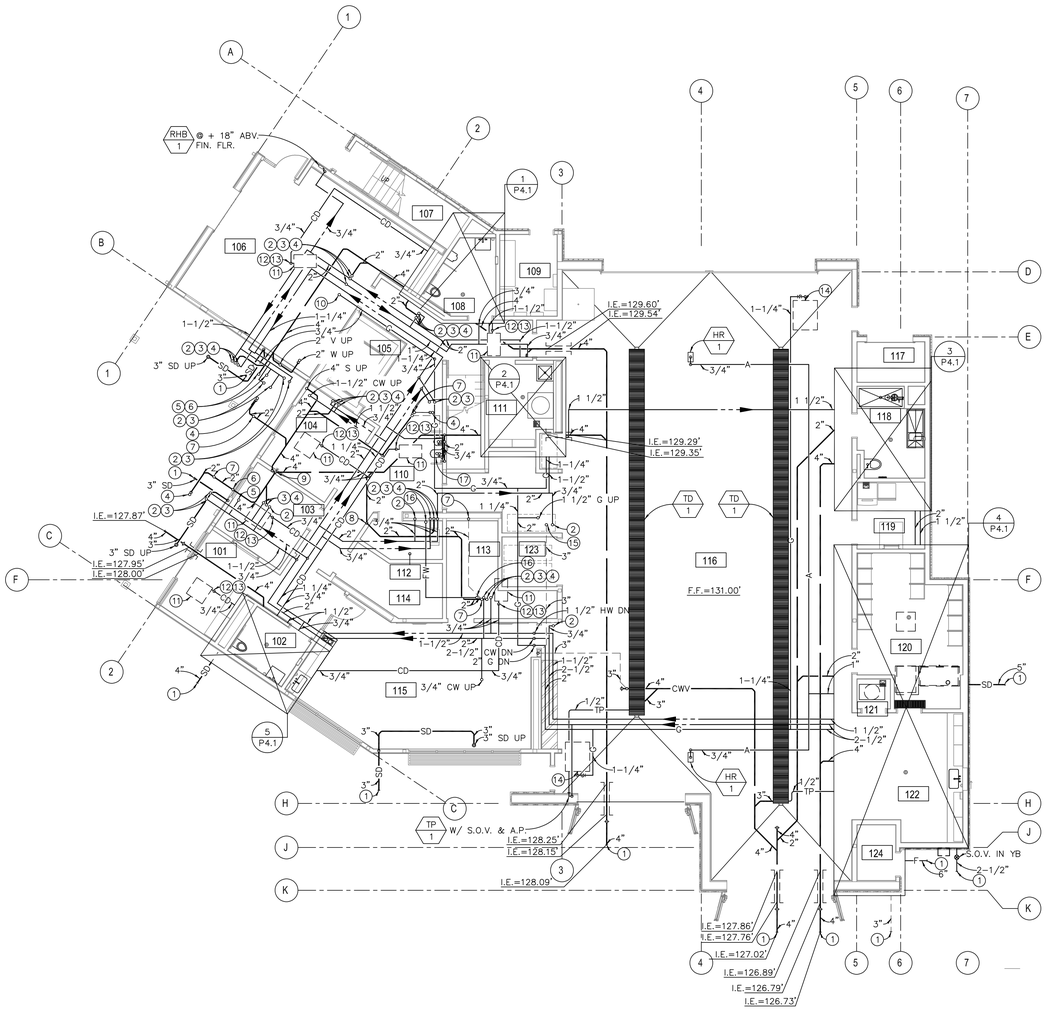

CONSTRUCTION NOTES:

1. ALL HORIZONTAL STORM DRAIN PIPING ABOVE CEILING SHALL SLOPE AT 1% UNLESS OTHERWISE NOTED.
2. ALL CONDENSATE DRAIN PIPING ABOVE CEILING SHALL SLOPE AT 1% UNLESS OTHERWISE NOTED.
3. ALL GAS PIPING SIZES INSIDE THE BUILDING ARE BASED ON CALIFORNIA PLUMBING CODE 2022 TABLE 1215.2(1) (LOW PRESSURE) AT TOTAL DEVELOPED LENGTH 200 FEET & 995 CFH.
4. ALL SLEEVES THRU FOOTINGS SHALL BE MINIMUM TWO PIPE SIZES LARGER THAN THE PIPE GOING THRU IT, PROVIDE ALL SLEEVES.
5. ALL STORM DRAIN LINES, WASTE LINES & COLD WATER LINES INTO FOOTINGS SHALL BE DOUBLE HALF LAP WRAPPED WITH 1/8" THICK "ARMOFLEX" INSULATION. ALSO, THE CONTRACTOR SHALL PROVIDE BLOCKED OUT AREAS IN THE FOOTING FOR STORM DRAIN LINES, WASTE LINES & COLD WATER LINES. ALL PIPING SHALL AVOID THE LOWER 9" OF THE FOOTING.

CONSTRUCTION KEY NOTES:

1. FOR CONTINUATION OF ALL UTILITIES SEE SHEET P1.1.
2. 3/4" CW UP
3. 3/4" HW UP
4. 2" W UP
5. 1-1/2" CW UP
6. 4" S UP
7. 2" V UP
8. 2" W UP & DN IN WALL
9. 4" S UP & DN IN WALL
10. 3/4" G UP
11. FAN COIL UNIT ABOVE CEILING, SEE MECH. DWGS. FOR EXACT LOCATION.
12. P.O.C. 3/4" CD TO CONDENSATE PUMP IN CLG.
13. CONDENSATE PUMP PROVIDED BY MECHANICAL CONTRACTOR.
14. P.O.C. 1-1/4" G TO UNIT HEATER BEL. CLG. W/ G.C. (175 CFH) SEE MECH DWG. FOR EXACT LOCATION.
15. 3" V UP
16. FILTER WATER LINE UP
17. DF-1

NORTH

PLUMBING FIRST FLOOR PLAN

SCALE 1/8"=1'-0"

1

Not for permitting or construction

PBK

ARCHITECT PBK Architects, Inc.
PBK.com
SAN LUIS OBISPO
1327 Archer Street, Suite 110
San Luis Obispo, CA 93401
805-529-3076

PDS
PocockDesignSolutions Inc.

FIRE STATION #44
COASTSIDE FIRE PROTECTION DISTRICT

501 STETSON STREET
MOSS BEACH, CA 94038

BID SET

KEY PLAN

PLAN NORTH TRUE NORTH

REGISTERED PROFESSIONAL ENGINEER ANDREW K. OSSMANN No. M30630 Exp. 12/31/26 MECHANICAL STATE OF CALIFORNIA

CLIENT
COASTSIDE FIRE PROTECTION DISTRICT

PROJECT NUMBER
230137

DATE 3/13/2026

DRAWN BY: KF/OS CHKED BY: AD

REVISIONS

#	DESCRIPTION	DATE

PLUMBING FIRST FLOOR PLAN

This document is for plan review only

P2.1

1/30/2025 4:24:54 PM

ROOM #	ROOM NAME
201	BATTALION CHIEF
202	BALCONY
203	BC RESTROOM
204	DORM 1
205	RESTROOM
206	ELEVATOR
207	CAPTAIN RR
208	BALCONY
209	CAPTAIN DORM
210	DORM 2
211	DORM 3
212	LAUNDRY
213	HALLWAY
214	ACCESSIBLE RR
215	VEST
216	STOR 3
217	PANTRY
218	KITCHEN
219	DINING
220	DAYROOM
221	DECK
222	SLIDE POLE DECK

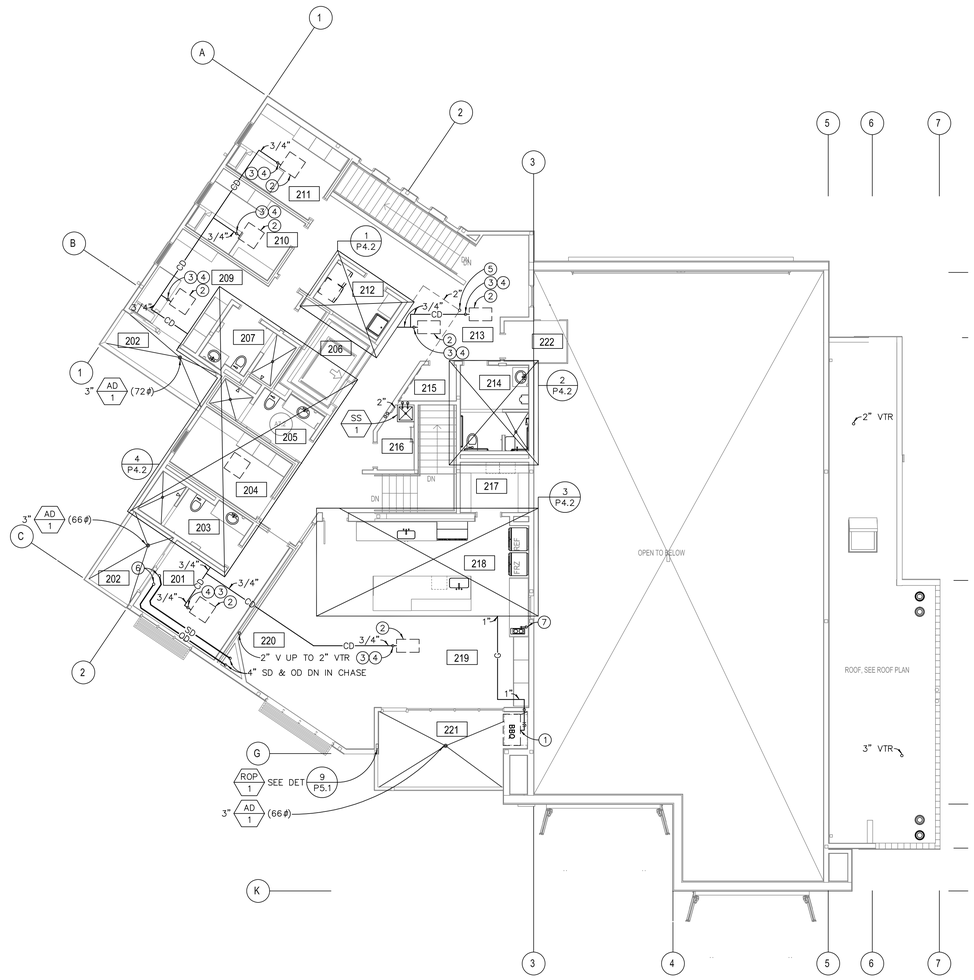

CONSTRUCTION NOTES:

1. ALL STORM DRAIN PIPE SIZES ARE BASED ON CALIFORNIA PLUMBING CODE 2022 TABLE 1103.1 & 1103.2 AT 4" RAINFALL PER HOUR.
2. ALL HORIZONTAL STORM DRAIN PIPING ABOVE CEILING SHALL SLOPE AT 1% UNLESS OTHERWISE NOTED.
3. ALL CONDENSATE DRAIN PIPING ABOVE CEILING SHALL SLOPE AT 1% UNLESS OTHERWISE NOTED.
4. ALL GAS PIPING SIZES INSIDE THE BUILDING ARE BASED ON CALIFORNIA PLUMBING CODE 2022 TABLE 1215.2(1) (LOW PRESSURE) AT TOTAL DEVELOPED LENGTH 200 FEET & 995 CFH.

CONSTRUCTION KEY NOTES:

1. P.O.C. 1" GAS TO BBQ (120 CFH) WITH QUICK GAS DISCONNECT.
2. FAN COIL UNIT ABOVE CEILING, SEE MECH. DWGS. FOR EXACT LOCATION.
3. P.O.C. 3/4" CD TO CONDENSATE PUMP IN CLG.
4. CONDENSATE PUMP PROVIDED BY MECHANICAL CONTRACTOR.
5. 2" V UP TO 2" VTR
6. 4" SD & OD UP
7. 1/2" COLD WATER WITH ANGLE STOP FOR COFFEE MAKER.

NORTH

PLUMBING SECOND FLOOR PLAN

SCALE 1/8"=1'-0"

1

Not for permitting or construction

PBK

ARCHITECT PBK Architects, Inc.
PBK.com
SAN LUIS OBISPO
1327 Archer Street, Suite 110
San Luis Obispo, CA 93401
805-529-3076

PDS
PocockDesignSolutions Inc.

FIRE STATION #44
COASTSIDE FIRE PROTECTION DISTRICT

501 STETSON STREET
MOSS BEACH, CA 94038

BID SET

BID SET

KEY PLAN

PLAN NORTH

TRUE NORTH

REGISTERED PROFESSIONAL ENGINEER
ANDREW R. GUSSMAN
No. M30630
Exp. 12/31/26
MECHANICAL
STATE OF CALIFORNIA

CLIENT
COASTSIDE FIRE PROTECTION DISTRICT

PROJECT NUMBER
230137

DATE 3/13/2026

DRAWN BY: KFIOS CHKED BY: AD

REVISIONS

#	DESCRIPTION	DATE

PLUMBING SECOND FLOOR PLAN

This document is for plan review only

P2.2

10/30/2025 4:24:54 PM

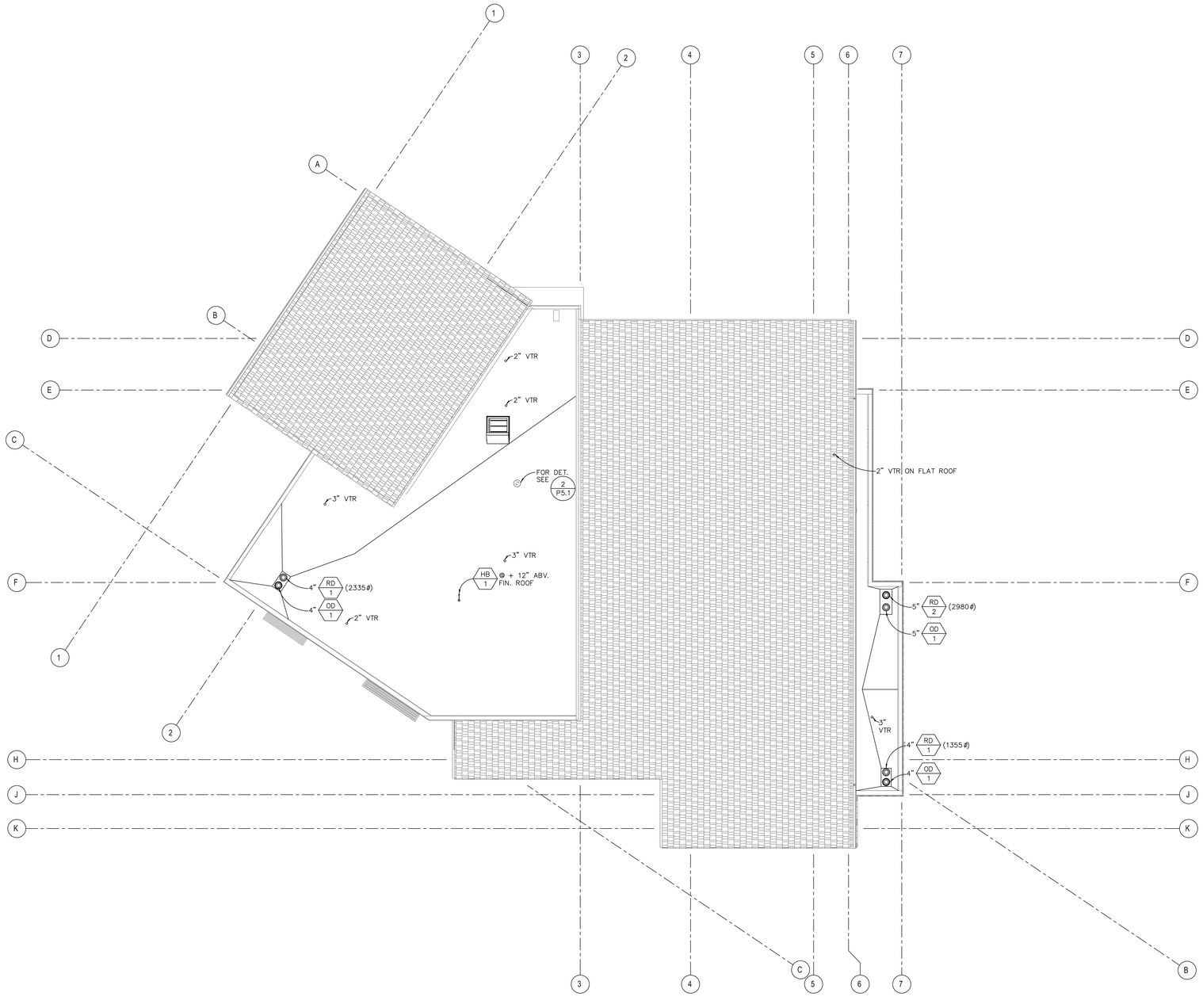

CONSTRUCTION NOTES:

1. ALL STORM DRAIN PIPE SIZES ARE BASED ON CALIFORNIA PLUMBING CODE 2022 TABLE 1103.1 & 1103.2 AT 4" RAINFALL PER HOUR.

NORTH

PLUMBING ROOF PLAN

SCALE 1/8"=1'-0"

1

1/30/2025 4:24:54 PM

Not for permitting or construction

PBK

ARCHITECT PBK Architects, Inc.
PBK.com
SAN LUIS OBISPO
1327 Archer Street, Suite 110
San Luis Obispo, CA 93401
805-528-3076

PDS
PocockDesignSolutions Inc.

FIRE STATION #44
COASTSIDE FIRE PROTECTION DISTRICT

501 STETSON STREET
MOSS BEACH, CA 94038
BID SET

BID SET

KEY PLAN
PLAN NORTH
TRUE NORTH

REGISTERED PROFESSIONAL ENGINEER
ANDREW R. GUSSMAN
No. M29928
Exp. 3/31/26
MECHANICAL
STATE OF CALIFORNIA

CLIENT
COASTSIDE FIRE PROTECTION DISTRICT
PROJECT NUMBER
230137
DATE 3/13/2026
DRAWN BY: KF/OS CHKED BY: AD
REVISIONS

#	DESCRIPTION	DATE

PLUMBING ROOF PLAN

This document is for plan review only

P3.1

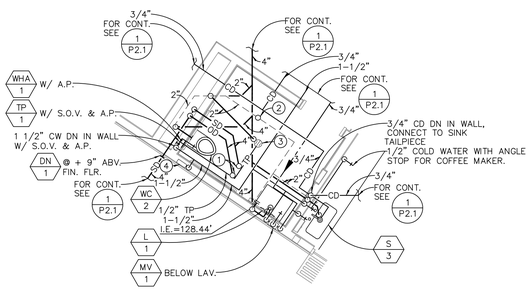

CONSTRUCTION KEY NOTES:

1. 4" SD & OD UP
2. 2" V UP IN WALL ABV.
3. FD-1
4. RHB-1 @ +18" ABV. FIN. FLR.

ENLARGED PLUMBING FLOOR PLAN

SCALE 1/4"=1'-0" | 5

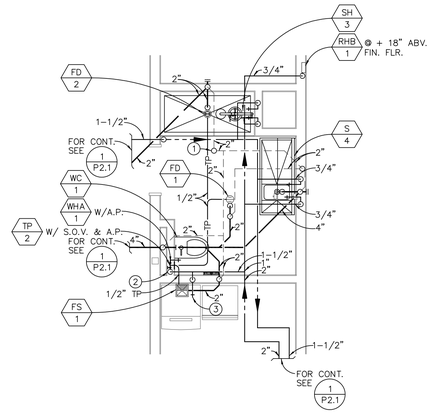

CONSTRUCTION KEY NOTES:

1. 2" V UP TO 2" VTR
2. 1 1/2" CW DN IN WALL W/ S.O.V. & A.P.
3. 1/2" COLD WATER WITH ANGLE STOP FOR ICE MAKER.

ENLARGED PLUMBING FLOOR PLAN

SCALE 1/4"=1'-0" | 3

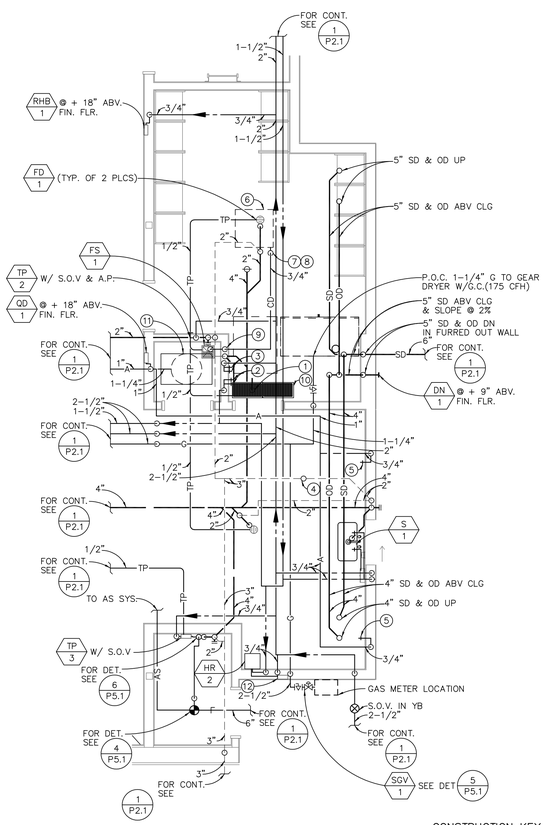

CONSTRUCTION KEY NOTES:

1. P.O.C. 3" WASTE LINE TO EXTRACTOR AND SPILL INTO TRENCH DRAIN.
2. 1" HOT WATER DOWN IN WALL WITH TWO (2) 3/4" HOT WATER WITH S.O.V. FOR EXTRACTOR.
3. 1 1/4" COLD WATER DOWN IN WALL WITH TWO (2) 3/4" COLD WATER WITH S.O.V. FOR EXTRACTOR.
4. 3" V UP TO 3" VTR.
5. QD-1 @ 54" ABV. FIN. FLR.
6. FAN COIL UNIT ABOVE CEILING, SEE MECH. DWGS. FOR EXACT LOCATION.
7. P.O.C. 3/4" CD TO CONDENSATE PUMP IN CLG.
8. CONDENSATE PUMP PROVIDED BY MECHANICAL CONTRACTOR.
9. 3/4" CD DN IN WALL, SPILL TO FLOOR SINK W/ 2" AIR GAP.
10. TD-2
11. AC-1
12. RHB-1 @ +18" ABV. FIN. FLR.

ENLARGED PLUMBING FLOOR PLAN

SCALE 1/4"=1'-0" | 4

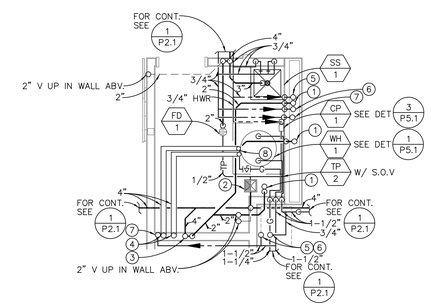

CONSTRUCTION KEY NOTES:

1. 2" W UP
2. FS-1
3. 4" S UP
4. 4" CONCENTRIC VENT INTAKE & EXHAUST UP
5. 3/4" HW UP
6. 3/4" CW UP
7. 1-1/2" CW DN IN WALL W/ S.O.V. & A.P.
8. P.O.C. 1-1/4" G TO WATER HEATER W/G.C.(150 CFH)

ENLARGED PLUMBING FLOOR PLAN

SCALE 1/4"=1'-0" | 2

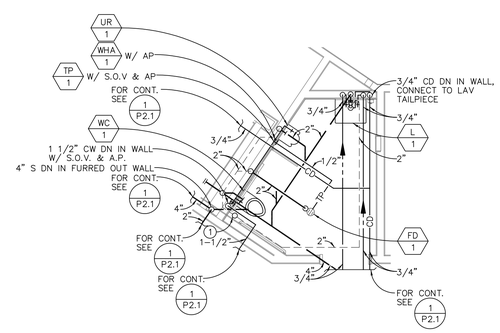

CONSTRUCTION KEY NOTES:

1. 2" V UP IN WALL ABV.

ENLARGED PLUMBING FLOOR PLAN

SCALE 1/4"=1'-0" | 1

1/30/2025 4:24:54 PM

Not for permitting or construction

PBK

ARCHITECT PBK Architects, Inc.
PBK.com
SAN LUIS OBISPO
1327 Archer Street, Suite 110
San Luis Obispo, CA 93401
805-529-3076

PDS
PocockDesignSolutions Inc.

FIRE STATION #44
COASTSIDE FIRE PROTECTION DISTRICT
501 STETSON STREET
MOSS BEACH, CA 94038
BID SET

COASTSIDE FIRE PROTECTION DISTRICT

BID SET

KEY PLAN

PLAN NORTH | TRUE NORTH

REGISTERED PROFESSIONAL ENGINEER
ANDREW R. DUSSEAU
No. M39528
Exp. 3/31/26
MECHANICAL
STATE OF CALIFORNIA

CLIENT
COASTSIDE FIRE PROTECTION DISTRICT

PROJECT NUMBER 230137

DATE 3/13/2026

DRAWN BY: KF/OS CHKED BY: AD

REVISIONS

#	DESCRIPTION	DATE

This document is for plan review only

PLUMBING ENLARGED PLANS

P4.1

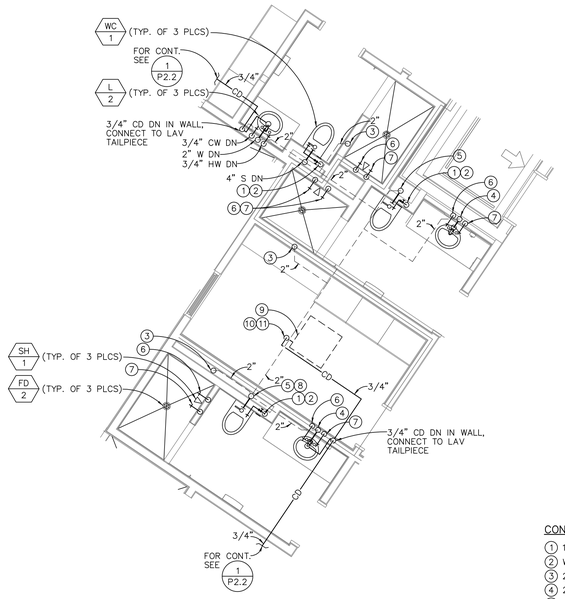

CONSTRUCTION KEY NOTES:

1. 1-1/2" CW DN IN WALL W/ S.O.V. & A.P.
2. WHA-1 W/A.P.
3. 2" V DN
4. 2" W DN
5. 4" S DN
6. 3/4" HW DN
7. 3/4" CW DN
8. 2" V UP TO 3" VTR
9. FAN COIL UNIT ABOVE CEILING, SEE MECH. DWGS. FOR EXACT LOCATION.
10. P.O.C. 3/4" CD TO CONDENSATE PUMP IN CLG.
11. CONDENSATE PUMP PROVIDED BY MECHANICAL CONTRACTOR.

ENLARGED PLUMBING FLOOR PLAN

SCALE 1/4"=1'-0" | 4

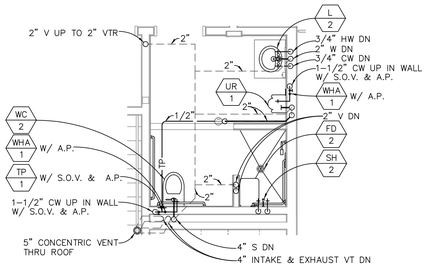

ENLARGED PLUMBING FLOOR PLAN

SCALE 1/4"=1'-0" | 2

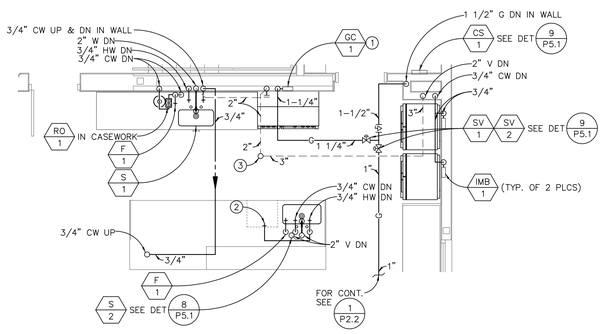

CONSTRUCTION KEY NOTES:

1. P.O.C. 1-1/4" GAS TO RANGE (165 CFH) WITH GAS COCK.
2. DISHWASHER ROUGH-IN & CONNECTION 1/2" HOT WATER WITH S.O.V. & 3/4" HOSE WASTE THRU COUNTER MOUNTED AIR GAP FITTING TO GARBAGE DISPOSER.
3. 3" V UP TO 3" VTR

ENLARGED PLUMBING FLOOR PLAN

SCALE 1/4"=1'-0" | 3

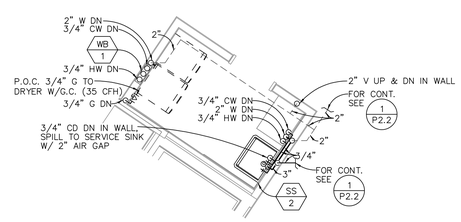

ENLARGED PLUMBING FLOOR PLAN

SCALE 1/4"=1'-0" | 1

Not for permitting or construction

PBK

ARCHITECT PBK Architects, Inc.
PBK.com
SAN LUIS OBISPO
1327 Archer Street, Suite 110
San Luis Obispo, CA 93401
805-528-3076

PDS
PocockDesignSolutions Inc.

FIRE STATION #44
COASTSIDE FIRE PROTECTION DISTRICT

501 STETSON STREET
MOSS BEACH, CA 94038
BID SET

COASTSIDE FIRE PROTECTION DISTRICT EST. 2005

BID SET

KEY PLAN

PLAN NORTH | TRUE NORTH

REGISTERED PROFESSIONAL ENGINEER ANDREW D. GOSSMAN No. M30630 Exp. 12/31/26 MECHANICAL STATE OF CALIFORNIA

CLIENT
COASTSIDE FIRE PROTECTION DISTRICT
PROJECT NUMBER
230137
DATE 3/13/2026
DRAWN BY: KF/OS CHKED BY: AD
REVISIONS

#	DESCRIPTION	DATE

PLUMBING ENLARGED PLANS

This document is for plan review only

P4.2

1/30/2025 4:24:54 PM

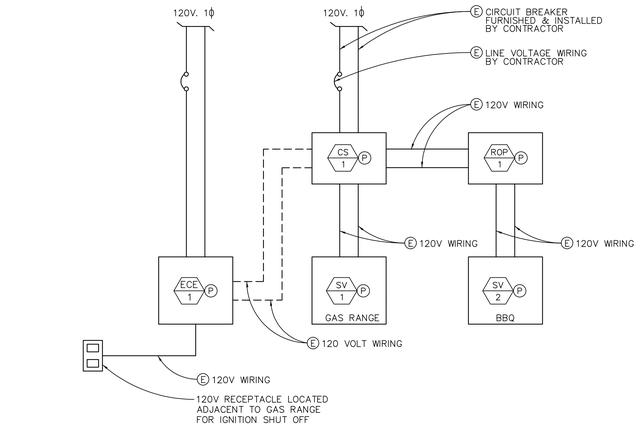

(E) ITEM INDICATED ON THE ELECTRICAL DRAWING AND SPECIFIED IN THE ELECTRICAL SECTIONS OF THE SPECIFICATION.

(P) ITEM INDICATED ON THE PLUMBING DRAWING AND SPECIFIED IN THE PLUMBING SECTIONS OF THE SPECIFICATION.

SOLENOID VALVE WIRING DETAIL

SCALE	
NONE	9

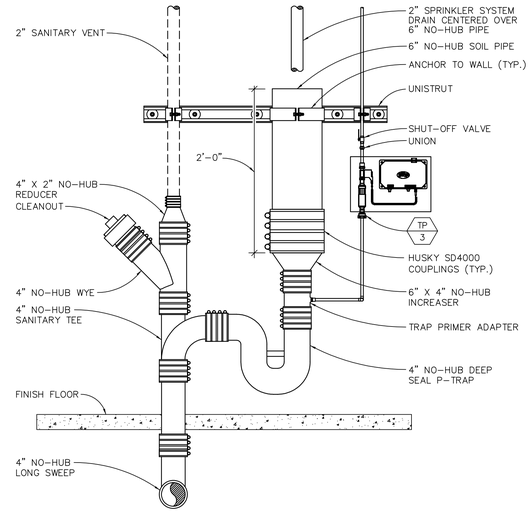

HUB DRAIN DETAIL

SCALE	
NONE	6

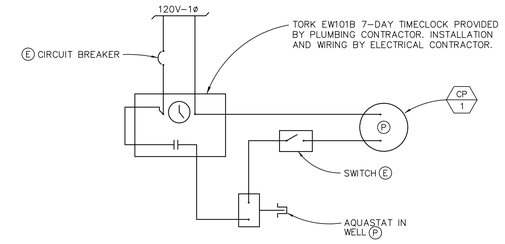

NOTE: ALL CONDUIT AND WIRING SHALL BE PROVIDED BY THE ELECTRICAL CONTRACTOR.

(E) ITEM INDICATED ON THE ELECTRICAL DRAWING AND SPECIFIED IN THE ELECTRICAL SECTIONS OF THE SPECIFICATION.

(P) ITEM INDICATED ON THE PLUMBING DRAWING AND SPECIFIED IN THE WATER HEATER DETAILS.

CIRC. PUMP WIRING DIAGRAM

SCALE	
NONE	3

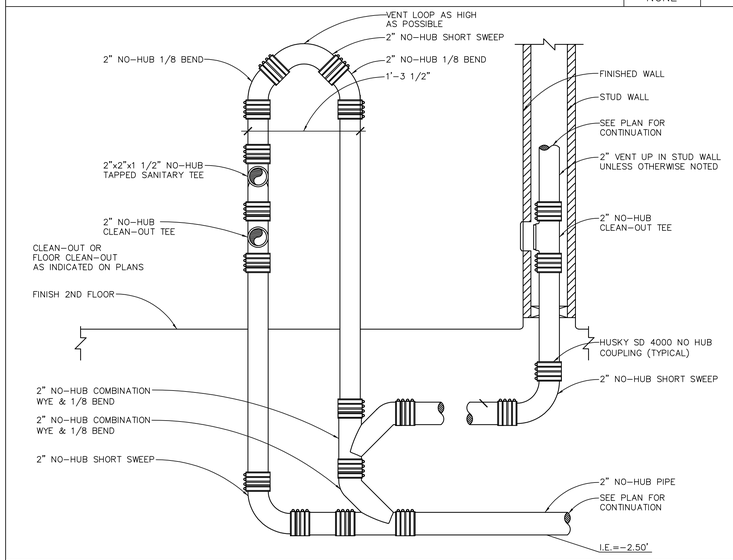

ISLAND VENT DETAIL

SCALE	
NONE	8

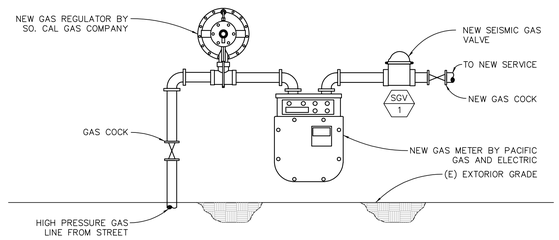

SEISMIC GAS VALVE DETAIL

SCALE	
NONE	5

NOTE:
TERMINATIONS SHALL BE IN ACCORDANCE WITH CURRENT NFPA 54. GAS VENTS THAT ARE 12" OR LESS IN SIZE AND LOCATED NOT LESS THAN 8' FROM A VERTICAL WALL OR SIMILAR OBSTRUCTION SHALL TERMINATE ABOVE THE ROOF IN ACCORDANCE WITH FIGURE 509.6.2. CPC 509.6.2.

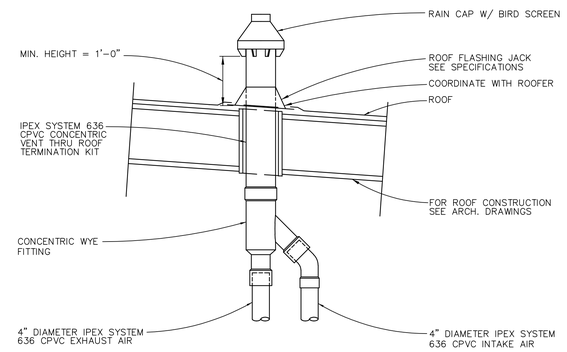

CONCENTRIC VENT THRU ROOF DETAIL

SCALE	
NONE	2

NOTES:

1. ENTIRE INSTALLATION SHALL CONFORM TO THE MANUFACTURERS RECOMMENDATIONS AND SHALL MEET LOCAL JURISDICTION SPECIFICATION AND STANDARDS.
2. SEE SHEET P1.1 FOR LOCATION OF SAND & OIL INTERCEPTOR.

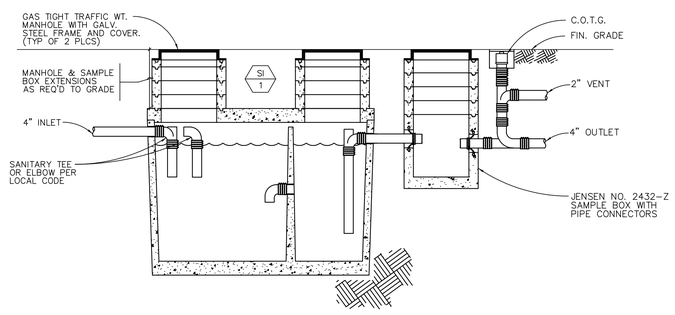

SAND + OIL INTERCEPTOR

SCALE	
NONE	7

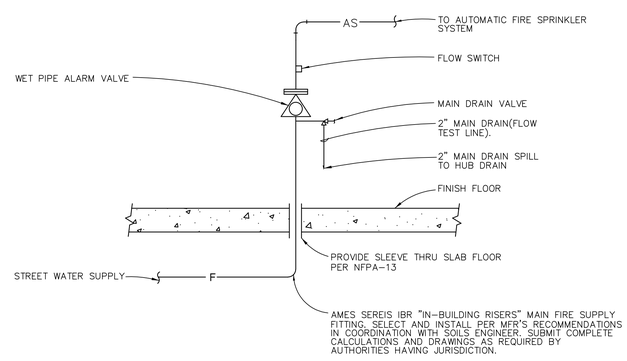

FIRE SPRINKLER RISER DETAIL

SCALE	
NONE	4

NOTE:
WATER HEATER STRAPPING SHALL BE AT POINTS WITHIN THE UPPER ONE-THIRD (1/3) AND LOWER ONE-THIRD (1/3) OF ITS VERTICAL DIMENSIONS. AT THE LOWER POINT, A MINIMUM DISTANCE OF FOUR (4) INCHES SHALL BE MAINTAINED ABOVE THE CONTROLS WITH THE STRAPPING.

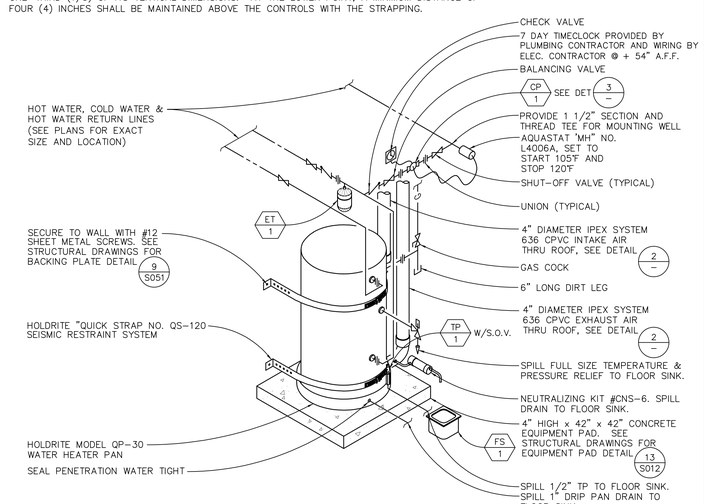

CONCENTRIC VENT WATER HEATER W/CIRC. PUMPDETAIL

SCALE	
NONE	1

1/30/2025 4:24:54 PM

Not for permitting or construction

PBK

ARCHITECT PBK Architects, Inc.
PBK.com
SAN LUIS OBISPO
1327 Archer Street, Suite 110
San Luis Obispo, CA 93401
805-529-3076

PDS
PocockDesignSolutions Inc.

FIRE STATION #44
COASTSIDE FIRE PROTECTION DISTRICT
501 STETSON STREET
MOSS BEACH, CA 94038
BID SET

BID SET

KEY PLAN
PLAN NORTH
TRUE NORTH

REGISTERED PROFESSIONAL ENGINEER ANDREW R. GUSSMAN No. M28828 Exp. 3/31/26 MECHANICAL STATE OF CALIFORNIA

CLIENT
COASTSIDE FIRE PROTECTION DISTRICT
PROJECT NUMBER
230137
DATE 3/13/2026
DRAWN BY: KF/OS CHKED BY: AD
REVISIONS

#	DESCRIPTION	DATE

PLUMBING DETAILS

This document is for plan review only

P5.1

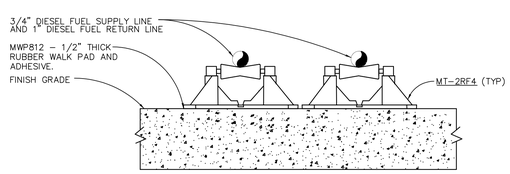

NOTE:
SUPPORTS TO BE AT INTERVALS NOT TO EXCEED THOSE SHOWN ON TABLE 313.1 OF THE 2022 CALIFORNIA PLUMBING CODE.

PIPE STRAPPING DETAIL

SCALE	
NONE	1

Not for permitting or construction

PBK
ARCHITECT PBK Architects, Inc.
PBK.com
SAN LUIS OBISPO
1327 Archer Street, Suite 110
San Luis Obispo, CA 93401
805-329-3076

PDS
PocockDesignSolutions Inc.

FIRE STATION #44
COASTSIDE FIRE PROTECTION DISTRICT

501 STETSON STREET
MOSS BEACH, CA 94038

BID SET

KEY PLAN

PLAN NORTH
TRUE NORTH

REGISTERED PROFESSIONAL ENGINEER
ANDREW R. DUSMAN
No. M28309
Exp. 3/31/26
MECHANICAL
STATE OF CALIFORNIA

CLIENT
COASTSIDE FIRE PROTECTION DISTRICT

PROJECT NUMBER
230137

DATE 3/13/2026

DRAWN BY: KF/OS CHKED BY: AD

REVISIONS

#	DESCRIPTION	DATE

PLUMBING DETAILS

P5.2

This document is for plan review only

1/30/2025 4:24:54 PM

GENERAL NOTES

1. THE CONTRACTOR SHALL SECURE AND PAY FOR PERMITS AND FEES NECESSARY FOR EXECUTION AND COMPLETION OF ELECTRICAL WORK, INCLUDING ALL CHARGES BY THE LOCAL GOVERNMENT AGENCIES.
2. ALL OUTLET LOCATIONS SHALL BE COORDINATED WITH ARCHITECTURAL ELEVATIONS PRIOR TO INSTALLATION.
3. THIS CONTRACTOR SHALL SUPPLY POWER TO AND MAKE CONNECTION TO ALL MOTORS AND EQUIPMENT REQUIRING ELECTRICAL CONNECTIONS AS SHOWN ON THE MECHANICAL AND PLUMBING DRAWINGS, INCLUDING ALL FRACTIONAL HORSEPOWER MOTORS. IT SHALL BE THE RESPONSIBILITY OF THE CONTRACTOR TO REVIEW THE MECHANICAL AND PLUMBING DRAWINGS FOR DUCTS, LINES AND EQUIPMENT.
4. SEE SINGLE LINE DIAGRAM FOR CONDUIT AND CONDUCTOR SIZES, PANELS, MECHANICAL EQUIPMENT, ETC. HOMERUNS TO PANELS MAY NOT BE SHOWN ON PLANS BUT ARE A PART OF THIS CONTRACT.
5. EXACT LOCATION OF ALL CEILING MOUNTED DEVICES SHALL BE AS INDICATED ON THE ARCHITECTURAL REFLECTED CEILING PLANS.
6. UNLESS OTHERWISE NOTED, OR REQUIRED BY ADA MOUNTING HEIGHTS INDICATED ON ELECTRICAL OUTLETS ARE FROM FINISHED FLOOR TO CENTER OF OUTLETS.
7. THE CONTRACTOR SHALL BE RESPONSIBLE FOR CUT-OUTS IN TILE OR COUNTER SPLASHES WHERE RECEPTACLES, OUTLETS, ETC., OCCUR.
8. ALL RECESSED DEVICES, ETC., MOUNTED IN FIRE RATED CEILING SHALL BE ENCLOSED WITH AN APPROVED ENCLOSURE CARRYING THE SAME FIRE RATING AS THE CEILING.
9. ALL SURFACE MOUNTED LIGHTING FIXTURES SHALL BE APPROVED FOR DIRECT MOUNTING ON LOW DENSITY COMBUSTIBLE CEILINGS.
10. THE NUMERAL(S) SHOWN AT TOP LIGHT FIXTURE IDENTIFICATION SYMBOL WHICH INDICATES NUMBER OF LIGHT FIXTURES REQUIRED SHALL NOT BE USED BY THE CONTRACTOR FOR HIS QUANTITY TAKE-OFF AT BIDDING OR FOR DETERMINATION OF HOW MANY FIXTURES SHALL BE INSTALLED. THE CONTRACTOR SHALL INSTALL A LIGHT FIXTURE WHEREVER A FIXTURE OUTLET IS SHOWN ON DRAWINGS.
11. NO CONDUIT SHALL BE RUN HORIZONTALLY IN CONCRETE FLOOR SLABS.
12. ALL WIRING AND ELECTRICAL EQUIPMENT INSTALLED FOR MECHANICAL AND PLUMBING EQUIPMENT SHALL BE IN ACCORDANCE WITH THESE DRAWINGS AND THE WIRING DIAGRAMS OF THE MECHANICAL AND PLUMBING DRAWINGS.
13. ALL FINAL CONNECTIONS TO OWNER-FURNISHED EQUIPMENT SHALL BE MADE BY THE CONTRACTORS.
14. <u>MEP COMPONENT ANCHORAGE NOTE</u>

    ALL MECHANICAL, PLUMBING, AND ELECTRICAL COMPONENTS SHALL BE ANCHORED AND INSTALLED PER THE DETAILS ON THE DSA APPROVED CONSTRUCTION DOCUMENTS. THE FOLLOWING COMPONENTS SHALL BE ANCHORED OR BRACED TO MEET THE FORCE AND DISPLACEMENT REQUIREMENTS PRESCRIBED IN THE 2022 CBC, SECTIONS 1617A.1.18 THROUGH 1617A.1.26 AND ASCE 7-16 CHAPTERS 13, 26 AND 30:

    1. ALL PERMANENT EQUIPMENT AND COMPONENTS.
    2. TEMPORARY, MOVABLE OR MOBILE EQUIPMENT THAT IS PERMANENTLY ATTACHED (E.G. HARD WIRED) TO THE BUILDING UTILITY SERVICES SUCH AS ELECTRICITY, GAS OR WATER. "PERMANENTLY ATTACHED" SHALL INCLUDE ALL ELECTRICAL CONNECTIONS EXCEPT PLUGS FOR 120/230 VOLT RECEPTACLES HAVING FLEXIBLE CABLE.
    3. TEMPORARY, MOVABLE OR MOBILE EQUIPMENT WHICH IS HEAVIER THAN 400 POUNDS OR HAS A CENTER OF MASS LOCATED 4 FEET OR MORE ABOVE THE ADJACENT FLOOR OR ROOF LEVEL THAT DIRECTLY SUPPORT THE COMPONENT IS REQUIRED TO BE RESTRAINED IN A MANNER APPROVED BY DSA.

    THE FOLLOWING MECHANICAL AND ELECTRICAL COMPONENTS SHALL BE POSITIVELY ATTACHED TO THE STRUCTURE BUT NEED NOT DEMONSTRATE DESIGN COMPLIANCE WITH THE REFERENCE NOTED ABOVE. THESE COMPONENTS SHALL HAVE FLEXIBLE CONNECTIONS PROVIDED BETWEEN THE COMPONENT AND ASSOCIATED DUCTWORK, PIPING, AND CONDUIT. FLEXIBLE CONNECTIONS MUST ALLOW MOVEMENT IN BOTH TRANSVERSE AND LONGITUDINAL DIRECTIONS:

    A. COMPONENTS WEIGHING LESS THAN 400 POUNDS AND HAVE A CENTER OF MASS LOCATED 4 FEET OR LESS ABOVE THE ADJACENT FLOOR OR ROOF LEVEL THAT DIRECTLY SUPPORT THE COMPONENT.

    B. COMPONENTS WEIGHING LESS THAN 20 POUNDS, OR IN THE CASE OF DISTRIBUTED SYSTEMS, LESS THAN 5 POUNDS PER FOOT, WHICH ARE SUSPENDED FROM A ROOF OR FLOOR OR HUNG FROM A WALL.

    FOR THOSE ELEMENTS THAT DO NOT REQUIRE DETAILS ON THE APPROVED DRAWINGS, THE INSTALLATION SHALL BE SUBJECT TO THE APPROVAL OF THE DESIGN PROFESSIONAL IN GENERAL RESPONSIBLE CHARGE OR STRUCTURAL ENGINEER DELEGATED RESPONSIBILITY AND THE DSA DISTRICT STRUCTURAL ENGINEER. THE PROJECT INSPECTOR WILL VERIFY THAT ALL COMPONENTS AND EQUIPMENT HAVE BEEN ANCHORED IN ACCORDANCE WITH ABOVE REQUIREMENTS.

    <u>MEP DISTRIBUTION SYSTEM BRACING NOTE FOR PIPING, DUCTWORK, AND ELECTRICAL CONDUIT</u>

    PIPING, DUCTWORK, AND ELECTRICAL DISTRIBUTION SYSTEMS SHALL BE BRACED TO COMPLY WITH THE FORCES AND DISPLACEMENTS PRESCRIBED IN ASCE 7 SECTION 13.3 AS DEFINED IN ASCE 7 SECTIONS 13.6.5, 13.6.6, 13.6.7, 13.6.8, AND 2022 CBC SECTIONS 1617A.1.24, 1617A.1.25, AND 1617A.1.26.

    THE METHOD OF SHOWING BRACING AND ATTACHMENTS TO THE STRUCTURE FOR THE IDENTIFIED DISTRIBUTION SYSTEMS ARE AS NOTED BELOW. THE MEP DESIGN PROFESSIONAL ENGINEER RESPONSIBLE FOR CONTENT ON THESE SHEETS HAS VERIFIED THAT THE DESIGN METHODS IDENTIFIED BELOW ARE IN ACCORDANCE WITH DSA IR 16-13.

    MECHANICAL PIPING (MP), MECHANICAL DUCTS (MD), PLUMBING PIPING (PP), ELECTRICAL DISTRIBUTION SYSTEM (E).

    MP ☐MD ☐PP ☐ E ☒ - OPTION 1: PROJECT-SPECIFIC DESIGN.

    MP ☐MD ☐PP ☐ E ☐ - OPTION 2: DESIGN BASED ON OSHPD OPM, WITHIN PROJECT SUBMITTAL.

    MP ☐MD ☐PP ☐ E ☐ - OPTION 3: DESIGN BASED ON OSHPD OPM, DEFERRED SUBMITTAL.
15. THE CONTRACTOR SHALL VISIT THE SITE INCLUDING SPECIFICALLY ALL AREAS INDICATED ON THE DRAWINGS. HE SHALL THOROUGHLY FAMILIARIZE HIMSELF WITH THESE EXISTING CONDITIONS AND BY SUBMITTING A BID ACCEPTS CONDITIONS UNDER WHICH HE WILL BE REQUIRED TO PERFORM HIS WORK.
16. IT SHALL BE THIS CONTRACTOR'S RESPONSIBILITY TO DO ALL CORING, CUTTING, PATCHING AND REFINISHING OF WALLS AND SURFACES WHEREVER IT IS NECESSARY FOR HIM TO PENETRATE FOR HIS WORK. ALL OPENINGS MADE SHALL BE SEALED TO MEET THE RATED INTEGRITY OF THE PARTICULAR WALL, FLOOR OR CEILING.
17. ATTENTION IS CALLED TO THE FACT THAT THE CEILING SYSTEMS FOR THE MOST PART ARE CONSIDERED TO BE INACCESSIBLE. THE CONTRACTOR SHALL STRATEGICALLY LOCATE BOXES, ETC., IN AN ACCESSIBLE CEILING SPACE.
18. WHERE EXPOSED CONDUIT IS PERMITTED BY THE ARCHITECT, SUCH CONDUIT SHALL BE PAINTED TO MATCH FINISH OF SURFACE TO WHICH IT IS ATTACHED/SUPPORTED TO.
19. INSTALL RACEWAY SYSTEMS AS FOLLOWS:

    A. RIGID GALVANIZED STEEL IN ALL OUTDOOR LOCATIONS AND IN INDOOR LOCATIONS WHERE SUBJECT TO PHYSICAL DAMAGE.

    B. I.M.C. OR E.M.T. IN ALL INDOOR AREAS.

    C. FLEXIBLE METAL CONDUIT TO LIGHT FIXTURES, MOTORS AND VIBRATING ELECTRICAL EQUIPMENT IN A WHIP 6' OR LESS APPLICATION ONLY. NO RUNS ANYWHERE INCLUDING WOOD FRAMING. ANY WEARYING FROM THAT SHOULD REQUIRE AN APPROVAL FROM BUILDINGS.

    D. PVC CONDUIT FOR UNDERGROUND RUNS. USE 20 MIL PVC TAPED RIGID STEEL RISER ELBOWS AND RISERS FOR CONDUIT STUB-UPS.

    E. USE COMPRESSION TYPE FITTINGS FOR ALL METALLIC CONDUIT.

    F. 1" CONDUIT MINIMUM FOR UNDERGROUND INSTALLATIONS. 3/4" MIN. ABOVE GROUND.

    G. NO MC CABLE ALLOWED.
20. CONDUIT ROUTING INDICATED ON THESE PLANS IS DIAGRAMMATIC. ACTUAL ROUTING OF CONDUITS SHALL BE COORDINATED IN THE FIELD TO AVOID INTERFERENCE WITH OTHER UTILITIES AND TRADES. THE CONTRACTOR SHALL INSTALL ALL CONDUIT, JUNCTION/PULL BOXES, ETC., AS REQUIRED FOR A COMPLETE SYSTEM IN FULL COMPLIANCE WITH ALL APPLICABLE CODES.
21. ALL EXTERIOR MOUNTED EQUIPMENT SHALL BE WEATHERPROOF OR PROVIDED IN A WEATHERPROOF ENCLOSURE.
22. ALL POWER AND LIGHTING BRANCH CIRCUITS SHALL BE INSTALLED WITH A #12 GREEN GROUND WIRE MIN. THE COMPLETE ELECTRICAL SYSTEM SHALL BE GROUNDED IN ACCORDANCE WITH ARTICLE 250 OF THE CALIFORNIA ELECTRICAL CODE (CEC).
23. IDENTIFICATION NAME PLATES FOR BRANCH CIRCUIT PANELS SHALL MATCH THE NOMENCLATURE PROVIDED BY THE OWNER AT THE END OF THE CONTRACT.
24. UNLESS SPECIFICALLY SHOWN ON THESE PLANS NO STRUCTURAL MEMBER SHALL BE CUT, DRILLED, NOR NOTCHED WITHOUT PRIOR WRITTEN AUTHORIZATION FROM THE STRUCTURAL ENGINEER.
25. ALL ELECTRICAL EQUIPMENT SHALL BE LISTED AND LABELED FOR THEIR USE.
26. WHERE MORE THAN ONE NOMINAL VOLTAGE SYSTEM EXISTS IN A BUILDING, EACH UNDERGROUND SYSTEM CONDUCTOR SHALL BE IDENTIFIED BY PHASE AND SYSTEM. THE MEANS OF IDENTIFICATION SHALL BE PERMANENTLY POSTED AT EACH BRANCH CIRCUIT PANELBOARD. THE PHASE COLOR CODING OF THE INSULATION OF CONDUCTORS SHALL BE: A) BROWN-ORANGE-YELLOW FOR 480/277-VOLTS. B) BLACK-RED-BLUE FOR 208/120-VOLTS.
27. PROVIDE THE SHORT CIRCUIT CURRENT RATING OF THE ELECTRICAL SERVICE IN A LETTER FROM SCE. THE PANELBOARD(S) AND/OR CIRCUIT BREAKERS SHALL MEET OR EXCEED THE S.C.C RATING. A POINT-TO-POINT GROUND-FAULT AND SHORT-CIRCUIT CALCULATIONS MAY BE REQUIRED TO SUBSTANTIATE THE RATINGS OF THE ELECTRICAL EQUIPMENT.
28. ALL CONTROLS AND SWITCHES INTENDED TO BE USED BY THE OCCUPANT OF THE ROOM OR AREA TO CONTROL LIGHTING AND RECEPTACLE OUTLETS, APPLIANCES OR COOLING, HEATING AND VENTILATING EQUIPMENT, SHALL LOCATED NO MORE THAN 48 INCHES MEASURED FROM THE TOP OF THE JUNCTION OR DEVICE BOX NOR LESS THAN 15 INCHES MEASURED TO THE BOTTOM OF THE JUNCTION OR DEVICE BOX ABOVE THE FINISHED FLOOR.
29. ALL RECEPTACLES OUTLETS ON BRANCH CIRCUITS OF 30-AMPERES OR LESS AND COMMUNICATION SYSTEM RECEPTACLES SHALL BE LOCATED NO MORE THAN 48 INCHES MEASURED FROM THE TOP OF THE RECEPTACLE OUTLET BOX OR RECEPTACLE HOUSING NOR LESS THAN 15 INCHES MEASURED TO THE BOTTOM OF THE RECEPTACLE OUTLET BOX OR RECEPTACLE HOUSING ABOVE THE FINISHED FLOOR.
30. LIGHTING FIXTURES INSTALLED IN A SUSPENDED CEILING SHALL BE FASTENED TO THE CEILING FRAMING MEMBER AT ALL FOUR CORNERS WITH SCREWS AND ATTACHED #12 CEILING WIRES TO THE LIGHT FIXTURE AT DIAGONALLY OPPOSITE CORNERS AND TO THE STRUCTURAL CEILING.
31. ALL CONDUCTOR TO BE COPPER, TYPE THWN/THHN OR XHHW (75/90 DEGREES C).
32. ALL EQUIPMENT TO BE U.L. LISTED OR EQUIVALENT.
33. PROVIDE ACCESS PANELS.
34. EMERGENCY LIGHTING FACILITIES SHALL BE ARRANGED TO PROVIDE INITIAL ILLUMINATION THAT IS AT LEAST AN AVERAGE OF 1 FOOTCANDLE (11 LUX) AND A MINIMUM AT ANY POINT OF 0.1 FOOTCANDLE (1 LUX) MEASURED ALONG THE PATH OF EGRESS AT FLOOR LEVEL. ILLUMINATION LEVELS SHALL BE PERMITTED TO DECLINE TO 0.6 FOOT CANDLE (6 LUX) AVERAGE AND A MINIMUM AT ANY POINT OF 0.06 FOOT CANDLE (0.6 LUX) AT THE END OF THE EMERGENCY LIGHTING TIME DURATION. A MAXIMUM-TO-MINIMUM ILLUMINATION UNIFORMITY RATIO OF 40 TO 1 SHALL NOT BE EXCEEDED. SECTION 1006.3.1 CFC
35. THE MEANS OF EGRESS ILLUMINATION LEVEL SHALL NOT BE LESS THAN 1 FOOT CANDLE (11 LUX) AT THE WALKING SURFACE LEVEL. IN THE EVENT OF POWER SUPPLY FAILURE, AN EMERGENCY ELECTRICAL SYSTEM SHALL AUTOMATICALLY ILLUMINATE THE FOLLOWING AREAS:

    A. AISLES AND UNENCLOSED EGRESS STAIRWAYS IN ROOMS AND SPACES THAT REQUIRE TWO OR MORE MEAN OF EGRESS.

    B. CORRIDORS, EXIT ENCLOSURES AND EXIT PASSAGEWAYS IN BUILDINGS REQUIRED TO HAVE TWO OR MORE EXITS.

    C. EXTERIOR EGRESS COMPONENTS AT OTHER THAN THE LEVEL OF EXIT DISCHARGE UNTIL EXIT DISCHARGE IS ACCOMPLISHED FOR BUILDINGS REQUIRED TO HAVE TWO OR MORE EXITS.

    D. INTERIOR EXIT DISCHARGE ELEMENTS, AS PERMITTED IN SECTION 1024.1, IN BUILDINGS REQUIRED TO HAVE TWO OR MORE EXITS.

    E. EXTERIOR LANDINGS, AS REQUIRED BY SECTION 1008.1.5, FOR EXIT DISCHARGE DOORWAYS IN BUILDINGS REQUIRED TO HAVE TWO OR MORE EXITS.

    F. THE EMERGENCY POWER SYSTEM SHALL PROVIDE POWER FOR DURATION OF NOT LESS THAN 90 MINUTES AND SHALL CONSIST OF STORAGE BATTERIES, UNIT EQUIPMENT OR AN ON-SITE GENERATOR. THE INSTALLATION OF THE EMERGENCY POWER SYSTEM SHALL BE IN ACCORDANCE WITH SECTION 2702.
36. LIGHTING AT EXTERIOR DOORWAYS SHALL BE MAINTAINED AT A MINIMUM OF 1 FOOT CANDLE AT GROUND WITH VANDAL PROOF LENSES.
37. ELECTRIC CIRCUITS SERVING CONTROLLED RECEPTACLES SHALL BE EQUIPPED WITH AUTOMATIC SHUT-OFF CONTROLS FOLLOWING THE REQUIREMENTS PRESCRIBED IN SECTION 130.1(c.1) (1 THROUGH 3); AND AT LEAST ONE CONTROLLED RECEPTACLE TO BE INSTALLED WITHIN 6 FEET FROM EACH UNCONTROLLED RECEPTACLE OR A SPLIT WIRED DUPLEX RECEPTACLE WITH ONE CONTROLLED AND ONE UNCONTROLLED RECEPTACLE SHALL BE INSTALLED, AND CONTROLLED RECEPTACLES SHALL HAVE A PERMANENT MARKING TO DIFFERENTIATE THEM FROM UNCONTROLLED RECEPTACLES, AND FOR OPEN OFFICE AREAS, CONTROLLED CIRCUITS SHALL BE PROVIDED AND MARKED TO SUPPORT INSTALLATION AND CONFIGURATION OF OFFICE FURNITURE WITH RECEPTACLES THAT COMPLY WITH SECTION 130.5(a)1, 2, AND 3.
38. CONTRACTOR TO PROVIDE ENGRAVED LABELING AT EACH RECEPTACLE, DATA OUTLET, JUNCTION BOX, DISCONNECT SWITCH, ECT. DISPLAYING THE IDF OR PANEL (WITH CIRCUIT) FEEDING THE DATA OUTLET, RECEPTACLE, JUNCTION BOX, DISCONECT SWITCH, ECT.

REFERENCES & ABBREVIATIONS

	DETAIL REFERENCE	MCB	MAIN CIRCUIT BREAKER
1	KEYNOTE REFERENCE	FLA	FULL LOAD AMPS
A.F.F.	ABOVE FINISH FLOOR	C.	CONDUIT
U.O.N.	UNLESS OTHERWISE NOTED	V.	VOLTS
C.O.	CONDUIT ONLY W/PULL ROPE	A	AMPS
WP	WEATHER PROOF	GFI	GROUND FAULT INTERRUPTER
CU.	COPPER	GND	GROUND
M.L.O.	MAIN LUGS ONLY	V.L.	VERIFY LOCATION
E or (E)	EXISTING TO REMAIN	A.C.	ABOVE COUNTER
		N.L.	NIGHT LIGHT
		EM.	EMERGENCY

APPLICABLE CODES
ALL WORK SHALL BE PERFORMED IN ACCORDANCE WITH ALL APPLICABLE LAWS AND REGULATIONS, AND THE REQUIREMENTS OF THE CALIFORNIA CODE OF REGULATIONS (C.C.R.), TITLE 24, INCLUSIVE OF:
2022 CALIFORNIA ADMINISTRATIVE CODE (CAC), PART 1, TITLE 24 C.C.R.
2022 CALIFORNIA BUILDING CODE (CBC), PART 2, TITLE 24 C.C.R. (2021 INTERNATIONAL BUILDING CODE, VOL. 1 & 2, AND 2022 CALIFORNIA AMENDMENTS)
2022 CALIFORNIA ELECTRICAL CODE (CEC), PART 3, TITLE 24 C.C.R. (2020 NATIONAL ELECTRICAL CODE AND 2022 CALIFORNIA AMENDMENTS)
2022 CALIFORNIA ENERGY CODE (CEC), PART 6, TITLE 24 C.C.R.
2022 CALIFORNIA FIRE CODE (CFC), PART 9, TITLE 24 C.C.R. (2018 INTERNATIONAL FIRE CODE AND 2022 CALIFORNIA AMENDMENTS)
2022 CALIFORNIA GREEN BUILDING STANDARDS CODE (CALGREEN), PART 11, TITLE 24 C.C.R.
2022 CALIFORNIA REFERENCED STANDARDS CODE, PART 12, TITLE 24 C.C.R.
TITLE 19 C.C.R. PUBLIC SAFETY, STATE FIRE MARSHAL REGULATIONS
2019 ASME A17.1/CSA B44-13 SAFETY CODE FOR ELEVATORS AND ESCALATOR
NFPA 72 - NATIONAL FIRE ALARM AND SIGNALING CODE (CA AMENDED) 2016 ED.
NFPA 80 - STANDARD FOR FIRE DOORS AND OTHER OPENING PROTECTIVES 2020 ED.
APPLICABLE REQUIREMENTS OF THE SOUTH COAST AIR QUALITY MANAGEMENT DISTRICT (SCAQMD).

FIRE ALARM DEFERRED APPROVAL NOTE
THE FIRE ALARM SYSTEM IS A DEFERRED APPROVAL ITEM AND THE SOLE RESPONSIBILITY OF THE CONTRACTOR TO SUBMIT PLANS, EQUIPMENT DATA SHEETS/LISTINGS, WIRING DIAGRAMS AND CALCULATIONS TO THE CITY OF COASTSIDE FIRE DEPARTMENT FOR REVIEW AND APPROVAL. THE CONTRACTOR SHALL OBTAIN APPROVAL FROM THE CITY OF ORANGE FIRE DEPARTMENT PRIOR TO INSTALLING THE FIRE ALARM SYSTEM COMPONENTS.
FIRE ALARM SYSTEM DEVICES AND COMPONENTS INDICATED ON THE DRAWINGS ARE THE MINIMUM REQUIREMENTS, THE CONTRACTOR SHALL BE RESPONSIBLE FOR PROVIDING THE QUANTITY AND TYPE OF DEVICES REQUIRED BY THE CITY OF ORANGE FIRE DEPARTMENT AT NO ADDITIONAL COST TO THE CONTRACT.
THE FIRE ALARM SYSTEM DRAWINGS SHALL BEAR THE STAMP AND SIGNATURE OF A STATE OF CALIFORNIA PROFESSIONAL ELECTRICAL ENGINEER.

SYMBOL LIST

- CONDUIT RUN, CONCEALED IN CEILING, WALLS OR UNDER FLOOR 3/4" MIN.
- CONDUIT RUN, UNDERGROUND.
- CONDUIT STUBBED OUT AND CAPPED. PULL LINE IN PLACE.
- FLEXIBLE CONDUIT. SEALTITE WHERE EXPOSED TO WEATHER. REFER TO SPECIFICATIONS FOR USE.
- CONDUIT TURNED DOWN.
- CONDUIT TURNED UP.
- #10 — CROSS LINES ON CONDUIT RUNS INDICATE NUMBER OF #12 WIRES CONTAINED THEREIN. TWO #12 ARE TO BE PROVIDED WHEN CROSS LINES ARE NOT SHOWN. NUMERALS ADJACENT TO CROSS LINES ON CONDUIT RUNS INDICATE SIZE OF CONDUCTORS IN LIEU OF #12. PROVIDE CONDUIT SIZE AS REQUIRED TO ACCOMMODATE THE WIRE SIZE TO BE CONTAINED THEREIN.
- B-1,3 — CONDUIT HOME RUN TO PANELBOARD. LETTER AND NUMERALS INDICATES ELECTRICAL PANEL AND CIRCUIT NUMBER.
- CAT 5 CABLE IN DEDICATED CONDUIT.
- DW — 3/4"C. WITH 2/C#18 CLASS 2 DATA WIRE PER SWITCH LEG (DIMMING CONTROLS). QUANTITY OF CROSS TICKS REPRESENT QUANTITY OF SWITCH LEGS WITHIN CONDUIT.
- REGESSED MOUNTED BRANCH CIRCUIT PANEL. OUTDOOR TO BE NEMA 3R.
- SURFACE MOUNTED BRANCH CIRCUIT PANEL. OUTDOOR TO BE NEMA 3R.
- MOLDED CASE CIRCUIT BREAKER (SINGLE LINE DIAGRAM).
- AT — CIRCUIT BREAKER AMPERE TRIP RATING (SINGLE LINE DIAGRAM).
- GROUND.
- M — UTILITY METER AND SOCKET (SINGLE LINE DIAGRAM).
- WP — WEATHERPROOF.
- DUPLEX RECEPTACLE, FLUSH IN WALL. GROUNDING TYPE (20 AMP, 120V., WALL PLATE TO MATCH DEVICE) MTD. AT +18".
- DUPLEX RECEPTACLE, FLUSH IN WALL (20 AMP, 120 V., WALL PLATE TO MATCH DEVICE) MTD. AT +18".
- GFI — DUPLEX RECEPTACLE, WITH GROUND FAULT INTERRUPTER (20 AMP, 120V., 3W, WALL PLATE TO MATCH DEVICE) MTD. AT +18".
- SPECIALTY RECEPTACLE/OUTLET. COORDINATE EXACT REQUIREMENTS WITH EQUIPMENT VENDOR/SUPPLIER. WHERE A RECEPTACLE IS REQUIRED PROVIDE COMPLETE WITH STAINLESS STEEL WALL PLATE AND VOLTAGE, AMPERE RATING AND CONFIGURATION TO MATCH VENDOR SUPPLIED PLUG. WHERE HARD WIRED CONNECTION IS REQUIRED PROVIDE STAINLESS STEEL WALL PLATE WITH GROMMETT AND SEAL-TITE FLEXIBLE CONDUIT AND CONDUCTORS FOR FINAL CONNECTION TO THE VENDOR SUPPLIED EQUIPMENT. MTD. AT +18".
- F — DOUBLE DUPLEX GROUNDING RECEPTACLE FLUSH IN FLOOR. PROVIDE COMPLETE WITH FULLY ADJUSTABLE 2-GANG FLOOR BOX, COLLAR ASSEMBLY, CARPET FLANGE AND BRASS COVERS. WIREMOLD OMNIBOX 880 SERIES OR APPROVED EQUAL.
- C — CEILING MOUNTED CORD REEL. 20 AMP CABLE REEL SHALL CONSIST OF A HEAVY DUTY REEL WITH 50 FOOT LONG 3-CONDUCTOR #10 TYPE SJEOOW CORD/CABLE AND CONNECTOR TO MATCH THE ENSINE AUTO ELECT. REELCRAFT #L5550-123-X REEL AND KUSSMAUL #5-20P-H CONNECTOR. PROVIDE 20A 120V. FLUSH MOUNTED CEILING RECEPTACLE TO PROVIDE POWER TO THE REEL.
- H-O-A — COMBINATION FUSED DISCONNECT SWITCH AND MAGNETIC MOTOR STARTER. ROMAN NUMERAL INDICATES THE STARTER SIZE. H-O-A INDICATES DOOR MOUNTED HAND-OFF-AUTO SELECTOR SWITCH. FUSES AND OVERLOADS SHALL BE SIZED PER THE EQUIPMENT NAME PLATE.
- AS/P — DISCONNECT SWITCH. HEAVY DUTY TYPE WITH REQUIRED. AS=SWITCH AMPERE RATING. P=NUMBER OF POLES.
- 2/Ø — DATA OUTLET WITH OPEN-BACKED 4" SQUARE BACKBOX AND (1) 3/4"C. STUB-UP INTO THE ACCESSIBLE CEILING. MOUNTED AT +18" A.F.F.-U.O.N. X1=48" A.F.F. FIRST NUMERAL INDICATES QUANTITY OF "CAT 6" DATA CABLE DROPS TO BE PROVIDED AND TERMINATED. SECOND NUMERAL INDICATES QUANTITY OF "CAT 6" VOICE CABLE DROPS TO BE PROVIDED AND TERMINATED. THIRD NUMERAL INDICATES QUANTITY OF BLANK POSITIONS TO BE PROVIDED ON THE WALL PLATE. QUANTITY OF "RJ45" CONNECTORS TO BE PROVIDED SHALL MATCH THE QUANTITY OF CABLE DROPS.
- GAP — GENERATOR REMOTE ALARM PANEL
- EPO — REMOTE EMERGENCY SHUT-OFF PUSH BUTTON. MANUAL RE-SET TYPE WITH MUSHROOM HEAD OPERATOR. PROVIDE IN WEATHERPROOF ENCLOSURE. MOUNT AT +48" TO TOP OF BOX.
- ES — EMERGENCY SHUT-OFF PUSH BUTTON. MANUAL RE-SET TYPE WITH MUSHROOM HEAD OPERATOR. PROVIDE IN WEATHERPROOF ENCLOSURE. MOUNT ON GENERATOR ENCLOSURE AT +48"TO TOP OF BOX.
- K — SECURITY KEY PAD IDENTIFICATION SYMBOL.
- AC 1 — HVAC EQUIPMENT DESIGNATION. SEE MECHANICAL PLANS.
- J — JUNCTION BOX.
- LED STRIP LIGHT FIXTURES. SHADING INDICATES FIXTURE WITH EMERGENCY BATTERY PACK.
- POLE MOUNTED AREA LIGHTING FIXTURE
- LED LIGHT FIXTURE. SHADING INDICATES FIXTURE TO BE PROVIDED WITH EMERGENCY BATTERY PACK.
- WALL MOUNTED LED SCONCE FIXTURE. SHADING INDICATES FIXTURE TO BE PROVIDED WITH EMERGENCY BATTERY PACK.
- CEILING MOUNTED PENDANT FIXTURE. SHADING INDICATES FIXTURE WITH EMERGENCY BATTERY PACK.
- SLOT RECESSED LED FIXTURE
- BOLLARD LED FIXTURE
- OS — AUTOMATIC LIGHTING CONTROL SYSTEM OCCUPANT SENSOR. CEILING MOUNTED.
- DS — AUTOMATIC LIGHTING CONTROL SYSTEM DAYLIGHT SENSOR. CEILING MOUNTED.
- CEILING OR PENDANT MOUNTED LIGHT FIXTURE. SHADING INDICATES LIGHT FIXTURE WITH EMERGENCY BATTERY PACK.
- LV-• — BUILDING LIGHTING SHUT-OFF CONTROL SYSTEM LOW VOLTAGE BY-PASS SWITCH. NUMERAL INDICATES THE ZONE CONTROLLED.
- CEILING / WALL-SWITCH — DUAL TECHNOLOGY OCCUPANT SENSOR WITH 2000 SQUARE FOOT COVERAGE. COORDINATE EXACT LOCATION IN THE FIELD WITH THE SENSOR MANUFACTURER TO ENSURE OPTIMUM SENSOR OPERATION. COVERAGE TO BE DETERMINED BY THE SENSOR APPLICATION INDICATED ON PLAN. PROVIDE SLAVE-PACK WHERE TWO CIRCUITS ARE TO BE CONTROLLED. PROVIDE TWO-CIRCUIT (qb) TYPE WALL-SWITCH TYPE SENSOR WHERE INDICATED ON PLAN. WALL SWITCH SENSOR SHALL BE WATT-STOPPER RWV-200 COLOR AS SELECTED BY THE ARCHITECT. CEILING SENSOR SHALL BE WATT-STOPPER #DT-355.
- CEILING MOUNTED PENDANT DECORATIVE FIXTURE.
- CEILING MOUNTED PENDANT DECORATIVE FIXTURE.
- EXIT SIGN.
- TV — TV SYSTEM WALL-TAP WITH 4" SQUARE BACKBOX AND 3/4" CONDUIT STUB-UP INTO CEILING SPACE.
- WAP — WIRELESS ACCESS POINT
- A — AQUA STAT
- TC — TIME CLOCK
- AV — AUDIO VISUAL OUTPUT FOR GEST ELECTRONIC DEVICES.
- $_m$ — MANUAL MOTOR STARTER WITH THERMAL OVERLOAD. RATING AND NUMBER OF POLES PER THE EQUIPMENT NAMEPLATE DATA.
- A 3 +20"-0" — LIGHTING FIXTURE IDENTIFICATION SYMBOL. LETTER INDICATES TYPE OF FIXTURE. NUMERAL AT TOP OF HEXAGON INDICATES NUMBER OF FIXTURES REQUIRED. NUMBER AT BOTTOM OF HEXAGON INDICATES MOUNTING HEIGHT FROM FLOOR TO BOTTOM OF FIXTURE. OMISSION OF MOUNTING HEIGHT INDICATES CEILING MOUNTING.
- S_a^3 — SINGLE POLE SWITCH, LETTER AT BOTTOM INDICATES OUTLETS CONTROLLED. MOUNTED AT +48" TO TOP OF THE BOX. STAINLESS STEEL WALL PLATE. SUPERSCRIPT DENOTES:
  - 2 - DOUBLE POLE
  - 3 - THREE WAY
  - 4 - FOUR WAY
  - P - PILOT LIGHT
  - K - KEY OPERATED
  - T - TIMER
- - — ELECTRICAL NOTE CALLOUT.
- X E4X — ELECTRICAL DETAIL CALLOUT.
- F — COMBINATION TELEPHONE/DATA OUTLET FLUSH IN FLOOR. PROVIDE COMPLETE WITH FULLY ADJUSTABLE 2-GANG FLOOR BOX, COLLAR ASSEMBLY, CARPET FLANGE AND BRASS COVERS. WIREMOLD OMNIBOX 880 SERIES OR APPROVED EQUAL. ROUTE AND TERMINATE TWO (2) "CAT 6" DATA CABLES AND ONE (1) "CAT 3" TELEPHONE CABLE. QUANTITY OF CONNECTORS TO MATCH QUANTITY OF CABLES.
- T — THERMOSTAT. MOUNTED AT +48" A.F.F. TO TOP OF BOX. SEE MECHANICAL.

A&F ENGINEERING GROUP, INC.
9320 BASELINE RD., SUITE C, RANCHO CUCAMONGA, CA 91701
TEL. (909) 941-3008 FAX (909) 941-8211

Not for permitting or construction

PBK
ARCHITECT PBK Architects, Inc.
PBK.com
SAN LUIS OBISPO
1327 Archer Street, Suite 110
San Luis Obispo, CA 93401
805-329-3076

FIRE STATION #44
COASTSIDE FIRE PROTECTION DISTRICT

501 STETSON STREET
MOSS BEACH, CA 94038

100% CD SET

COASTSIDE FIRE PROTECTION DISTRICT EST 2002

BID SET

KEY PLAN

PLAN NORTH — TRUE NORTH

REGISTERED PROFESSIONAL ENGINEER
ROLAND E. SOFELD
No. 517229
6/30/26
ELECTRICAL
STATE OF CALIFORNIA

CLIENT	COASTSIDE FIRE PROTECTION DISTRICT
PROJECT NUMBER	230137
DATE	2/14/2025
DRAWN BY: LS	CHKED BY: RES

REVISIONS

#	DESCRIPTION	DATE
1	PLAN CHECK #1 RESPONSE	12/05/25
2	PLAN CHECK #2 RESPONSE	03/13/26
3	PLAN CHECK #3 RESPONSE	05/22/26
4	PLAN CHECK #4 RESPONSE	08/25/26

GENERAL NOTES AND SYMBOL LIST

This document is for plan review only

E0.1

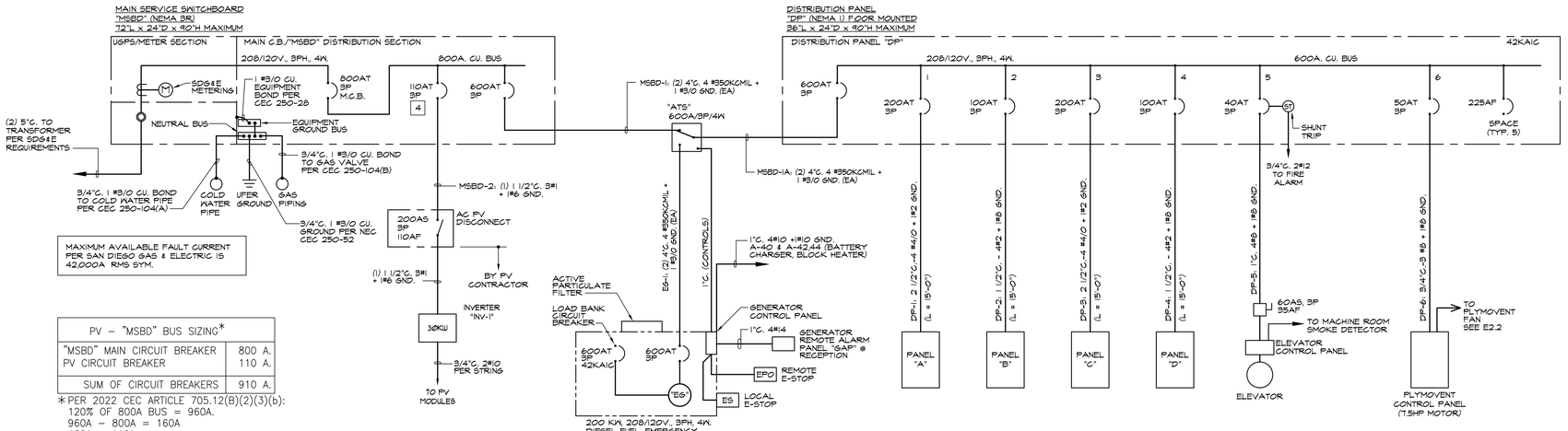

PV – "MSBD" BUS SIZING*	
"MSBD" MAIN CIRCUIT BREAKER	800 A.
PV CIRCUIT BREAKER	110 A.
SUM OF CIRCUIT BREAKERS	910 A.

*PER 2022 CEC ARTICLE 705.12(B)(2)(3)(b):
120% OF 800A BUS = 960A.
960A – 800A = 160A
160A > 110A.

SINGLE LINE DIAGRAM NOTES

1. THE MAIN CIRCUIT BREAKER SHALL BE PERMANENTLY MARKED TO IDENTIFY IT AS THE SERVICE DISCONNECT PER N.E.C. 230.70(B).
2. PER SECTION 250.52(A)(1) METAL UNDERGROUND WATER PIPE - CONNECTION TO THE INTERIOR METAL WATER PIPING SHALL BE MADE WITHIN 5 FEET FROM POINT OF ENTRANCE.
3. PROVIDE AND INSTALL SIGNAGE FOR AVAILABLE FAULT CURRENT PER CEC 110.24. PROVIDE SELF-ADHESIVE VINYL LABEL TO AFFIX TO ELECTRICAL EQUIPMENT TO WARN OF ARC FLASH HAZARDS. THE THE LABEL SHALL BE LOCATED ON THE EQUIPMENT TO BE CLEARLY VISIBLE TO QUALIFIED PERSONS BEFORE EXAMINATION, ADJUSTMENT, SERVICING, OR MAINTENANCE OF THE EQUIPMENT. CONTRACTOR TO PLACE COMPANY NAME AND CONTACT PHONE NUMBER ON SIGN. THIS DETAIL IS FOR REFERENCE ONLY.
4. CONTRACTOR TO ENSURE THAT THE UTILITY (S.C.E.) SERVICE REPORT SHALL BE AVAILABLE ON SITE AT ALL TIMES FOR BUILDING INSPECTION TO VERIFY.

CONSTRUCTION NOTES

1. ALL EQUIPMENT SHALL BE LISTED BY U.L. OR A COUNTY APPROVED THIRD PARTY TESTING FACILITY.
2. RESISTANCE TO GROUND SHALL NOT EXCEED 25 OHMS. PROVIDE ADDITIONAL GROUND RODS, SPACED 6'-0" APART, TO MEET THIS REQUIREMENT. REFER TO SHEET E3.2, DETAIL #4 AND #5 FOR COMPLETE REQUIREMENTS.
3. GROUND FAULT PROTECTION OF EQUIPMENT SHALL BE PROVIDED FOR SOLIDLY GROUNDED WYE ELECTRIC SERVICES OF MORE THAN 150 VOLTS TO GROUND BUT NOT EXCEEDING 1000 VOLTS PHASE-TO-PHASE FOR EACH SERVICE DISCONNECT RATED 1000 AMPERES OR MORE. GFPD IS REQUIRED TO HAVE PERFORMANCE TESTING AS DESCRIBED IN 230.95(C), 2019 CEC.
4. PV CIRCUIT BREAKER TO BE LOCATED AT THE OPPOSITE END OF THE BUS FROM THE MAIN CIRCUIT BREAKER.

3 → WARNING
MAXIMUM AVAILABLE FAULT CURRENT:
42,000 SYMMETRICAL RMS AMPERES
DATE: MM/DD/YYYY
XYZ ELECTRIC 1-800-123-4567

APPLICIABLE CODES
ALL WORK SHALL BE PERFORMED IN ACCORDANCE WITH ALL APPLICABLE LAWS AND REGULATIONS, AND THE REQUIREMENTS OF THE CALIFORNIA CODE OF REGULATIONS (CCR), TITLE 24, INCLUSIVE OF:
2022 CALIFORNIA ADMINISTRATIVE CODE (CAC), PART 1, TITLE 24 C.C.R.
2022 CALIFORNIA BUILDING CODE (CBC), PART 2, TITLE 24 C.C.R.
2022 CALIFORNIA ELECTRICAL CODE (CEC), PART 3, TITLE 24 C.C.R.
2022 CALIFORNIA MECHANICAL CODE (CMC), PART 4, TITLE 24, C.C.R.
2022 CALIFORNIA PLUMBING CODE (CPC), PART 5, TITLE 24 C.C.R.
2022 CALIFORNIA ENERGY CODE, PART 6, TITLE 24 C.C.R.
2022 CALIFORNIA FIRE CODE (CFC), PART 9, TITLE 24 C.C.R.
2022 CALIFORNIA REFERENCED STANDARDS CODE, PART 12, TITLE 24 C.C.R.

PANEL "A" — VOLTAGE: 208/120V-4-WIRE; LOCATION: ELEC. ROOM; MAIN BREAKER: M.L.O.; BUS SIZE COPPER: 200A.; SCA: SERIES; MOUNT: SURFACE; ENTRY: BOTTOM

DESCRIPTION	CKT	BKR	P	LTS	REC	MSC	MTR	A-VA	B-VA	C-VA	AMPS
RMS 104, 103 RECEPTACLES	1	20	1		3			540			
RMS 104, 103 RECEPTACLES	3	20	1		3				540		
LOBBY 101 & RR 102 REC.	5	20	1		5					900	
RMS 104, 103 PLUG LOAD	7	20	1		3			540			
HALLWAY 110 RECEPTACLES	9	20	1		3				540		
HALLWAY 110 RECEPTACLES	11	20	1		3					540	
FITNESS 106 TREADMILL	13	20	1		1			500			
FITNESS 106 BIKE	15	20	1		1				500		
RMS 117, 115 RECEPTACLES	17	20	1		4					720	
RMS 117, 113 RECEPTACLES	19	20	1		3			540			
RMS 117 RECEPTACLES	21	20	1		4				720		
TELECOM BACKBOARD REC.	23	20	1		4					720	
APP. BAY RECEPTACLES	25	20	1		3			540			
APP. BAY RECEPTACLES	27	20	1		3				540		
WH-1	29	20	1		1					180	
FITNESS 106 RECEPTACLES	31	20	1		2			360			
LOW LEVEL NIGHT LIGHTS	33	20	1	9					27		
ELEVATOR LTS & RECEPT.	35	20	1	2	2					420	
FITNESS 106 SUANA	37	20	1		1			1200			
EM POLE LIGHTS	39	20	1	3					1227		
EM POLE LIGHTS	41	20	1	3						1227	
SPARE	43	20	1								
SPARE	45	20	1								
SPARE	47	20	1								
SPARE	49	20	1								
SPARE	51	20	1								
SPARE	53	20	1								
SUB TOTAL VOLTA/AMPS:								4220	4094	4707	
APP. BAY CORD REEL	2	20	1		1			750			
APP. BAY CORD REEL	4	20	1		1				750		
APP. BAY CORD REEL	6	20	1		1					750	
ROOF RECEPTACLE	8	20	1		1			180			
RM 122 GARBAGE DISPOSAL	10	30	1			1			1920		
BLOCKER HEATER	12	20	2			1				1500	
W/CKT. 42	14	—	—					1500			
TC/AQUA STAT/CP-1	16	20	1			3			150		
GEN. BATTERY CHARGER	18	20	1			1				1200	
RMs 101 - 117 LIGHTS	20	20	1	34				981			
RM 115 GARBAGE DISPOSAL	22	30	1			1			1920		
SPARE	24	20	1								
RM 115 COFFEE MAKER	26	20	1		1			1200			
LIGHTING CONTROL PANEL	28	20	1			1			500		
GATE OPERATOR	30	20	1			1				500	
FUEL DISPENSING SYSTEM	32	20	1			1		360			
SHUNT TRIP	34										
DRINKING FOUNTAIN	36	20	1			1				180	
SPARE	38	20	1								
SPARE	40	20	1								
SPARE	42	20	1								
SPARE	44	20	1								
SPARE	46	20	1								
SPARE	48	20	1								
SPARE	50	20	1								
SPARE	52	20	1								
SPARE	54	20	1								
SUB TOTAL VOLTA/AMPS:								4971	5240	4130	
PANEL SUB TOTAL VOLTA/AMPS:								9191	9334	8837	
TOTAL LCL/PHASE:								245	314	412	
TOTAL VOLTA/AMPS:								9436	9648	9249	
TOTAL AMPS/PHASE:								79	80	77	

CONNECTED: 27362 VA
25% OF MTR: VA
25% OF LCL: 970.5 VA
CALCULATED: 28333 VA = 78.64 AVERAGE AMPS

PANEL "B" — VOLTAGE: 208/120V-4-WIRE; LOCATION: ELEC. ROOM; MAIN BREAKER: M.L.O.; BUS SIZE COPPER: 100A.; SCA: SERIES; MOUNT: RECESSED; ENTRY: BOTTOM

DESCRIPTION	CKT	BKR	P	LTS	REC	MSC	MTR	A-VA	B-VA	C-VA	AMPS
* RMs 212,206-208,210,211 REC.	1	20	1		4			720			
RMs 212,206-208,210,211 REC.	3	20	1		4				720		
RMs 212,206-208,210,211 REC.	5	20	1		4					720	
WASHER	7	20	1		1			500			
DRYER	9	30	2		1				750		
W/CKT. 9	11	—	—							750	
* RMs 201, 203-205 RECEPT.	13	20	1		4			720			
RMs 201, 203-205 RECEPT.	15	20	1		3				540		
RMs 201, 203-205 RECEPT.	17	20	1		3					540	
RMs 212 & 213 RECEPT.	19	20	1		4			720			
* DAY ROOM WALL RECEPT.	21	20	1		2				360		
DAY ROOM WALL RECEPT.	23	20	1		3					540	
DAY ROOM FLOOR RECEPT.	25	20	1		2			360			
DAY ROOM FLOOR RECEPT.	27	20	1		3				540		
KITCHEN CONV. RECEPT.	29	20	1		4					720	
HOOD	31	20	1		1			180			
RANGE IGNITER	33	20	1		1				180		
FC2-1 - FC2-7, FC3-2	35	20	2			8				942	
W/CKT. 35	37	—	—					942			
RM 218 GARBAGE DISPOSAL	39	30	1			1			1920		
LOW LEVEL NIGHT LIGHTS	41	20	1	15						45	
SUB TOTAL VOLTA/AMPS:								4142	5010	4257	
RM 218 COFFEE MAKER	2	20	1		1			1200			
RM 218 DISH WASHER	4	20	1		1				1000		
RM 218 REFRIGERATOR	6	20	1		1					1000	
RM 218 FREEZER	8	20	1		1			1000			
SPARE	10	20	1								
SPARE	12	20	1								
SPARE	14	20	1								
SPARE	16	20	1								
SPARE	18	20	1								
SPARE	20	20	1								
SPARE	22	20	1								
SPARE	24	20	1								
KITCHEN & STORAGE LTS	26	20	1	20				513			
APP BAY LIGHTS	28	20	1	22					836		
HALLWAY & DORM LIGHTS	30	20	1	36						638	
SPACE	32	—	—								
SPACE	34	—	—								
SPACE	36	—	—								
SPACE	38	—	—								
PERIMETER WALL LIGHTS	40	20	1	10					240		
BUILDING LTS & BOLLARDS	42	20	1	18						442	
SUB TOTAL VOLTA/AMPS:								2713	2076	2080	
PANEL SUB TOTAL VOLTA/AMPS:								6855	7086	6337	
TOTAL LCL/PHASE:								128	269	281	
TOTAL VOLTA/AMPS:								6983	7355	6618	
TOTAL AMPS/PHASE:								58	61	55	

CONNECTED: 20278 VA
25% OF MTR: VA
25% OF LCL: 678.5 VA
CALCULATED: 20957 VA = 58.17 AVERAGE AMPS

* = INDICATES ARC-FAULT CIRCUIT INTERRUPTER TYPE CIRCUIT BREAKER.

PANEL "C" — VOLTAGE: 208/120V-4-WIRE; LOCATION: ELEC. ROOM; MAIN BREAKER: M.L.O.; BUS SIZE COPPER: 200A.; SCA: SERIES; MOUNT: RECESSED; ENTRY: BOTTOM

DESCRIPTION	CKT	BKR	P	LTS	REC	MSC	MTR	A-VA	B-VA	C-VA	AMPS
FC1-1 - FC1-7, FCS-1	1	20	2			8		1473			
W/CKT. 33	3	—	—						1473		
UH-1 & UH-2	5	20	1		2					1512	
EF-1, EF-2, EF-3	7	20	1		3			1404			
HRU-1	9	80	3						7236		
W/CKT. 9	11	—	—							7236	
W/CKT. 9	13	—	—					7236			
HRU-2	15	40	3						3420		
W/CKT. 15	17	—	—							3420	
W/CKT. 15	19	—	—					3420			
SPARE	21	20	1								
SPARE	23	20	1								
SPARE	25	20	1								
SPARE	27	20	1								
SPARE	29	20	1								
SPARE	31	20	1								
SPARE	33	20	1								
FC2-1 - FC2-7, FCS-2	35	20	2			8				942	
W/CKT. 35	37	—	—					942			
SPARE	39	20	1			1					
SPARE	41	20	1								
SUB TOTAL VOLTA/AMPS:								14475	12129	13110	
SCU-1/SFC-1	2	20	2			1		1560			
W/CKT. 2	4	—	—						1560		
SCU-2/SFC-2	6	20	2			1				1560	
W/CKT. 6	8	—	—					1560			
EF-11	10	15	3			1			936		
W/CKT. 10	12	—	—							936	
W/CKT. 10	14	—	—					936			
EF-4, EF-5, EF-6, BF-1	16	20	1			4			216		
EF-7, EF-8, EF-9, EF-10	18	20	1			4				48	
SPARE	20	20	1								
SPARE	22	20	1								
SPARE	24	20	1								
SPARE	26	20	1								
SPARE	28	20	1								
SPARE	30	20	1								
SPACE	32	—	—								
SPACE	34	—	—								
SPACE	36	—	—								
SPACE	38	—	—								
SPACE	40	—	—								
SPACE	42	—	—								
SUB TOTAL VOLTA/AMPS:								4056	2712	2544	
PANEL SUB TOTAL VOLTA/AMPS:								18531	14841	15654	
TOTAL LCL/PHASE:								0	0	0	
TOTAL VOLTA/AMPS:								18531	14841	15654	
TOTAL AMPS/PHASE:								154	124	130	

CONNECTED: 49026 VA
25% OF MTR: VA
25% OF LCL: 0 VA
CALCULATED: 49026 VA = 136.08 AVERAGE AMPS

PANEL "D" — VOLTAGE: 208/120V-4-WIRE; LOCATION: ELEC. ROOM; MAIN BREAKER: M.L.O.; BUS SIZE COPPER: 100A.; SCA: SERIES; MOUNT: RECESSED; ENTRY: BOTTOM

DESCRIPTION	CKT	BKR	P	LTS	REC	MSC	MTR	A-VA	B-VA	C-VA	AMPS
SPARE	1	20	1								
SPARE	3	20	1								
SPARE	5	20	1								
SPARE	7	20	1								
SPARE	9	20	1								
SPARE	11	20	1								
SPARE	13	20	1								
SPARE	15	20	1								
SPARE	17	20	1								
SPARE	19	20	1								
SPARE	21	20	1								
SPARE	23	20	1								
SPARE	25	20	1								
SPARE	27	20	1								
SPARE	29	20	1								
SPARE	31	20	1								
SPARE	33	20	1								
SPARE	35	20	1								
SPARE	37	20	1								
SPARE	39	20	1								
SPARE	41	20	1								
SUB TOTAL VOLTA/AMPS:								0	0	0	
AIR COMPRESSOR	2	30	3		1			2100			
W/CKT. 18	4	—	—						2100		
W/CKT. 18	6	—	—							2100	
RM 119 - 122 RECEPTACLES	8	20	1		3			540			
RM 119 - 122 RECEPTACLES	10	20	1		3				540		
DRYER	12	30	2		1					750	
W/CKT. 12	14	—	—					750			
RMs 119 - 125 LIGHTS	16	20	1	16					403		
○ SHOP 124 PLUGMOLD	18	20	1			1				1920	
SPARE	20	20	1								
SPARE	22	20	1								
SPARE	24	20	1								
SPARE	26	20	1								
SPARE	28	20	1								
SPARE	30	20	1								
SPARE	32	20	1								
SPARE	34	20	1								
SPARE	36	20	1								
SPARE	38	20	1								
SPARE	40	20	1								
SPARE	42	20	1								
SUB TOTAL VOLTA/AMPS:								3390	3043	4770	
PANEL SUB TOTAL VOLTA/AMPS:								3390	3043	4770	
TOTAL LCL/PHASE:								0	101	0	
TOTAL VOLTA/AMPS:								3390	3144	4770	
TOTAL AMPS/PHASE:								28	26	40	

CONNECTED: 11203 VA
25% OF MTR: VA
25% OF LCL: 100.75 VA
CALCULATED: 11304 VA = 31.38 AVERAGE AMPS

○ = INDICATES GROUND FAULT TYPE CIRCUIT BREAKER

MAIN SWITCHBRD "MSBD" — VOLTAGE: 208/120V-4-WIRE; LOCATION: ELEC. ROOM; MAIN BREAKER: 800A.; BUS SIZE COPPER: 800A.; SCA: 42 KAIC; MOUNT: FLOOR; ENTRY: TOP

DESCRIPTION	CKT	CB	P	LTS	REC	MSC	MTR	A-VA	B-VA	C-VA	AMPS
DISTRIBUTION PANEL "DP"	1	600	3			1		44594	41014	42615	
SOLAR	2	150	3			1		10608	10608	10608	
SUB TOTAL VOLTA/AMPS:								55202	51622	53223	
TOTAL AMPS/PHASE:								460	430	444	

CONNECTED: 160047 VA
25% OF MTR: 0 VA
25% OF LCL: 0 VA
CALCULATED: 160047 VA = 444.24 AMPS 444.24 ACTUAL AMPS

SWITCHBOARD "DP" — VOLTAGE: 208/120V-4-WIRE; LOCATION: ELEC. ROOM; MAIN BREAKER: 600A.; BUS SIZE COPPER: 600A.; SCA: 42 KAIC; MOUNT: FLOOR; ENTRY: TOP

DESCRIPTION	CKT	CB	P	LTS	REC	MSC	MTR	A-VA	B-VA	C-VA	AMPS
PANEL "A"	1	200	3			1		9134	9114	9069	
PANEL "B"	2	100	3			1		6980	7355	6562	
PANEL "C"	3	200	3			1		18531	14841	15654	
PANEL "D"	4	100	3			1		3390	3144	4770	
ELEVATOR	5	40	3			1		3140	3140	3140	
PLYMOVENT	6	50	3			1		3420	3420	3420	
SUB TOTAL VOLTA/AMPS:								44594	41014	42615	
TOTAL AMPS/PHASE:								372	342	355	

CONNECTED: 128223 VA
25% OF MTR: 0 VA
25% OF LCL: 0 VA
CALCULATED: 128223 VA = 355.91 AMPS 355.91 ACTUAL AMPS

PV POWER SUMMARY

INVERTER	ARRAY #	BUILDING	NUMBER OF MODULES	STC Kw	PTC Kw	AC Kw	
INV-1	1	ROOF	16	8.8	6.6	6.39	
			16	8.8	6.6	6.39	17.8
			TOTAL MODULES	TOTAL STC Kw	TOTAL PTC Kw	TOTAL AC Kw	AC AMPS @ 208V

INVERTER

INVERTER	CONTINUOUS POWER OUTPUT (Kw)	CEC WEIGHTED EFFICIENCY(%)	AC MAXIMUM CONTINUOUS CURRENT (AMPS) AT 208V	MIN. OVERCURRENT PROTECTION PER CEC 690.10(B)	MAXIMUM DC INPUT VOLTAGE	AC INPUT VOLTAGE	MODULES PER STRING	MODULE Vmp	OPERATING VOLTAGE	MODULE Voc	MODULE TEMP. COEFFICIENT	MAXIMUM SYSTEM VOLTAGE
INV-1	30	96.5	83.4	104.3	550	208	8	41.55	332.4	49.59	0.26%	428.2

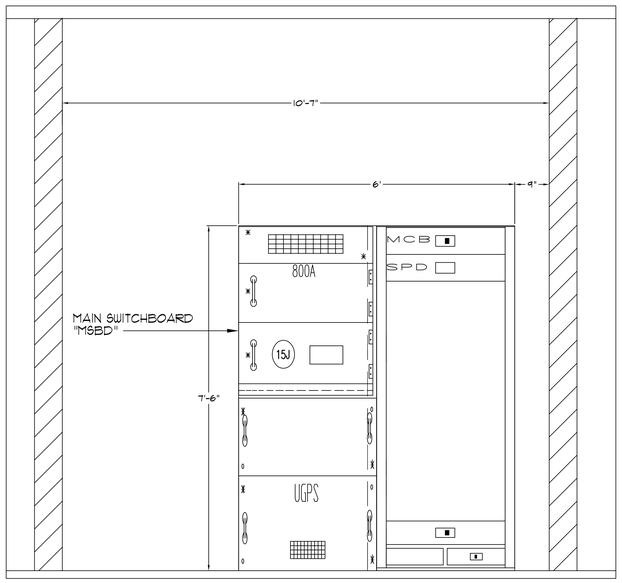

MAIN SWITCHBOARD ELEVATION
SCALE: 3/4" = 1'-0"

A&F ENGINEERING GROUP, INC.
9320 BASELINE RD., SUITE C, RANCHO CUCAMONGA, CA 91701
TEL: (909) 941-3008 FAX: (909) 941-8211

Not for permitting or construction

PBK
ARCHITECT PBK Architects, Inc.
PBK.com
SAN LUIS OBISPO
1327 Archer Street, Suite 110
San Luis Obispo, CA 93401
805-329-3076

FIRE STATION #44
COASTSIDE FIRE PROTECTION DISTRICT
501 STETSON STREET
MOSS BEACH, CA 94038
100% CD SET

BID SET

KEY PLAN
PLAN NORTH
TRUE NORTH

REGISTERED PROFESSIONAL ENGINEER
RICHARD L. STITZ
No. 017229
6/30/26
STATE OF CALIFORNIA

CLIENT
COASTSIDE FIRE PROTECTION DISTRICT
PROJECT NUMBER
230137
DATE 2/14/2025
DRAWN BY: LS CHKED BY: RES

REVISIONS

#	DESCRIPTION	DATE
1	PLAN CHECK #1 RESPONSE	12/05/25
2	PLAN CHECK #2 RESPONSE	03/13/26
3	PLAN CHECK #3 RESPONSE	05/22/26
4	PLAN CHECK #4 RESPONSE	08/25/26

This document is for plan review only

SINGLE LINE DIAGRAM AND PANEL SCHEDULES

E0.2

LIGHTING FIXTURE SCHEDULE

TYPE	MANUFACTURER CATALOG#	LAMP QTY. & TYPE	FIXTURE WATTAGE	VOLTS	REMARKS
A	JLC-TECH #TBLX-MI-MO-4-24-D-U-X-UNV #TBEM-XS-12-4-UNV OR APPROVED EQUAL	2380 LUMEN 114 LM/W 4000K	21	UNV	4' LED T-BAR LIGHT FIXTURE. FIXTURE SHALL BE PROVIDED WITH MEDIUM OUTPUT, INTEGRAL 0-10V, LED DIMMING DRIVER, 4000K COLOR TEMPERATURE AND N-LIGHT LUMEN MANAGEMENT, WHERE SHADED INDICATES ON PLAN PROVIDE INTEGRAL 90 MINUTE 12 WATT EM. BATTERY PACK. PROVIDE ALL REQUIRED MOUNTING ACCESSORIES FOR CEILING / WALL TYPE THE FIXTURE IS TO BE INSTALLED IN.
B	JLC-TECH #TBLX-MI-MO-4-24-B-U-X-UNV #TBEM-XS-12-4-UNV OR APPROVED EQUAL	2256 LUMEN 114 LM/W 4000K	21	MVOLT	4' LED T-BAR LIGHT FIXTURE. FIXTURE SHALL BE PROVIDED WITH MEDIUM OUTPUT, INTEGRAL 0-10V, LED DIMMING DRIVER, 4000K COLOR TEMPERATURE AND N-LIGHT LUMEN MANAGEMENT, WHERE SHADED ON PLAN INDICATES PROVIDE INTEGRAL 90 MINUTE 12 WATT EM. BATTERY PACK. PROVIDE ALL REQUIRED MOUNTING ACCESSORIES FOR CEILING / WALL TYPE THE FIXTURE IS TO BE INSTALLED IN.
C	AXIS LIGHTING #SL3-450-80-40-SO-L(5'-4')- *-UNV-DR-1-B-UNB OR APPROVED EQUAL	2250 LUMEN 128 LM/W 4000K	18	UNV	5' RECESSED ARMSTRONG CEILING LED FIXTURE. FIXTURE SHALL BE PROVIDED WITH INTEGRAL 0-10V, LED DIMMING DRIVER, AND 4000K COLOR TEMPERATURE. WHERE SHADED ON PLAN INDICATES PROVIDE INTEGRAL 90 MINUTE EM. BATTERY PACK. PROVIDE ALL REQUIRED MOUNTING ACCESSORIES FOR CEILING / WALL TYPE THE FIXTURE IS TO BE INSTALLED IN. * = FINISH AS SELECTED BY ARCHITECT.
D	KUZCO #LP49354 OR APPROVED EQUAL	2625 LUMEN 97 LM/W 4000K	27	UNV	5' PENDANT MOUNTED LED FIXTURE. FIXTURE SHALL BE PROVIDED WITH INTEGRAL 0-10V, LED DIMMING DRIVER, GENERATOR TRANSFER DEVICE, AND 4000K COLOR TEMPERATURE. PROVIDE ALL REQUIRED MOUNTING ACCESSORIES FOR CEILING / WALL TYPE THE FIXTURE IS TO BE INSTALLED IN.
E	LUMENWERX #ELOP-2FT-X-12FT-ILO-SW-80CRI- 12600LM-40K-UNV-D1-IC-RCD-B- FOC-MC-36IN-* OR APPROVED EQUAL	12600 LUMEN 87 LM/W 4000K	145	UNV	2' X 12' PENDANT MOUNTED LED FIXTURE. FIXTURE SHALL BE PROVIDED WITH 12600 LUMEN PACKAGE, MVOLT VOLTAGE INTEGRAL 0-10V, LED DIMMING DRIVER, 4000K COLOR TEMPERATURE. PROVIDE ALL REQUIRED MOUNTING ACCESSORIES FOR CEILING / WALL TYPE THE FIXTURE IS TO BE INSTALLED IN. * = FINISH AS SELECTED BY ARCHITECT.
F	GOTHAM #EVO65G-40/20-AR-L55-120- EZ1-NLTER-B7TD OR APPROVED EQUAL	2153 LUMEN 110 LM/W 4000K	20	120	6" LED SQUARE DOWNLIGHT FIXTURE. FIXTURE SHALL BE PROVIDED WITH INTEGRAL 0-10V, LED DIMMING DRIVER, NLIGHT POWER PACK, AND 4000K COLOR TEMPERATURE. PROVIDE ALL REQUIRED ACCESSORIES FOR CEILING TYPE LIGHT FIXTURE TO BE INSTALLED IN.
G	GOTHAM #EVO65G5H-40/15-DFF-SMO- MVOLT-EZ1-NLTER OR APPROVED EQUAL	1292 LUMEN 88 LM/W 4000K	15	MVOLT	6" LED SQUARE SHOWER DOWNLIGHT FIXTURE. FIXTURE SHALL BE PROVIDED WITH INTEGRAL 0-10V, LED DIMMING DRIVER, NLIGHT POWER PACK, AND 4000K COLOR TEMPERATURE. PROVIDE ALL REQUIRED ACCESSORIES FOR CEILING TYPE LIGHT FIXTURE TO BE INSTALLED IN.
H	WAC LIGHTING #BL-1630-WT OR APPROVED EQUAL	484 LUMEN 66 LM/W 4000K	8	120	WALL MOUNTED DORM BED READING LIGHT.
I	PINNACLE ARCHITECTURAL LIGHTING #LF44D-AR-840MO-SF-U-ES1-1- GB-IP-W-AM OR APPROVED EQUAL	4068 LUMEN 121 LM/W 4000K	33	MVOLT	4'X4' RECESSED LED LIGHT FIXTURE. FIXTURE SHALL BE PROVIDED WITH MIDDLE OUTPUT, INTEGRAL 0-10V, LED DIMMING DRIVER, AND 4000K COLOR TEMPERATURE. PROVIDE ALL REQUIRED MOUNTING ACCESSORIES FOR CEILING / WALL TYPE THE FIXTURE IS TO BE INSTALLED IN.
J	PINNACLE ARCHITECTURAL LIGHTING #LF1-4D-AR-840MO-SF-U-ES1-1- GB-IP-W-AM OR APPROVED EQUAL	4144 LUMEN 134 LM/W 4000K	31	MVOLT	1'X4' RECESSED LED LIGHT FIXTURE. FIXTURE SHALL BE PROVIDED WITH MIDDLE OUTPUT, INTEGRAL 0-10V, LED DIMMING DRIVER, AND 4000K COLOR TEMPERATURE. WHERE SHADED INDICATES ON PLAN PROVIDE INTEGRAL 90 MINUTE 10 WATT EM. BATTERY PACK. PROVIDE ALL REQUIRED MOUNTING ACCESSORIES FOR CEILING / WALL TYPE THE FIXTURE IS TO BE INSTALLED IN.
K	FINELITE #HF-6-R-D-4'-V-840-F-96LG-120V- SC-ELD-10V-0%-SF-FE-*-STD- BSL3IOLP OR APPROVED EQUAL	3840 LUMEN 109 LM/W 4000K	38	MVOLT	4 FOOT RECESSED LED FIXTURE. FIXTURE SHALL BE HIGH OUTPUT, SINGLE CIRCUIT 0-10V, LED DIMMING DRIVERS, 4000K COLOR TEMPERATURE, AND FLUSH LEN. WHERE SHADED ON PLAN INDICATES PROVIDE INTEGRAL 90 MINUTE EM. BATTERY PACK.PROVIDE ALL REQUIRED ACCESSORIES FOR CEILING TYPE LIGHT FIXTURE TO BE INSTALLED IN. * = FINISH AS SELECTED BY ARCHITECT.
L	LITHONIA LIGHTING #OTL-4-35L-A14-EZ1-LP840- N100-B6TD #2GA14 OR APPROVED EQUAL	3466 LUMEN 122 LM/W 4000K	29	MVOLT	RECESSED MOUNTED 1'X4' LED FIXTURE. FIXTURE SHALL BE PROVIDED WITH 3500 LUMEN PACKAGE 0-10V, LED DIMMING DRIVER, 4000 KELVIN COLOR TEMPERATURE, AND INTEGRAL NLIGHT ENABLED MODULE. PROVIDE ALL REQUIRED MOUNTING HARDWARE FOR TYPE OF CEILING FIXTURE IS TO BE INSTALLED IN.

LIGHTING FIXTURE SCHEDULE

TYPE	MANUFACTURER CATALOG#	LAMP QTY. & TYPE	FIXTURE WATTAGE	VOLTS	REMARKS
M	LITHONIA LIGHTING #STL4-30L-EZ1-LP840- N00-EGWLCP OR APPROVED EQUAL	3,195 LUMEN 120 LM/W 4000K	27	MVOLT	1'X4' SURFACE MOUNTED LED FIXTURE. FIXTURE SHALL BE PROVIDED WITH 4,000 LUMEN PACKAGE, MVOLT VOLTAGE INTEGRAL 0-10V, LED DIMMING DRIVER, 4000K COLOR TEMPERATURE, AND N-LIGHT LUMEN MANAGEMENT. PROVIDE ALL REQUIRED MOUNTING ACCESSORIES FOR CEILING / WALL TYPE THE FIXTURE IS TO BE INSTALLED IN.
N	LITHONIA LIGHTING #VRTL-F-L48-3000LM-IGW- AP250FL-120-EZ1-40K-80CRI- BGTD-NPB8GEZ-WH OR APPROVED EQUAL	2451 LUMEN 111 LM/W 4000K	27	120	1'X4' RECESSED LED LIGHT FIXTURE. FIXTURE SHALL BE PROVIDED WITH 3,000 LUMEN OUTPUT, INTEGRAL 0-10V, LED DIMMING DRIVER, 4000K COLOR TEMPERATURE, N-LIGHT LUMEN MANAGEMENT AND DRYWALL KIT (DGA24). WHERE SHADED ON PLAN INDICATES PROVIDE INTEGRAL 90 MINUTE EM. BATTERY PACK. PROVIDE ALL REQUIRED MOUNTING ACCESSORIES FOR CEILING / WALL TYPE THE FIXTURE IS TO BE INSTALLED IN.
O	COOPER LIGHTING SOLUTIONS #HLI-48-D4-S-P OR APPROVED EQUAL	1540 LUMEN 74 LM/W 4000K	21	120	4' UNDERCABINET LED FIXTURE. FIXTURE SHALL BE PROVIDED WITH 4000K COLOR TEMPERATURE, INTEGRAL 0-10V, LED DIMMING, AND 90 COLOR RENDERING INDEX.
P	COOPER LIGHTING SOLUTIONS #HLI-24-D4-S-P OR APPROVED EQUAL	785 LUMEN 72 LM/W 4000K	11	120	2' UNDERCABINET LED FIXTURE. FIXTURE SHALL BE PROVIDED WITH 4000K COLOR TEMPERATURE, INTEGRAL 0-10V, LED DIMMING, AND 90 COLOR RENDERING INDEX.
Q	LISMAN LIGHTING #LEE-30041-2X14-M-T3-W40-*- 120/277LV-P OR APPROVED EQUAL	3,840 LUMEN 109 LM/W 4000K	38	MVOLT	WALL MOUNTED LED FIXTURE. FIXTURE TO BE PROVIDED WITH 1,660 LUMEN PACKAGE, INTEGRAL 0-10V, LED DIMMING DRIVER, AND 4000K COLOR TEMPERATURE. PROVIDE ALL REQUIRED REQUIRED MOUNTING ACCESSORIES FOR CEILING / WALL TYPE THE FIXTURE IS TO BE INSTALLED IN. * = FINISH AS SELECTED BY ARCHITECT.
R	LITHONIA LIGHTING #ZLID-L48-SWR-3000LM-F5T- MVOL-40K-80CRI-VW-NPF18D OR APPROVED EQUAL	4176 LUMEN 134 LM/W 4000K	30	MVOLT	4'-0" LED STRIP LIGHT FIXTURE. FIXTURE SHALL BE PROVIDED WITH 3,000 LUMEN PACKAGE, 4000K COLOR TEMPERATURE, INTEGRAL DIMMING DRIVER, AND FROSTED DIFFUSER. PROVIDE ALL REQUIRED REQUIRED MOUNTING ACCESSORIES FOR CEILING / WALL TYPE THE FIXTURE IS TO BE INSTALLED IN.
S	BEGA #33055-K4 OR APPROVED EQUAL	480 LUMEN 44 LM/W 4000K	11	UNV	LED STEPLIGHT FIXTURE. FIXTURE SHALL BE PROVIDED WITH 4000K COLOR TEMPERATURE AND INSTALLATION HOUSING (#BB24064).
T	FINELITE #HF-4-XM-D-8'-5-8-40-F-120V- SC-MB OR APPROVED EQUAL	3,032 LUMEN 105 LM/W 4000K	29	120	WALL MOUNTED 4' WIDE LED LIGHT FIXTURE. FIXTURE SHALL BE PROVIDED WITH STANDARDS OUTPUT, INTEGRAL 0-10V, LED DIMMING DRIVER, AND 4000K COLOR TEMPERATURE. PROVIDE ALL REQUIRED MOUNTING ACCESSORIES FOR CEILING / WALL TYPE THE FIXTURE IS TO BE INSTALLED IN.
U	DUAL-LITE #LE-*-**-R-***-N-E-1 OR APPROVED EQUAL	LED	3	120	ARCHITECTURAL LED EDGE-LIT EXIT SIGN WITH RED LETTER, SATIN ALUMINUM FINISH, INTEGRAL 90 MINUTE BATTERY BACK-UP. * = MOUNTING PER PLAN. ** = FACES PER PLAN. *** = DIRECTIONAL ARROWS PER PLAN.
V	LUMENWERX #SHERP-12IN-HLO-SW-80-1200LM- UNV-D1-IC-RCD-B-RPE36-B OR APPROVED EQUAL	800 LUMEN 63 LM/W 4000K	14	MVOLT	12' LED ROUND PENDENT FIXTURE. FIXTURE SHALL BE PROVIDED WITH INTEGRAL 0-10V, LED DIMMING DRIVER, AND 4000K COLOR TEMPERATURE. PROVIDE ALL REQUIRED ACCESSORIES FOR CEILING TYPE LIGHT FIXTURE TO BE INSTALLED IN.
X	RAB LIGHTING #FSLEDHSNN/120 OR APPROVED EQUAL	44 LUMEN 31 LM/W 4000K	3	120	LOW LEVEL LED STEP LIGHT FIXTURE WITH LOUVER. MOUNT AT +18" ABOVE FINISHED FLOOR (A.F.F.).
Y	FINELITE #HF-6-XD-D-4'-V-840-F-96LG- 120V-SC-ELD-10V-0%-MB-FE-*- STD-BSL3IOLP OR APPROVED EQUAL	3,769 LUMEN 100 LM/W 4000K	38	MVOLT	4 FOOT WALL-MOUNTED LED FIXTURE. FIXTURE SHALL BE HIGH OUTPUT, SINGLE CIRCUIT, 0-10V, LED DIMMING DRIVERS, 4000K COLOR TEMPERATURE, AND FLUSH LEN. WHERE SHADED ON PLAN INDICATES PROVIDE INTEGRAL 90 MINUTE EM. BATTERY PACK. PROVIDE ALL REQUIRED ACCESSORIES FOR CEILING TYPE LIGHT FIXTURE TO BE INSTALLED IN. ** FINISH AS SELECTED BY ARCHITECT.
Z	J.L.G-TECH #SQR-M4-4-24-B-W #SQRH-4-24-MF-W OR APPROVED EQUAL	2,256 LUMEN 72 LM/W 4000K	32	MVOLT	4' RECESSED LED LIGHT FIXTURE. FIXTURE SHALL BE PROVIDED WITH MEDIUM OUTPUT, INTEGRAL 0-10V, LED DIMMING DRIVER, 4000K COLOR TEMPERATURE AND N-LIGHT LUMEN MANAGEMENT. PROVIDE ALL REQUIRED MOUNTING ACCESSORIES FOR CEILING / WALL TYPE THE FIXTURE IS TO BE INSTALLED IN.

EXTERIOR LIGHTING FIXTURE SCHEDULE

TYPE	MANUFACTURER CATALOG#	LAMP QTY. & TYPE	FIXTURE WATTAGE	VOLTS	BUG RATING	REMARKS
SA	LITHONIA LIGHTING #WPX1-LED-P2-30K-MVOLT-DBLXD OR APPROVED EQUAL	2,748 LUMEN 115 LM/W 3000K	24	MVOLT	B1-U0-G1	EXTERIOR SURFACE MOUNTED LED FIXTURE. FIXTURE SHALL BE PROVIDED WITH P2 POWER PACKAGE, 3000 KELVIN COLOR TEMPERATURE, AND 120-277 VOLTAGE. PROVIDE ALL REQUIRED ACCESSORIES FOR A COMPLETE INSTALLATION.
SB	BEACON LIGHTING #TRP2-16OL-35-3K8-4F-UNV-*- NWG OR APPROVED EQUAL	5316 LUMEN 151 LM/W 3000K	38	MVOLT	B1-U0-G2	WALL-MOUNTED LED FIXTURE. FIXTURE SHALL BE PROVIDED WITH TYPE IV FORWARD THROW OPTICS, 4000K COLOR TEMPERATURE, UNIVERSAL VOLTAGE, MOTION SENSOR AND PHOTOCELL. PROVIDE ALL REQUIRED ACCESSORIES FOR A COMPLETE INSTALLATION. * = FINISH AS SELECTED BY ARCHITECT.
SC	GOTHAM LIGHTING #EVO65G5H-30/10-DFF-SOL-120- EZ1-NLTER-B6TD OR APPROVED EQUAL	1292 LUMEN 88 LM/W 3000K	10	MVOLT	N/A	6 INCH SQUARE LENSED RECESSED DOWNLIGHT. FIXTURE SHALL BE PROVIDED WITH 3000K COLOR TEMPERATURE, 1500 LUMEN PACKAGE, INTEGRAL 0-10V, LED DIMMING DRIVER, MVOLT VOLTAGE, AND NLIGHT ENABLED MODULE. PROVIDE ALL REQUIRED ACCESSORIES FOR CEILING TYPE LIGHT FIXTURE TO BE INSTALLED IN.
SD	U.S. ARCHITECTURAL LIGHTING #TNA-LED-ASY-24LED-WW-120- *-D1M OR APPROVED EQUAL	2,018 LUMEN 73 LM/W 3000K	28	MVOLT	B0-U2-G1	LED ARCHITECTURAL BOLLARD. FIXTURE SHALL BE PROVIDED WITH 180° LIGHT DISTRIBUTION, 24 LED BOARD, 3000 KELVIN COLOR TEMPERATURE AND 120 VOLTAGE DRIVER. PROVIDE ALL REQUIRED ACCESSORIES FOR A COMPLETE INSTALLATION. * = FINISH AS SELECTED BY ARCHITECT.
SE	LUMINAIRE LIGHTING #AEL36-MINI0-15W-30K-MVOLT- DP-* OR APPROVED EQUAL	1,248 LUMEN 87 LM/W 3000K	15	MVOLT	B1-U0-G0	SURFACE MOUNTED LED WALL LIGHT FIXTURE. FIXTURE SHALL BE PROVIDED WITH 1310 LUMENS, 2700K KELVIN COLOR TEMPERATURE, AND 0-10V, LED DIMMING DRIVER. PROVIDE ALL REQUIRED ACCESSORIES FOR A COMPLETE INSTALLATION. * = FINISH AS SELECTED BY ARCHITECT.
SF	LITHONIA LIGHTING #WPX1-LED-P2-30K-MVOLT- E14WC-DBLXD OR APPROVED EQUAL	2,748 LUMEN 115 LM/W 3000K	24	MVOLT	B1-U0-G1	EXTERIOR SURFACE MOUNTED LED FIXTURE. FIXTURE SHALL BE PROVIDED WITH P2 POWER PACKAGE, 3000 KELVIN COLOR TEMPERATURE, AND 120-277 VOLTAGE. WHERE SHADED ON PLAN INDICATES PROVIDE INTEGRAL 90 MINUTE EM. BATTERY PACK. PROVIDE ALL REQUIRED MOUNTING PROVIDE ALL REQUIRED ACCESSORIES FOR A COMPLETE INSTALLATION.
SG	LITHONIA LIGHTING #DSX2-LED-P1-40K-80CRI-TFTM- MVOLT-SPA-HS-DBLXD OR APPROVED EQUAL	2,748 LUMEN 115 LM/W 4000K	409	MVOLT	B4-U0-G5	AREA LED FIXTURE. FIXTURE SHALL BE PROVIDED WITH TYPE IV FORWARD THROW OPTICS, 100 LED BOARD, P1 POWER PACKAGE, 4000K COLOR TEMPERATURE, MULTI-VOLTAGE, AND HOUSE SIDE SHIELD. PROVIDE ALL REQUIRED ACCESSORIES FOR A COMPLETE INSTALLATION.
SH	LITHONIA LIGHTING #DSX2-LED-P1-40K-80CRI-TFTM- MVOLT-WBA-HS-DBLXD OR APPROVED EQUAL	52,584 LUMEN 129 LM/W 4000K	409	MVOLT	B4-U0-G5	AREA LED FIXTURE. FIXTURE SHALL BE PROVIDED WITH TYPE IV FORWARD THROW OPTICS, 100 LED BOARD, P1 POWER PACKAGE, 4000K COLOR TEMPERATURE, MULTI-VOLTAGE, AND HOUSE SIDE SHIELD. PROVIDE ALL REQUIRED ACCESSORIES FOR A COMPLETE INSTALLATION.

A&F ENGINEERING GROUP, INC.
9320 BASELINE RD., SUITE C, RANCHO CUCAMONGA, CA 91701
TEL. (909) 941-3008 FAX (909) 941-8231

Not for permitting or construction

PBK
ARCHITECT PBK Architects, Inc.
PBK.com
SAN LUIS OBISPO
1327 Archer Street, Suite 110
San Luis Obispo, CA 93401
805-329-3076

FIRE STATION #44
COASTSIDE FIRE PROTECTION DISTRICT

501 STETSON STREET
MOSS BEACH, CA 94038

100% CD SET

BID SET

KEY PLAN

PLAN NORTH

TRUE NORTH

REGISTERED PROFESSIONAL ENGINEER
ROLAND L. SIFFORD
No. 617329
6/30/26
STATE OF CALIFORNIA

CLIENT
COASTSIDE FIRE
PROTECTION DISTRICT

PROJECT NUMBER
230137

DATE 2/14/2025

DRAWN BY: LS CHKED BY: RES

REVISIONS

#	DESCRIPTION	DATE
1	PLAN CHECK #1 RESPONSE	12/05/25
2	PLAN CHECK #2 RESPONSE	03/13/26
3	PLAN CHECK #3 RESPONSE	05/22/26
4	PLAN CHECK #4 RESPONSE	08/25/26

FIXTURE SCHEDULE

This document is for plan review only

E0.3

STATE OF CALIFORNIA
Indoor Lighting
CALIFORNIA ENERGY COMMISSION

CERTIFICATE OF COMPLIANCE		NRCC-LTI-E
This document is used to demonstrate compliance with requirements in 110.9, 110.12(c), 130.0, 130.1, 140.6 and 141.0(b)2 for indoor lighting scopes using the prescriptive path for nonresidential and hotel/motel occupancies. It is also used to document compliance with requirements in 160.5, 170.2(e) and 180.2(b)4 for indoor lighting scopes using the prescriptive path for multifamily occupancies. Multifamily includes dormitory and senior living facilities.		
Project Name: Coastside Fire Protection District Fire Station #44	**Report Page:**	**(Page 1 of 9)**
Project Address: 501 Stetson Street	**Date Prepared:**	5/28/2026

A. GENERAL INFORMATION

01	Project Location (city)	Moss Beach	04 Total Conditioned Floor Area (ft^2)	3,410
02	Climate Zone	3	05 Total Unconditioned Floor Area (ft^2)	5,208
03	Occupancy Types Within Project (select all that apply):		06 # of Stories (Habitable Above Grade)	1

● Classroom ● Commercial Industrial ● Gymnasium ● High-Rise Residential ● Office ● Support Areas ● Warehouse

B. PROJECT SCOPE

This table includes any lighting systems that are within the scope of the permit application and are demonstrating compliance using the prescriptive path outlined in 140.6 / 170.2(e) or 141.0(b)2 / 180.2(b)4 for alterations.

Scope of Work	Conditioned Spaces		Unconditioned Spaces	
01	02	03	04	05
My Project Consists of (check all that apply):	Calculation Method	Area (ft^2)	Calculation Method	Area (ft^2)
☒ New Lighting System	Area Category Method	3410	Area Category Method	5208
☐ New Lighting System - Parking Garage				
Total Area of Work (ft^2)	3410		5208	

STATE OF CALIFORNIA
Indoor Lighting
CALIFORNIA ENERGY COMMISSION

CERTIFICATE OF COMPLIANCE		NRCC-LTI-E
Project Name: Coastside Fire Protection District Fire Station #44	**Report Page:**	**(Page 2 of 9)**
	Date Prepared:	5/28/2026

C. COMPLIANCE RESULTS

If any cell on this table says "DOES NOT COMPLY" or "COMPLIES with Exceptional Conditions" refer to Table D. for guidance.

Lighting in conditioned and unconditioned spaces must not be combined for compliance per 140.6(b)1 / 170.2(e)	Allowed Lighting Power per 140.6(b) / 170.2(e) (Watts)							Adjusted Lighting Power per 140.6(a) / 170.2(e) (Watts)					Compliance Results
	01	02	03	04		05		06	07		08		09
	Complete Building 140.6(c)1	Area Category 140.6(c)2 / 170.2(e)4	Area Category Additional 140.6(c)2G / 170.2(e)4Av (+)	Tailored 140.6(c)3 / 170.2(e)4B (+)	=	**Total Allowed** (Watts)	≥	Total Designed (Watts)	Adjustments PAF Lighting Control Credits 140.6(a)2 / 170.2(e)1B (-)	=	**Total Adjusted** (Watts) *Includes Adjustments		**05 must be >= 08 140.6 / 170.2(e)**
	(See Table I)	(See Table I)	(See Table J)	(See Table K)				(See Table F)	(See Table P)				
Conditioned		1,749.2	0		=	1,749	≥	1,160	0	=	1160		COMPLIES
Unconditioned		3,169.4	0		=	3,170	≥	1,655	0	=	1655		COMPLIES
Controls Compliance (See Table H for Details)													COMPLIES
Rated Power Reduction Compliance (See Table Q for Details)													

D. EXCEPTIONAL CONDITIONS

This table is auto-filled with uneditable comments because of selections made or data entered in tables throughout the form.

E. ADDITIONAL REMARKS

This table includes remarks made by the permit applicant to the Authority Having Jurisdiction.

STATE OF CALIFORNIA
Indoor Lighting
CALIFORNIA ENERGY COMMISSION

CERTIFICATE OF COMPLIANCE		NRCC-LTI-E
Project Name: Coastside Fire Protection District Fire Station #44	**Report Page:**	**(Page 3 of 9)**
	Date Prepared:	5/28/2026

F. INDOOR LIGHTING FIXTURE SCHEDULE

This table includes all planned permanent and portable lighting other than dwelling unit/ hotel/ motel room lighting. Multifamily dwelling unit and hotel/motel room lighting is documented in Table T. If using Table T to document lighting in multifamily common use areas providing shared provisions for living, eating, cooking or sanitation, those luminaires are not included here.

Designed Wattage: Conditioned Spaces

01	02	03	04	05	06	07	08	09	10	
Name or Item Tag	Complete Luminaire Description	Modular (Track) Fixture	Small Aperture & Color Change[1]	Watts per luminaire[2]	How is Wattage determined	Total Number of Luminaires	Excluded per 140.6(a)3 / 170.2(e)2C	Design Watts	Field Inspector	
									Pass	Fail
A	21w LED	No	NA	21	Mfr. Spec	18	No	378	☐	☐
C	18w LED	No	NA	18	Mfr. Spec	12	No	216	☐	☐
D	27w LED	No	NA	27	Mfr. Spec	2	No	54	☐	☐
J	31w LED	No	NA	31	Mfr. Spec	3	No	93	☐	☐
L	29w LED	No	NA	29	Mfr. Spec	5	No	145	☐	☐
M	27w LED	No	NA	27	Mfr. Spec	4	No	108	☐	☐
R	30w LED	No	NA	30	Mfr. Spec	2	No	60	☐	☐
V	14w LED	No	NA	14	Mfr. Spec	3	No	42	☐	☐
Z	32w LED	No	NA	32	Mfr. Spec	2	No	64	☐	☐
							Total Designed Watts: CONDITIONED SPACES	1,160		

Designed Wattage: Unconditioned Spaces

01	02	03	04	05	06	07	08	09	10	
Name or Item Tag	Complete Luminaire Description	Modular (Track) Fixture	Small Aperture & Color Change[1]	Watts per luminaire[2]	How is Wattage determined	Total Number of Luminaires	Excluded per 140.6(a)3 / 170.2(e)2C	Design Watts	Field Inspector	
									Pass	Fail
C	18w LED	No	NA	18	Mfr. Spec	6	No	108	☐	☐
E	145w LED	No	NA	145	Mfr. Spec	1	No	145	☐	☐
F	20w LED	No	NA	20	Mfr. Spec	8	No	160	☐	☐
G	15w LED	No	NA	15	Mfr. Spec	4	No	60	☐	☐
I	33w LED	No	NA	33	Mfr. Spec	1	No	33	☐	☐
K	38w LED	No	NA	38	Mfr. Spec	11	No	418	☐	☐

STATE OF CALIFORNIA
Indoor Lighting
CALIFORNIA ENERGY COMMISSION

CERTIFICATE OF COMPLIANCE		NRCC-LTI-E
Project Name: Coastside Fire Protection District Fire Station #44	**Report Page:**	**(Page 4 of 9)**
	Date Prepared:	5/28/2026

F. INDOOR LIGHTING FIXTURE SCHEDULE

L	29w LED	No	NA	29	Mfr. Spec	6	No	174	☐	☐
M	27w LED	No	NA	27	Mfr. Spec	3	No	81	☐	☐
N	27w LED	No	NA	27	Mfr. Spec	4	No	108	☐	☐
O	21w LED	No	NA	21	Mfr. Spec	2	No	42	☐	☐
P	11w LED	No	NA	11	Mfr. Spec	2	No	22	☐	☐
Q	38w LED	No	NA	38	Mfr. Spec	2	No	76	☐	☐
Y	38w LED	No	NA	38	Mfr. Spec	6	No	228	☐	☐
							Total Designed Watts: UNCONDITIONED SPACES	1,655		

[1]*FOOTNOTE: Design Watts for small aperture and color changing luminaires which qualify per 140.6(a)4B / 170.2(e)2D is adjusted to be 75% /80% of their rated wattage. Table F automatically makes this adjustment, the permit applicant should enter full rated wattage in column 05.*

[2]*Authority Having Jurisdiction may ask for Luminaire cut sheets to confirm wattage used for compliance per 130.0(c) / 160.5(b). Wattage used must be the maximum rated for the luminaire, not the lamp.*

G. MODULAR LIGHTING SYSTEMS

This section does not apply to this project.

H. INDOOR LIGHTING CONTROLS (Not including PAFs)

This table includes lighting controls for conditioned and unconditioned spaces.

Building Level Controls

01	02	03	
		Field Inspector	
		Pass	Fail
Mandatory Demand Response 110.12(c)	Shut-off controls 130.1(c) / 160.5(b)4C		
NA < 4,000W subject to multilevel	Whole Building Auto Time Switch	☐	☐

STATE OF CALIFORNIA
Indoor Lighting
CALIFORNIA ENERGY COMMISSION

CERTIFICATE OF COMPLIANCE		NRCC-LTI-E
Project Name: Coastside Fire Protection District Fire Station #44	**Report Page:**	**(Page 6 of 9)**
	Date Prepared:	5/28/2026

I. LIGHTING POWER ALLOWANCE: COMPLETE BUILDING OR AREA CATEGORY METHODS

Locker Room	Locker/Dressing Room	0.45	252	113.4	No	No
Lounge, Breakroom, or Waiting Area	Lounge	0.55	304	167.2	No	No
		TOTALS:	3,410	1,749.2	See Tables J, or P for detail	

Unconditioned Spaces

01	02	03	04	05	06	
Area Description	Complete Building or Area Category Primary Function Area	Allowed Density (W/ft^2)	Area (ft^2)	Allowed Wattage (Watts)	Additional Allowance / Adjustment	
					Area Category	PAF
Stairwell	Stairwell	0.6	411	246.6	No	No
Restrooms	Restroom	0.65	529	343.8	No	No
High Bay	General Commercial Industrial Work Area High Bay	0.65	2,872	1,866.8	No	No
Janitor Closets	All Other Space Types	0.4	100	40	No	No
Classroom, Lecture, Training, Vocational Areas	Classroom, Lecture, or Training Vocational	0.6	498	298.8	No	No
Storage	Commercial Industrial Warehouse	0.4	472	188.8	No	No
Low Bay	General Commercial Industrial Work AreaLow Bay	0.6	253	151.8	No	No
Laundry Area	Laundry	0.45	73	32.8	No	No
		TOTALS:	5,208	3,169.4	See Tables J, or P for detail	

J. ADDITIONAL ALLOWANCE: AREA CATEGORY METHOD QUALIFYING LIGHTING SYSTEM

This section does not apply to this project.

K. TAILORED METHOD GENERAL LIGHTING POWER ALLOWANCE

This section does not apply to this project.

STATE OF CALIFORNIA
Indoor Lighting
CALIFORNIA ENERGY COMMISSION

CERTIFICATE OF COMPLIANCE		NRCC-LTI-E
Project Name: Coastside Fire Protection District Fire Station #44	**Report Page:**	**(Page 7 of 9)**
	Date Prepared:	5/28/2026

L. ADDITIONAL LIGHTING ALLOWANCE: TAILORED WALL DISPLAY

This section does not apply to this project.

M. ADDITIONAL LIGHTING ALLOWANCE: TAILORED FLOOR AND TASK LIGHTING

This section does not apply to this project.

N. ADDITIONAL LIGHTING ALLOWANCE: TAILORED DECORATIVE /SPECIAL EFFECTS

This section does not apply to this project.

O. ADDITIONAL LIGHTING ALLOWANCE: TAILORED VERY VALUABLE MERCHANDISE

This section does not apply to this project.

P. POWER ADJUSTMENT: LIGHTING CONTROL CREDIT (POWER ADJUSTMENT FACTOR (PAF))

This section does not apply to this project.

Q. RATED POWER REDUCTION COMPLIANCE FOR ONE-FOR-ONE ALTERATIONS

This section does not apply to this project.

R. 80% LIGHTING POWER FOR ALL ALTERATIONS - CONTROLS EXCEPTIONS

This section does not apply to this project.

S. DAYLIGHT DESIGN POWER ADJUSTMENT FACTOR (PAF)

This section does not apply to this project.

STATE OF CALIFORNIA
Indoor Lighting
CALIFORNIA ENERGY COMMISSION

CERTIFICATE OF COMPLIANCE		NRCC-LTI-E
Project Name: Coastside Fire Protection District Fire Station #44	**Report Page:**	**(Page 8 of 9)**
	Date Prepared:	5/28/2026

T. DWELLING UNIT LIGHTING

This section does not apply to this project.

U. DECLARATION OF REQUIRED CERTIFICATES OF INSTALLATION

Selections have been made based on information provided in this document. If any selections have been changed by permit applicant, an explanation should be included in Table E. Additional Remarks. These documents must be provided to the building inspector during construction and can be found online

Form/Title
NRCI-LTI-E - Must be submitted for all buildings

V. DECLARATION OF REQUIRED CERTIFICATES OF ACCEPTANCE

Selections have been made based on information provided in this document. If any selections have been changed by the permit applicant, an explanation should be included in Table E. Additional Remarks. These documents must be provided to the building inspector during construction and any with "-A" in the form name must be completed through an Acceptance Test Technician Certification Provider (ATTCP). For more information visit: http://www.energy.ca.gov/title24/attcp/providers.html

Form/Title	Systems/Spaces To Be Field Verified
NRCA-LTI-02-A - Must be submitted for occupancy sensors and automatic time switch controls.	Whole Building Time Switch; Whole Building;

STATE OF CALIFORNIA
Indoor Lighting
CALIFORNIA ENERGY COMMISSION

CERTIFICATE OF COMPLIANCE		NRCC-LTI-E
Project Name: Coastside Fire Protection District Fire Station #44	**Report Page:**	**(Page 9 of 9)**
Project Address: 501 Stetson Street	**Date Prepared:**	5/28/2026

DOCUMENTATION AUTHOR'S DECLARATION STATEMENT

I certify that this Certificate of Compliance documentation is accurate and complete.

Documentation Author Name: Luis E. Flores	Documentation Author Signature:
Company: A&F Engineering Group, Inc.	Signature Date: 2026-05-28
Address: 9320 Baseline Rd., Suite C	CEA/ HERS Certification Identification (if applicable):
City/State/Zip: Rancho Cucamonga CA 91701	Phone: (909)941-3008

RESPONSIBLE PERSON'S DECLARATION STATEMENT

I certify the following under penalty of perjury, under the laws of the State of California:

1. The information provided on this Certificate of Compliance is true and correct.
2. I am eligible under Division 3 of the Business and Professions Code to accept responsibility for the building design or system design identified on this Certificate of Compliance (responsible designer)
3. The energy features and performance specifications, materials, components, and manufactured devices for the building design or system design identified on this Certificate of Compliance conform to the requirements of Title 24, Part 1 and Part 6 of the California Code of Regulations.
4. The building design features or system design features identified on this Certificate of Compliance are consistent with the information provided on other applicable compliance documents, worksheets, calculations, plans and specifications submitted to the enforcement agency for approval with this building permit application.
5. I will ensure that a completed signed copy of this Certificate of Compliance shall be made available with the building permit(s) issued for the building, and made available to the enforcement agency for all applicable inspections. I understand that a completed signed copy of this Certificate of Compliance is required to be included with the documentation the builder provides to the building owner at occupancy.

Responsible Designer Name: Rolando E. Sotelo	Responsible Designer Signature:
Company: A&F Engineering Group, Inc.	Date Signed: 2026-05-28
Address: 9320 Baseline Rd., Suite C	License: E17229
City/State/Zip: Rancho Cucamonga CA 91701	Phone: (909)941-3008

A&F ENGINEERING GROUP, INC.
9320 BASELINE RD., SUITE C, RANCHO CUCAMONGA, CA 91701
TEL. (909) 941-3008 FAX (909) 941-8211

Not for permitting or construction

PBK
ARCHITECT PBK Architects, Inc.
PBK.com
SAN LUIS OBISPO
1327 Archer Street, Suite 110
San Luis Obispo, CA 93401
805-329-3076

FIRE STATION #44
COASTSIDE FIRE PROTECTION DISTRICT

501 STETSON STREET
MOSS BEACH, CA 94038

100% CD SET

COASTSIDE FIRE PROTECTION DISTRICT EST. 2002

BID SET

KEY PLAN
PLAN NORTH
TRUE NORTH

REGISTERED PROFESSIONAL ENGINEER
ROLANDO E. SOTELO
No. E17229
9/30/26
ELECTRICAL
STATE OF CALIFORNIA

CLIENT
COASTSIDE FIRE PROTECTION DISTRICT

PROJECT NUMBER
230137

DATE 2/14/2025

DRAWN BY: LS CHKED BY: RES

REVISIONS

#	DESCRIPTION	DATE
1	PLAN CHECK #1 RESPONSE	12/05/25
2	PLAN CHECK #2 RESPONSE	03/13/26
3	PLAN CHECK #3 RESPONSE	05/22/26
4	PLAN CHECK #4 RESPONSE	08/25/26

TITLE 24 COMPLIANCE FORMS

This document is for plan review only

E0.4

STATE OF CALIFORNIA
Outdoor Lighting
CALIFORNIA ENERGY COMMISSION

CERTIFICATE OF COMPLIANCE		NRCC-LTO-E
This document is used to demonstrate compliance with requirements in 110.9, 130.0, 130.2, 140.7, and 141.0(b)2l, for outdoor lighting scopes using the prescriptive path for nonresidential and hotel/motel occupancies. It is also used to document compliance with requirements in 160.5, 170.2(e)6, 180.1(a) and 180.2(b)4Bv for outdoor lighting scopes using the prescriptive path for multifamily and mixed-use occupancies. Multifamily includes dormitory and senior living facilities.		
Project Name: Coastside Fire Protection District Fire Station #44	**Report Page:**	**(Page 1 of 7)**
Project Address: 501 Stetson Street	**Date Prepared:**	5/28/2026

A. GENERAL INFORMATION

01	Project Location (city)	Moss Beach	04 Total Illuminated Hardscape Area (ft²)	10567
02	Climate Zone	3		
03	Outdoor Lighting Zone per Title 24 Part 1	10.114 or as designated by Authority Having Jurisdiction (AHJ):		

☐ LZ-0: Very Low - Undeveloped Parkland ☒ LZ-2: Moderate - Urban Clusters ☐ LZ-4: High - Must be reviewed by CA Energy Commission for Approval
☐ LZ-1: Low - Rural Areas ☐ LZ-3: Moderately High - Urban Areas

05 Occupancy Types within Project

● Classroom ● Commercial Industrial ● Gymnasium ● ● Office ● Support Areas ● Warehouse

B. PROJECT SCOPE

This table includes outdoor lighting systems that are within the scope of the permit application and are demonstrating compliance using the prescriptive path outlined in 140.7 / 170.2(e)6 or 141.0(b)2L / 180.2(b)4Bv for alterations.

My Project Consists of:

01	02
☒ New Lighting System	Must Comply with Allowances from 140.7 / 170.2(e)6
☐ Altered Lighting System	Is your alteration increasing the connected lighting load (Watts)? ○ Yes ○ No

03	04	05
% of Existing Luminaires Being Altered[1]	Sum Total of Luminaires Being Added or Altered	Calculation Method
☐ < 10% ☐ >= 10% and < 50% ☐ >= 50%		

Please proceed to Table F. Outdoor Lighting Fixture Schedule to define the project's luminaires.

[1] FOOTNOTES: % of Existing Luminaires Being Altered = (Sum Total of Luminaires Being Added or Altered / Existing Luminaires within the Scope of the Permit Application) x 100.

STATE OF CALIFORNIA
Outdoor Lighting
CALIFORNIA ENERGY COMMISSION

CERTIFICATE OF COMPLIANCE		NRCC-LTO-E
Project Name: Coastside Fire Protection District Fire Station #44	**Report Page:**	**(Page 2 of 7)**
	Date Prepared:	5/28/2026

C. COMPLIANCE RESULTS

Results in this table are automatically calculated from data input and calculations in Tables F through N. Note: If any cell on this table says "COMPLIES with Exceptional Conditions" refer to Table D. Exceptional Conditions for guidance or see applicable Table referenced below.

Calculations of Total Allowed Lighting Power (Watts) 140.7 / 170.2(e)6 or 141.0(b)2L / 180.2(b)4Bv											Compliance Results		
01		02		03		04		05		06	07	08	09
General Hardscape Allowance 140.7(d)1 / 170.2(e)6 (See Table I)	+	Per Application 140.7(d)2 / 170.2(e)6 (See Table J)	+	Sales Frontage 140.7(d)2 (See Table K)	+	Ornamental 140.7(d)2 / 170.2(e)6 (See Table L)	+	Per Specific Area 140.7(d)2 / 170.2(e)6 (See Table M)	OR	Existing Power Allowance 141.0(b)2L / 180.2(b)4Bv (See Table N)	= **Total Allowed** (Watts)	≥ **Total Actual** (Watts)	**07 must be >= 08**
642	+	48	+	---	+	---	+	---	OR	---	= 690	≥ 682	COMPLIES
Shielding Compliance (See Table G for Details)													N/A
Controls Compliance (See Table H for Details)													COMPLIES

D. EXCEPTIONAL CONDITIONS

This table is auto-filled with uneditable comments because of selections made or data entered in tables throughout the form.

E. ADDITIONAL REMARKS

This table includes remarks made by the permit applicant to the Authority Having Jurisdiction.

STATE OF CALIFORNIA
Outdoor Lighting
CALIFORNIA ENERGY COMMISSION

CERTIFICATE OF COMPLIANCE		NRCC-LTO-E
Project Name: Coastside Fire Protection District Fire Station #44	**Report Page:**	**(Page 3 of 7)**
	Date Prepared:	5/28/2026

F. OUTDOOR LIGHTING FIXTURE SCHEDULE

For new or altered lighting systems demonstrating compliance with 140.7 / 170.2(e)6 all new luminaires being installed and any existing luminaires remaining or being moved within the spaces covered by the permit application are included in the Table below. For altered lighting systems using the Existing Power method per 141.0(b)2L only new luminaires being installed and replacement luminaires being installed as part of the project scope are included (ie, existing luminaires remaining or existing luminaires being moved are not included). Outdoor lighting attached to multifamily buildings and controlled from the inside of a dwelling unit are included in Table H. and are not included here. All other multifamily outdoor lighting is included here.

Designed Wattage:

01	02		03	04	05	06	07	08	09	10	
Name or Item Tag	Complete Luminaire Description		Watts per luminaire[1, 2]	How is Wattage determined	Total Number Luminaires[2]	Luminaire Status[3]	Excluded per 140.7(a) / 170.2(e)6A	Design Watts	Cutoff Req. > 6,200 initial lumen output 130.2(b) / 160.5(c)1[4]	Field Inspector Pass	Field Inspector Fail
SA	24w LED	☐ Linear	24	Mfr. Spec	13	New	☐	312	NA: < 6200 lumens	☐	☐
SB	38w LED	☐ Linear	38	Mfr. Spec	2	New	☐	76	NA: < 6200 lumens	☐	☐
SC	10w LED	☐ Linear	10	Mfr. Spec	4	New	☐	40	NA: < 6200 lumens	☐	☐
SD	28w LED	☐ Linear	28	Mfr. Spec	8	New	☐	224	NA: < 6200 lumens	☐	☐
SE	15w LED	☐ Linear	15	Mfr. Spec	2	New	☐	30	NA: < 6200 lumens	☐	☐
							Total Design Watts:	682			

** NOTES: Selections with a * require a note in the space below explaining how compliance is achieved.*
EX: Luminaire is lighting a statue; EXCEPTION 2 to 130.2(b)

[1] FOOTNOTES: Authority Having Jurisdiction may ask for Luminaire cut sheets to confirm wattage used for compliance per 130.0(c) / 160.5(b)
[2] For linear luminaires, wattage should be indicated as W/lf instead of Watts/luminaire. Total linear feet should be indicated in column 05 instead of number of luminaires.
[3] Select "New" for new luminaires in a new outdoor lighting project, or for added luminaires in an alteration. Select "Altered" for replacement luminaires in an alteration. Select "Existing to Remain" for existing luminaires within the project scope that are not being altered and are remaining. Select "Existing Reinstalled" for existing luminaires which are being removed and reinstalled as part of the project scope.
[4] Compliance with mandatory shielding requirements is required for luminaires with initial lumen output >= 6,200 unless exempted by 130.2(b)/ 160.5(c)

STATE OF CALIFORNIA
Outdoor Lighting
CALIFORNIA ENERGY COMMISSION

CERTIFICATE OF COMPLIANCE		NRCC-LTO-E
Project Name: Coastside Fire Protection District Fire Station #44	**Report Page:**	**(Page 4 of 7)**
	Date Prepared:	5/28/2026

G. SHIELDING REQUIREMENTS (BUG)

This section does not apply to this project.

H. OUTDOOR LIGHTING CONTROLS

This table demonstrates compliance with controls requirements for all new or altered luminaires installed as part of the permit application. For alteration projects, luminaires which are existing to remain (ie untouched) and luminaires which are removed and reinstalled (wiring only) do not need to be included in this table even if they are within the spaces covered by the permit application.
Outdoor lighting for nonresidential buildings, parking garages and common service areas in multifamily buildings must be documented separately from outdoor lighting attached to multifamily buildings and controlled from the inside of a dwelling unit

Mandatory Controls for Nonresidential Occupancies, Parking Garages & Common Areas in Multifamily Buildings

01	02	03	04	05	
Area Description	Shut-Off 130.2(c)1 / 160.5(c)	Auto-Schedule 130.2(c)2 / 160.5(c)	Motion Sensor 130.2(c)3 / 160.5(c)	Field Inspector Pass	Field Inspector Fail
SA, SC, SD, SE, SF	Astronomical Timer	Provided	NA: Each Luminaire <= 40 Watts	☐	☐
SB	Astronomical Timer	Provided	Provided	☐	☐

[1] FOOTNOTE: Text has been abbreviated, please refer to Table 160.5-A to confirm compliance with the specific light source technologies listed.
[2] Authority having jurisdiction may ask for cutsheets or other documentation to confirm compliance of light source.
[3] Recessed luminaires marked for use in fire-rated installations, and recessed luminaires installed in non-insulated ceilings are excepted from ii and iii.

STATE OF CALIFORNIA
Outdoor Lighting
CALIFORNIA ENERGY COMMISSION

CERTIFICATE OF COMPLIANCE		NRCC-LTO-E
Project Name: Coastside Fire Protection District Fire Station #44	**Report Page:**	**(Page 5 of 7)**
	Date Prepared:	5/28/2026

I. LIGHTING POWER ALLOWANCE (per 140.7 / 170.2(e))

This table includes areas using allowance calculations per 140.7 / 170.2(e). General Hardscape Allowance is per Table 140.7-A/Table 170.2-R while "Use it or lose it" Allowances are per Table 140.7-B /Table 170.2-S. Indicate which allowances are being used to expand sections for user input. Luminaires that qualify for one of the "Use it or lose it" allowances shall not qualify for another "Use it or lose it" allowance.
Outdoor lighting attached to multifamily buildings and controlled from the inside of a dwelling unit are included in Table H. and are not included here. All other multifamily outdoor lighting is included here.

01			
☒ General Hardscape Allowance Table I (below)	"Use it or lose it" Allowance (select all that apply) (select all that apply)		
	☒ Per Application Table J	☐ Sales Frontage Table K	☐ Ornamental Table L	☐ Per Specific Area Table M

Calculated General Hardscape Lighting Power Allowance per Table 170.2-R for Multifamily & Multifamily Mixed-Use

02	03	04	05
Area Description	Area Wattage Allowance (AWA)		
	Illuminated Area (ft²)	Allowed Density (W/ft²)	Area Allowance (Watts)
	Initial Wattage Allowance for Entire Site (Watts):		
	Instances of Initial Wattage Allowance (LZ 0 only)[1]		
	Total General Hardscape Allowance (Watts):		

[1] FOOTNOTES: Number of entrances to parking areas, trail heads, fee payment kiosks, outhouses and toilet facilities on site where lighting is within project scope.

J. LIGHTING ALLOWANCE: PER APPLICATION

This table includes areas using the wattage allowance per application from Table 140.7-B / Table 170.2-S.

01	02	03	04	05	06	07	08	09	10
		CALCULATED ALLOWANCE (Watts)			DESIGN WATTS				
Area Description	Application per Table 140.7-B[1]	# of Locations	Allowance per Location[2]	Extra Allowance (Watts)	Luminaire Name or Item Tag	Watts per Luminaire	# of Luminaires	Design Watts[3]	Additional Allowance (Watts)
Generator Area	Uncovered Fuel Dispenser	1	77	77	SA	24	2	48	48
						Total Design Watts for this Area:		48	
							Total Allowance (Watts) All Areas:		48

[1] FOOTNOTES: Primary entrance applications are only available for senior care facilities, healthcare facilities, police stations, hospitals, fire stations, and emergency vehicle facilities.
[2] The Allowance per Location for ATMs is 100W for the first ATM and 35W for each additional per Table 140.7-B /Table 170.2-S.
[3] For luminaires indicated in Table F as linear, wattage in column 07 is W/lf instead of Watts/luminaire. Total linear feet should be indicated in column 08 instead of number of luminaires.

STATE OF CALIFORNIA
Outdoor Lighting
CALIFORNIA ENERGY COMMISSION

CERTIFICATE OF COMPLIANCE		NRCC-LTO-E
Project Name: Coastside Fire Protection District Fire Station #44	**Report Page:**	**(Page 6 of 7)**
	Date Prepared:	5/28/2026

K. LIGHTING ALLOWANCE: SALES FRONTAGE

This section does not apply to this project.

L. LIGHTING ALLOWANCE: ORNAMENTAL

This section does not apply to this project.

M. LIGHTING ALLOWANCE: PER SPECIFIC AREA

This section does not apply to this project.

N. EXISTING CONDITIONS POWER ALLOWANCE (alterations only)

This section does not apply to this project.

O. DECLARATION OF REQUIRED CERTIFICATES OF INSTALLATION

Selections have been made based on information provided in this document. If any selection has been changed by permit applicant, an explanation should be included in Table E. Additional Remarks. These documents must be provided to the building inspector during construction and can be found online

Form/Title
NRCI-LTO-E - Must be submitted for all buildings

P. DECLARATION OF REQUIRED CERTIFICATES OF ACCEPTANCE

Selections have been made based on information provided in this document. If any selection has been changed by permit applicant, an explanation should be included in Table E. Additional Remarks. These documents must be provided to the building inspector during construction and must be completed through an Acceptance Test Technician Certification Provider (ATTCP). For more information visit: http://www.energy.ca.gov/title24/attcp/providers.html

Form/Title	Systems/Spaces To Be Field Verified
NRCA-LTO-02-A - Must be submitted for all outdoor lighting controls except for alterations where controls are added to <= 20 luminaires.	SA, SC, SD, SE, SF; SB;

STATE OF CALIFORNIA
Outdoor Lighting
CALIFORNIA ENERGY COMMISSION

CERTIFICATE OF COMPLIANCE		NRCC-LTO-E
Project Name: Coastside Fire Protection District Fire Station #44	**Report Page:**	**(Page 7 of 7)**
Project Address: 501 Stetson Street	**Date Prepared:**	5/28/2026

DOCUMENTATION AUTHOR'S DECLARATION STATEMENT

I certify that this Certificate of Compliance documentation is accurate and complete.

Documentation Author Name: Luis E. Flores	Documentation Author Signature:
Company: A&F Engineering Group, Inc.	Signature Date: 2026-05-28
Address: 9320 Baseline Rd., Suite C	CEA/ HERS Certification Identification (if applicable):
City/State/Zip: Rancho Cucamonga CA 91701	Phone: (909)941-3008

RESPONSIBLE PERSON'S DECLARATION STATEMENT

I certify the following under penalty of perjury, under the laws of the State of California:
1. The information provided on this Certificate of Compliance is true and correct.
2. I am eligible under Division 3 of the Business and Professions Code to accept responsibility for the building design or system design identified on this Certificate of Compliance (responsible designer)
3. The energy features and performance specifications, materials, components, and manufactured devices for the building design or system design identified on this Certificate of Compliance conform to the requirements of Title 24, Part 1 and Part 6 of the California Code of Regulations.
4. The building design features or system design features identified on this Certificate of Compliance are consistent with the information provided on other applicable compliance documents, worksheets, calculations, plans and specifications submitted to the enforcement agency for approval with this building permit application.
5. I will ensure that a completed signed copy of this Certificate of Compliance shall be made available with the building permit(s) issued for the building, and made available to the enforcement agency for all applicable inspections. I understand that a completed signed copy of this Certificate of Compliance is required to be included with the documentation the builder provides to the building owner at occupancy.

Responsible Designer Name: Rolando E, Sotelo	Responsible Designer Signature:
Company: A&F Engineering Group, Inc.	Date Signed: 2026-05-28
Address: 9320 Baseline Rd., Suite C	License: E17229
City/State/Zip: Rancho Cucamonga CA 91701	Phone: (909)941-3008

A&F ENGINEERING GROUP, INC.
9320 BASELINE RD. SUITE C, RANCHO CUCAMONGA, CA 91701
TEL (909) 941-3008 FAX (909) 941-8211

Not for permitting or construction

PBK
ARCHITECT PBK Architects, Inc.
PBK.com
SAN LUIS OBISPO
1327 Archer Street, Suite 110
San Luis Obispo, CA 93401
805-329-3076

FIRE STATION #44
COASTSIDE FIRE PROTECTION DISTRICT

501 STETSON STREET
MOSS BEACH, CA 94038
100% CD SET

COASTSIDE FIRE PROTECTION DISTRICT

BID SET

KEY PLAN
PLAN NORTH TRUE NORTH

REGISTERED PROFESSIONAL ENGINEER ROLANDO E. SOTELO No. E17229 6/30/26 STATE OF CALIFORNIA

CLIENT	COASTSIDE FIRE PROTECTION DISTRICT
PROJECT NUMBER	230137
DATE	2/14/2025
DRAWN BY: LS	CHKED BY: RES

REVISIONS

#	DESCRIPTION	DATE
1	PLAN CHECK #1 RESPONSE	12/05/25
2	PLAN CHECK #2 RESPONSE	03/13/26
3	PLAN CHECK #3 RESPONSE	05/22/26
4	PLAN CHECK #4 RESPONSE	08/25/26

TITLE 24 COMPLIANCE FORMS

This document is for plan review only

E0.5

STATE OF CALIFORNIA
Solar And Battery
CALIFORNIA ENERGY COMMISSION

CERTIFICATE OF COMPLIANCE **NRCC-SAB-E**

This document is used to demonstrate compliance with prescriptive PV and battery requirements in 140.10/ 170.2 for nonresidential, multifamily and mixed-use buildings and prescriptive solar thermal requirements in 170.2(d)3C for multifamily and hotel/ motel occupancies. When PV/battery/solar thermal requirements don't apply or are traded using the performance approach, this document demonstrates compliance with mandatory solar readiness requirements in 110.10/ 160.8 for newly constructed buildings which are either multifamily ten stories or fewer, hotel/motel ten stories or fewer or all other nonresidential buildings three stories or fewer. It is also used to demonstrate compliance with solar readiness in 110.10/ 160.8 for additions to nonresidential, multifamily or hotel/motel building types which add more than 2,000 ft^2 of roof area. Alterations, or additions of less than 2,000 ft^2 of roof area, are not required to comply with solar readiness, solar PV and battery requirements and do not need to complete this document.

Project Name:	Coastside Fire Protection District Fire Station #44	**Report Page:**	**(Page 1 of 5)**
Project Address:	501 Stetson Street	**Date Prepared:**	5/28/2026

A. GENERAL INFORMATION

01	Project Location (city)	Moss Beach	04	Building Occupancies	Commercial IndustrialGymnasiumHigh-Rise ResidentialOfficeSupport AreasWarehouse
02	Climate Zone	3	05	Construction Type	New construction w/ roof <=533 ft^2
03	Conditioned Floor Area (ft^2)	4520	06	Number of Stories	Bldg <= 3 stories

B. PROJECT SCOPE

The compliance path the project is using to comply per 110.10(b)1B/ 140.10/ 170.2(g and h) is indicated below.

Compliance with Solar Photovoltaic (PV) and Battery Requirements in 140.10/ 170.2(g and h)

		01
☒	Provided PV system and battery storage sized per 140.10/ 170.2 (g and h)	The project has included an installed PV system and battery storage system per requirements in 140.10/ 170.2(g and h) as documented in Table J.
☐	Exception to PV and Battery: Not enough Solar Access Roof Area	The total of all available Solar Access Roof Area(s) of the project site is less than three percent of the conditioned floor area as documented in Table J.
☐	Exception to PV and Battery: Required PV < 4kW	The required PV system size is less than 4 kW dc as documented in Table J..
☐	Exception to PV and Battery: No contiguous Solar Access Roof Area	The Solar Access Roof Area(s) of the project site contains less than 80 contiguous square feet as documented in Table J.
☐	Exception to PV and Battery: Can't meet snow load	The project has a roof design where the enforcement authority has verified it is not possible for the PV system, including panels, modules, components, supports, and attachments to the roof structure, to meet ASCE 7-16 Chapter 7, Snow Loads.
☐	Exception to PV and Battery: Multi-tenant without VNEM or Community Solar	The project is a multi-tenant building in an area where a load serving entity does not provide either a Virtual Net Metering (VNEM) or community solar program.
☐	The prescriptive PV/battery requirement has been traded off using the performance compliance approach as documented on the PRF Certificate of Compliance form.	

STATE OF CALIFORNIA
Solar And Battery
CALIFORNIA ENERGY COMMISSION

CERTIFICATE OF COMPLIANCE **NRCC-SAB-E**

Project Name:	Coastside Fire Protection District Fire Station #44	**Report Page:**	**(Page 2 of 5)**
		Date Prepared:	5/28/2026

Compliance with Solar Thermal Water Heating Requirements in 170.2(d)3C (Multifamily and hotel/ motel occupancies only)

	01
☐	The project includes a hotel/motel or multifamily occupancy with a gas or propane central water-heating system (serves 2+ dwelling units) and includes a permanently installed domestic solar water-heating system to comply with 170.2(d)3C and Reference Residential Appendix RA4, as documented in Table H. Compliance meets Exception 2 to solar ready requirements in 110.10(b).

C. COMPLIANCE RESULTS

Results in this table are automatically calculated from data input and calculations in Tables F through I. Note: If any cell on this table says "DOES NOT COMPLY" or "COMPLIES with Exceptional Conditions" refer to Table D. for guidance or see the applicable Table referenced below.

Allocated Solar Zone			Installed PV System				Installed SWH System				Smart Tstat and Alternative EE Measure		Compliance Results
01		02		03		04		05		06	07	08	
Required Minimum Area (ft^2)	<=	Designated Area (ft^2)	OR	Required Minimum DC Power Rating (Watts)	<=	Designed DC Power Rating (Watts)	OR	Required Minimum Solar Savings Fraction	<=	Designed/Rated Solar Savings Fraction	JA5 Compliant Thermostat Specified?	Alternative Energy Efficiency Measure	COMPLIES
(See Table F)				(See Tables G or J)				(See Table H)			(See Table I)		
	<=		OR	8,832	<=	30,000	OR		<=		OR		
Location in construction documents showing the location for inverters and metering equipment and a pathway for the routing of conduit/ plumbing to the electrical service/ water heating system per §110.10(c).													
Battery storage system design meets the minimum requirements in Joint Appendix JA12 and the minimum energy (kWh)/ power (kW) capacity per Table J.													COMPLIES

D. EXCEPTIONAL CONDITIONS

This table is auto-filled with uneditable comments because of selections made or data entered in tables throughout the form.

E. ADDITIONAL REMARKS

This table is includes remarks made by the permit applicant to the Authority Having Jurisdiction.

STATE OF CALIFORNIA
Solar And Battery
CALIFORNIA ENERGY COMMISSION

CERTIFICATE OF COMPLIANCE **NRCC-SAB-E**

Project Name:	Coastside Fire Protection District Fire Station #44	**Report Page:**	**(Page 3 of 5)**
		Date Prepared:	5/28/2026

F. ALLOCATED SOLAR ZONE

This section does not apply to this project.

G. PERMANENTLY INSTALLED SOLAR PV FOR SOLAR READY EXCEPTION

This section does not apply to this project.

H. PERMANENTLY INSTALLED SOLAR HOT WATER SYSTEMS

This section does not apply to this project.

I. SMART THERMOSTATS AND ALTERNATIVE EFFICIENCY MEASURE FOR SOLAR READY EXCEPTION

This section does not apply to this project.

STATE OF CALIFORNIA
Solar And Battery
CALIFORNIA ENERGY COMMISSION

CERTIFICATE OF COMPLIANCE **NRCC-SAB-E**

Project Name:	Coastside Fire Protection District Fire Station #44	**Report Page:**	**(Page 4 of 5)**
		Date Prepared:	5/28/2026

J. PHOTOVOLTAIC (PV) AND BATTERY SYSTEMS

This table documents compliance with prescriptive photovoltaic and battery system requirements in 140.10/ 170.2(g and h). Unless the project meets one of the listed exceptions, or trades-off PV in an energy model using performance path, 140.10/ 170.2(g and h) requires installed photovoltaic and battery systems for newly constructed buildings. The installed PV systems must meet the minimum requirements in Joint Appendix 11.

Photovoltaic (PV) System

01	02	03	04	05	06	07	08
Occupancy	Conditioned Floor Area (ft^2)	Area of New Roof[1] (ft^2)	Roof Area < 70% Solar Access[2] (ft^2)	Plansheet or Document showing Solar Access Calculations	Occupied Roof Area[3] (ft^2)	Solar Access Roof Area (SARA) (ft^2)	Min Size of PV System Required (kWdc)
Office	3,410	2,240	0		0	2,240	8.83
Total Min Size PV System Required for all Spaces (kWdc):							8.83
Total Size PV System in Design (kWdc):							30

[1]FOOTNOTES: Includes the area of the building's roof space capable of structurally supporting a PV system and the area of all roof space on covered parking areas, carports, and all other newly constructed structures on the site that are compatible with supporting a PV system per Title 24, Part 2 Section 1511.2.
[2]Solar access must be determined using CEC approved solar access calculation tools found at https://www.energy.ca.gov/programs-and-topics/programs/building-energy-efficiency-standards/solar-assessment-tools.
[3]As specified by CBC Section 503.1.4.

K. DECLARATION OF REQUIRED CERTIFICATES OF INSTALLATION

Selections have been made based on information provided in this document. If any selections have been changed by the permit applicant, an explanation should be included Table E. Additional Remarks and ExceptionalConditionMessageCCSABE += UserChangedSelectionInCI. These documents must be provided to the building inspector during construction and can be found online

Form/Title
NRCI-SAB-01-E - Must be submitted for all buildings that must comply with solar readiness or PV/Battery requirements.

L. DECLARATION OF REQUIRED CERTIFICATES OF ACCEPTANCE

There are no forms required for this project.

STATE OF CALIFORNIA
Solar And Battery
CALIFORNIA ENERGY COMMISSION

CERTIFICATE OF COMPLIANCE **NRCC-SAB-E**

Project Name:	Coastside Fire Protection District Fire Station #44	**Report Page:**	**(Page 5 of 5)**
Project Address:	501 Stetson Street	**Date Prepared:**	5/28/2026

DOCUMENTATION AUTHOR'S DECLARATION STATEMENT

I certify that this Certificate of Compliance documentation is accurate and complete.

Documentation Author Name: Luis E. Flores	Documentation Author Signature:
Company: A&F Engineering Group, Inc.	Signature Date: 2026-05-28
Address: 9320 Baseline Rd., Suite C	CEA/ HERS Certification Identification (if applicable):
City/State/Zip: Rancho Cucamonga CA 91701	Phone: (909)941-3008

RESPONSIBLE PERSON'S DECLARATION STATEMENT

I certify the following under penalty of perjury, under the laws of the State of California:

1. The information provided on this Certificate of Compliance is true and correct.
2. I am eligible under Division 3 of the Business and Professions Code to accept responsibility for the building design or system design identified on this Certificate of Compliance (responsible designer)
3. The energy features and performance specifications, materials, components, and manufactured devices for the building design or system design identified on this Certificate of Compliance conform to the requirements of Title 24, Part 1 and Part 6 of the California Code of Regulations.
4. The building design features or system design features identified on this Certificate of Compliance are consistent with the information provided on other applicable compliance documents, worksheets, calculations, plans and specifications submitted to the enforcement agency for approval with this building permit application.
5. I will ensure that a completed signed copy of this Certificate of Compliance shall be made available with the building permit(s) issued for the building, and made available to the enforcement agency for all applicable inspections. I understand that a completed signed copy of this Certificate of Compliance is required to be included with the documentation the builder provides to the building owner at occupancy.

Responsible Designer Name: Rolando E. Sotelo	Responsible Designer Signature:
Company: A&F Engineering Group, Inc.	Date Signed: 2026-05-28
Address: 9320 Baseline Rd., Suite C	License: E17229
City/State/Zip: Rancho Cucamonga CA 91701	Phone: (909)941-3008

A&F ENGINEERING GROUP, INC.
9320 BASELINE RD., SUITE C, RANCHO CUCAMONGA, CA 91701
TEL. (909) 941-3008 FAX (909) 941-8231

Not for permitting or construction

PBK
ARCHITECT PBK Architects, Inc.
PBK.com
SAN LUIS OBISPO
1327 Archer Street, Suite 110
San Luis Obispo, CA 93401
805-329-3076

FIRE STATION #44
COASTSIDE FIRE PROTECTION DISTRICT

501 STETSON STREET
MOSS BEACH, CA 94038
100% CD SET

COASTSIDE FIRE PROTECTION DISTRICT EST 2007

BID SET

KEY PLAN

PLAN NORTH
TRUE NORTH

REGISTERED PROFESSIONAL ENGINEER
ROLANDO L. SOTELO
No. E17229
6/30/26
STATE OF CALIFORNIA

CLIENT	COASTSIDE FIRE PROTECTION DISTRICT
PROJECT NUMBER	230137
DATE	2/14/2025
DRAWN BY: LS	CHKED BY: RES

REVISIONS

#	DESCRIPTION	DATE
1	PLAN CHECK #1 RESPONSE	12/05/25
2	PLAN CHECK #2 RESPONSE	03/13/26
3	PLAN CHECK #3 RESPONSE	05/02/26
4	PLAN CHECK #4 RESPONSE	08/25/26

TITLE 24 COMPLIANCE FORMS

This document is for plan review only

E0.6

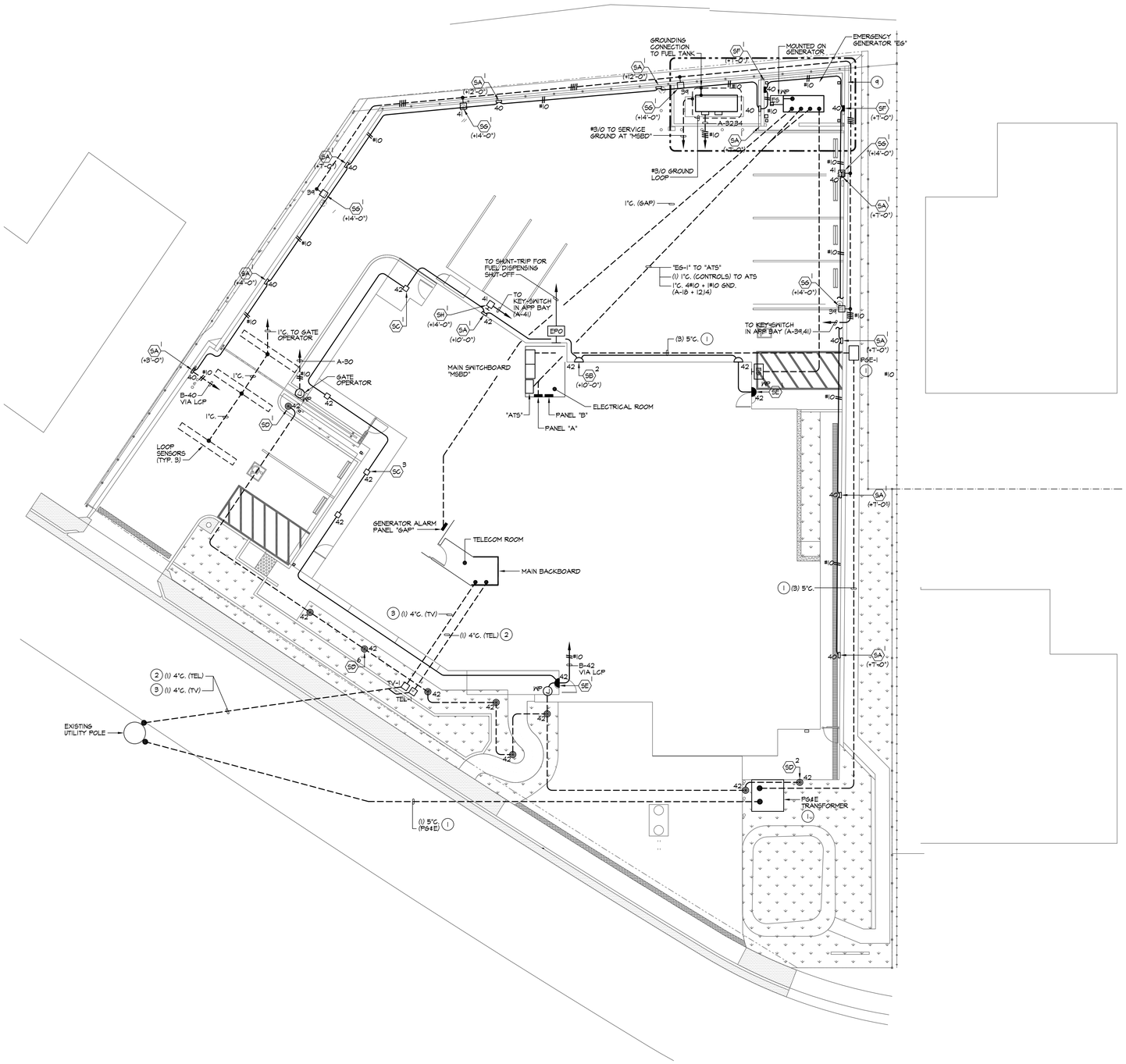

SITE PLAN | 1" = 10'-0" | 1

PLAN NOTES:

1. THE ELECTRICAL CONTRACTOR SHALL CONTACT THE PACIFIC GAS AND ELECTRIC (PG&E) SERVICE PLANNER, UPON AWARD OF CONTRACT AND OBTAIN A COPY OF THE PG&E ENGINEERING DRAWINGS PRIOR TO INSTALLING THE SERVICE CONDUIT, DUCTS, PAD MOUNT, RISERS, PULL BOXES, PROTECTIVE COVERING, ETC. INDICATED ON THIS PLAN. ALL WORK INDICATED ON THE UTILITY COMPANY ENGINEERING DRAWINGS, WHETHER SHOWN ON THIS PLAN OR NOT, SHALL BE PROVIDED AND INSTALLED BY THE CONTRACTOR. THE CONTRACTOR SHALL INSTALL THE SERVICE IN COMPLIANCE WITH THE SERVING UTILITY COMPANY REQUIREMENTS AND ALL UTILITY COMPANY WORK SHALL BE INSPECTED AND APPROVED BY THE SERVING UTILITY.

   UTILITY COMPANY ENGINEERING AND PERMIT FEES ASSOCIATED WITH THE WORK SHOWN AND INDICATED ON THE UTILITY COMPANY ENGINEERING DRAWINGS SHALL BE PAID BY THE CONTRACTOR AND REIMBURSED BY THE OWNER. THE CONTRACTOR SHALL NOTIFY THE ARCHITECT / OWNER OF ANY DISCREPANCIES BETWEEN THE UTILITY COMPANY ENGINEERING DRAWINGS AND THIS PLAN PRIOR TO PROCEEDING WITH THE WORK.

2. THE ELECTRICAL CONTRACTOR SHALL CONTACT THE TELEPHONE ENGINEER UPON AWARD OF CONTRACT AND OBTAIN A COPY OF THE TELEPHONE ENGINEERING DRAWINGS PRIOR TO INSTALLING THE SERVICE CONDUIT, DUCTS, RISERS, PULL BOXES, PROTECTIVE COVERING, ETC. INDICATED ON THIS PLAN. ALL WORK INDICATED ON THE UTILITY COMPANY ENGINEERING DRAWINGS, WHETHER SHOWN ON THIS PLAN OR NOT, SHALL BE PROVIDED AND INSTALLED BY THE CONTRACTOR. THE CONTRACTOR SHALL INSTALL THE SERVICE IN COMPLIANCE WITH THE SERVING UTILITY COMPANY REQUIREMENTS AND ALL UTILITY COMPANY WORK SHALL BE INSPECTED AND APPROVED BY THE SERVING UTILITY.

   UTILITY COMPANY ENGINEERING AND PERMIT FEES ASSOCIATED WITH THE WORK SHOWN AND INDICATED ON THE UTILITY COMPANY ENGINEERING DRAWINGS SHALL BE PAID BY THE CONTRACTOR AND REIMBURSED BY THE OWNER. THE CONTRACTOR SHALL NOTIFY THE ARCHITECT/OWNER OF ANY DISCREPANCIES BETWEEN THE UTILITY COMPANY ENGINEERING DRAWINGS AND THIS PLAN PRIOR TO PROCEEDING WITH THE WORK.

3. THE ELECTRICAL CONTRACTOR SHALL CONTACT THE CABLE TV SERVICE PLANNER UPON AWARD OF CONTRACT AND OBTAIN A COPY OF THE COX CABLE TV ENGINEERING DRAWINGS PRIOR TO INSTALLING THE SERVICE CONDUITS, DUCTS, RISERS, PULL BOXES, PROTECTIVE COVERING, ETC. INDICATED ON THIS PLAN. ALL WORK INDICATED ON THE UTILITY COMPANY ENGINEERING DRAWINGS, WHETHER SHOWN ON THIS PLAN OR NOT, SHALL BE PROVIDED AND INSTALLED BY THE CONTRACTOR. THE CONTRACTOR SHALL INSTALL THE SERVICE IN COMPLIANCE WITH THE SERVING UTILITY COMPANY REQUIREMENTS AND ALL UTILITY COMPANY WORK SHALL BE INSPECTED AND APPROVED BY THE SERVING UTILITY.

   UTILITY COMPANY ENGINEERING AND PERMIT FEES ASSOCIATED WITH THE WORK SHOWN AND INDICATED ON THE UTILITY COMPANY ENGINEERING DRAWINGS SHALL BE PAID BY THE CONTRACTOR AND REIMBURSED BY THE OWNER. THE CONTRACTOR SHALL NOTIFY THE ARCHITECT/OWNER OF ANY DISCREPANCIES BETWEEN THE UTILITY COMPANY ENGINEERING DRAWINGS AND THIS PLAN PRIOR TO PROCEEDING WITH THE WORK.

4. CONDUIT ROUTING INDICATED ON THESE PLANS IS DIAGRAMMATIC. ACTUAL ROUTING OF UNDERGROUND CONDUITS SHALL BE COORDINATED IN THE FIELD TO AVOID INTERFERENCE WITH OTHER UTILITIES AND TRADES.
5. IT SHALL BE THIS CONTRACTOR'S RESPONSIBILITY TO MAINTAIN REQUIRED CLEARANCES BETWEEN UNDERGROUND ELECTRICAL CONDUITS AND FOOTINGS. CONDUIT STUB-UPS SHALL NOT BE INSTALLED IN FOOTINGS. EXACT METHOD FOR STUBBING-UP CONDUITS AT FOOTING LOCATIONS SHALL BE COORDINATED IN THE FIELD WITH THE GENERAL CONTRACTOR AND THE ARCHITECT.
6. REFER TO DRAWING E0.1, GENERAL NOTES, FOR ADDITIONAL REQUIREMENTS.
7. SEE SINGLE LINE DIAGRAM, DRAWING E0.2, FOR CONDUIT SIZE AND WIRE SIZE AND QUANTITIES REQUIRED FOR ALL ELECTRICAL EQUIPMENT.
8. CONDUIT AND WIRE INDICATED ON THE SINGLE LINE DIAGRAM, WHETHER SHOWN ON THIS DRAWING OR NOT, SHALL BE A PART OF THIS CONTRACT AND THE RESPONSIBILITY OF THIS CONTRACTOR TO PROVIDE REQUIRED ROUTING TO MEET THE INTENT OF THESE PLANS AND SPECIFICATIONS.
9. ALL CONDUIT / FITTINGS AND WIRING METHODS WITHIN THIS AREA SHALL BE IN COMPLIANCE WITH CLASS 1, DIVISION 2 INSTALLATION METHODS. PROVIDE CONDUIT SEALS PER C.E.C. ARTICLE 514 & 515.

LIGHTING CONTROL PANEL "LCP"

LCP NOTE:
UPON COMPLETION OF THE LIGHTING CONTROL PANEL INSTALLATION THE CONTRACTOR SHALL SCHEDULE A MEETING WITH THE OWNER TO OBTAIN PROGRAMMING REQUIREMENTS FOR EACH RELAY. THE CONTRACTOR SHALL PROGRAM THE SYSTEM BASED ON THE CITY REQUIREMENTS AND TEST THE SYSTEM IN THE PRESENCE OF THE OWNER. HE SHALL MAKE REQUIRED ADJUSTMENTS TO THE SYSTEM PROGRAMMING AS REQUIRED/REQUESTED BY THE CITY AT NO ADDITIONAL COST TO THE CONTRACT.

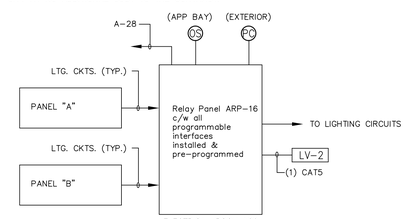

RELAY CABINET "ARP-16"

DESCRIPTION	Circuit Number	Control Letter	Control	LV Switch	Relay Number	Control Zone
SITE / AREA LIGHTS	B-40	a	T/C	----	1	1
EXTERIOR BUILDING LIGHTS	B-42	a	T/C	----	2	1
* FIRST FLOOR STEP LIGHTS	A-33	b	T/C	----	3	2
* SECOND FLOOR STEP LIGHTS	B-41	c	T/C	----	4	3
** APP BAY NIGHT LIGHTS	B-28	a,b	T/C	----	5	4
SPARE (TYP. 11)	----	--	--		6	--

* RELAY SHALL BE PROGRAMMED TO OPERATE FROM DUSK TO DAWN.
** RELAY SHALL BE PROGRAMMED TO INTERFACE WITH ALERTING SYSTEM FOR ON-OFF CONTROL DURING EMERGENCY CALLS.

ELEC. ROOM 109

RELAY CABINET - ARP
MANUFACTURER: ACUITY
1 = ARP-INTENCIE-NLT-16SPR-MVOLT-SC-FM

CONTROL LEGEND
T/C = TIME CLOCK
LV = LOW VOLTAGE SWITCH.
PC = PHOTOCELL

A&F ENGINEERING GROUP, INC.
9320 BASELINE RD., SUITE C, RANCHO CUCAMONGA, CA 91701
TEL. (909) 941-3008 FAX (909) 941-8211

"LCP" LIGHTING CONTROL PANEL | N.T.S. | 3

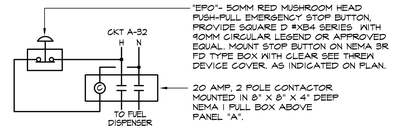

FUEL SYSTEM EPO DIAGRAM | N.T.S. | 2

Not for permitting or construction

ARCHITECT PBK Architects, Inc.
PBK.com
SAN LUIS OBISPO
1327 Archer Street, Suite 110
San Luis Obispo, CA 93401
805-329-3076

FIRE STATION #44
COASTSIDE FIRE PROTECTION DISTRICT

501 STETSON STREET
MOSS BEACH, CA 94038

100% CD SET

BID SET

KEY PLAN
PLAN NORTH
TRUE NORTH

REGISTERED PROFESSIONAL ENGINEER
ROLANDO E. SOTTO
No. E17229
8/30/26
ELECTRICAL
STATE OF CALIFORNIA

CLIENT
COASTSIDE FIRE PROTECTION DISTRICT
PROJECT NUMBER
230137
DATE 2/14/2025
DRAWN BY: LS CHKED BY: RES

REVISIONS

#	DESCRIPTION	DATE
1	PLAN CHECK #1 RESPONSE	12/05/25
2	PLAN CHECK #2 RESPONSE	03/13/26
3	PLAN CHECK #3 RESPONSE	05/22/26
4	PLAN CHECK #4 RESPONSE	08/25/26

SITE PLAN

This document is for plan review only

E1.1

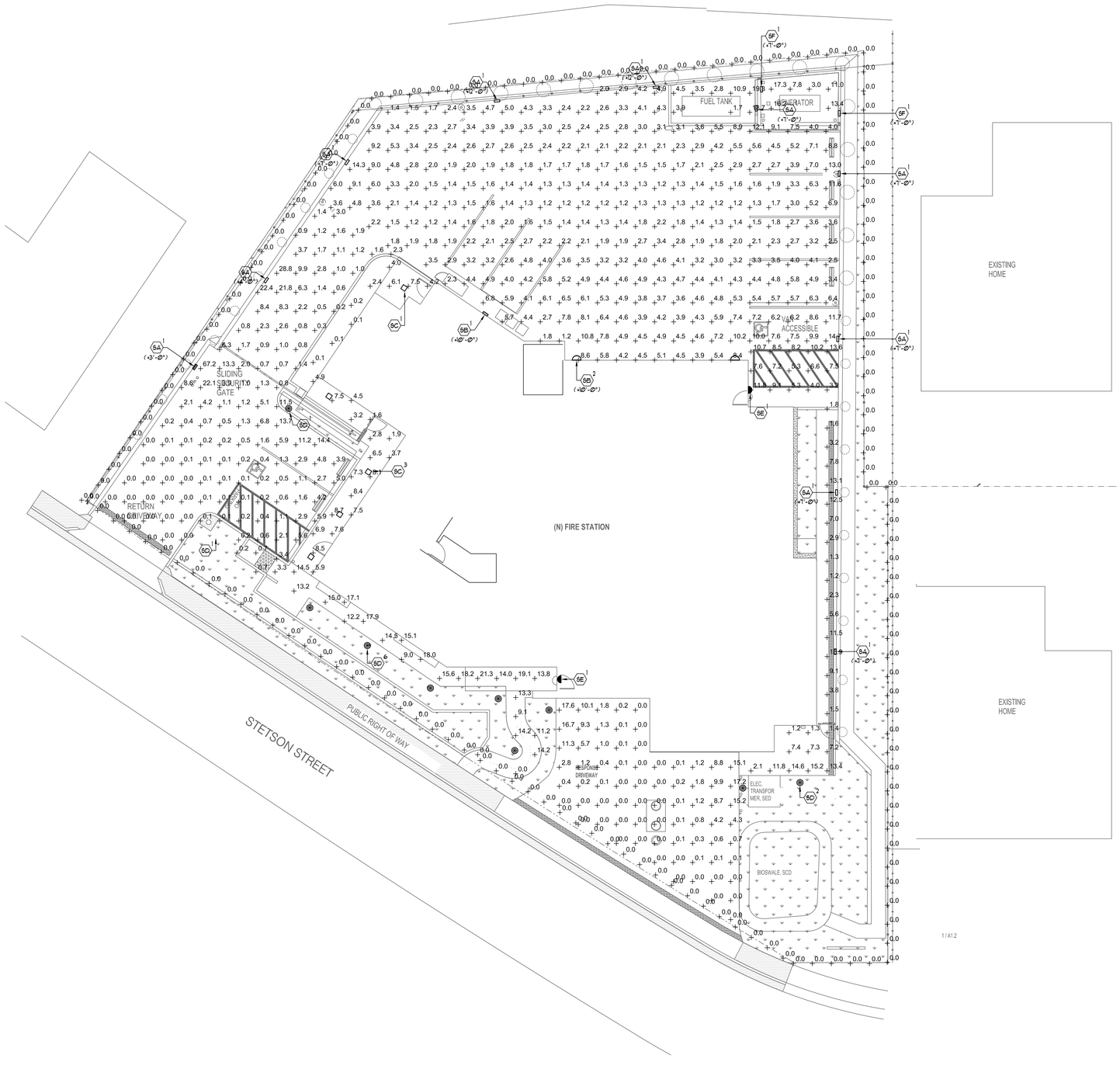

PLAN NOTES

1. THIS LIGHTING PATTERN REPRESENTS ILLUMINATION LEVELS CALCULATED FROM LABORATORY DATA TAKEN UNDER CONTROLLED CONDITIONS UTILIZING CURRENT INDUSTRY STANDARD LAMP RATINGS IN ACCORDANCE WITH ILLUMINATING ENGINEERING SOCIETY APPROVED METHODS. ACTUAL PERFORMANCE OF ANY MANUFACTURER'S LUMINARIE MAY VARY DUE TO VARIATION IN ELECTRICAL VOLTAGE, TOLERANCE IN LAMPS AND OTHER VARIABLE FIELD CONDITIONS.

Statistics

Description	Symbol	Avg	Max	Min	Max/Min	Avg/Min
Front Drive	+	2.3 fc	17.6 fc	0.0 fc	N/A	N/A
Property Line	+	0.0 fc	0.0 fc	0.0 fc	N/A	N/A
Front Walkway	+	13.5 fc	21.3 fc	0.0 fc	N/A	N/A
Generator Area	+	11.4 fc	17.3 fc	3.0 fc	5.8:1	3.8:1
Left Drive	+	3.3 fc	6.72 fc	0.0 fc	N/A	N/A
Left Walkway	+	4.9 fc	14.5 fc	0.1 fc	145.0:1	49.0:1
Right Walkway	+	7.0 fc	15.2 fc	1.2 fc	12.7:1	5.8:1
Back Drive	+	3.8 fc	19.3 fc	1.2 fc	16.1:1	3.2:1

SITE LIGHTING FIXTURE SCHEDULE

TYPE	MANUFACTUER/ MODEL	LAMP/ TEMP	WATTS/ VOLTAGE	MOUNTING HEIGHT
5A	LITHONIA LIGHTING #LPX1-LED-P2-30K-MVOLT-DBLXD	LED 3000K	24W	AS NOTED
5B	BEACON LIGHTING #TRP2-160L-50-3K8-4F-UNV-# - NXGB	LED 3000K	57W	+10'-0"
5C	GOTHAM LIGHTING #EVO6SQSH-30/15-DFF-SOL-120-EZ1-NLTER-BGTD	LED 3000K	15W	
5D	U.S. ARCHITECTURAL LIGHTING #TNA-LED-ASY-24LED-WW-120- # -DIM	LED 3000K	28W	
5E	LUMINAIRE LIGHTING #AEL36-MINI0-15W-30K-MVOLT-DP-#	LED 3000K	15W	MOUNTED ABOVE DOOR
5F	LITHONIA LIGHTING #LPX1-LED-P2-30K-MVOLT-E14WC -DBLXD	LED 3000K	24W	AS NOTED

A&F ENGINEERING GROUP, INC.
9320 BASELINE RD., SUITE C, RANCHO CUCAMONGA, CA 91701
TEL. (909) 941-3008 FAX (909) 941-8251

PHOTOMETRIC SITE PLAN | 1" = 10'-0" | 1

Not for permitting or construction

ARCHITECT PBK Architects, Inc.
PBK.com
SAN LUIS OBISPO
1327 Archer Street, Suite 110
San Luis Obispo, CA 93401
805-329-3076

FIRE STATION #44
COASTSIDE FIRE PROTECTION DISTRICT

501 STETSON STREET
MOSS BEACH, CA 94038
100% CD SET

BID SET

KEY PLAN
PLAN NORTH
TRUE NORTH

REGISTERED PROFESSIONAL ENGINEER
ROLANDO L. SOTELO
No. 017229
6/30/26
ELECTRICAL
STATE OF CALIFORNIA

CLIENT
COASTSIDE FIRE PROTECTION DISTRICT
PROJECT NUMBER
230137
DATE 2/14/2025
DRAWN BY: LS CHKED BY: RES

REVISIONS

#	DESCRIPTION	DATE
1	PLAN CHECK #1 RESPONSE	12/05/25
2	PLAN CHECK #2 RESPONSE	03/13/26
3	PLAN CHECK #3 RESPONSE	05/22/26
4	PLAN CHECK #4 RESPONSE	08/25/26

PHOTOMETRIC SITE PLAN

This document is for plan review only

E1.1P

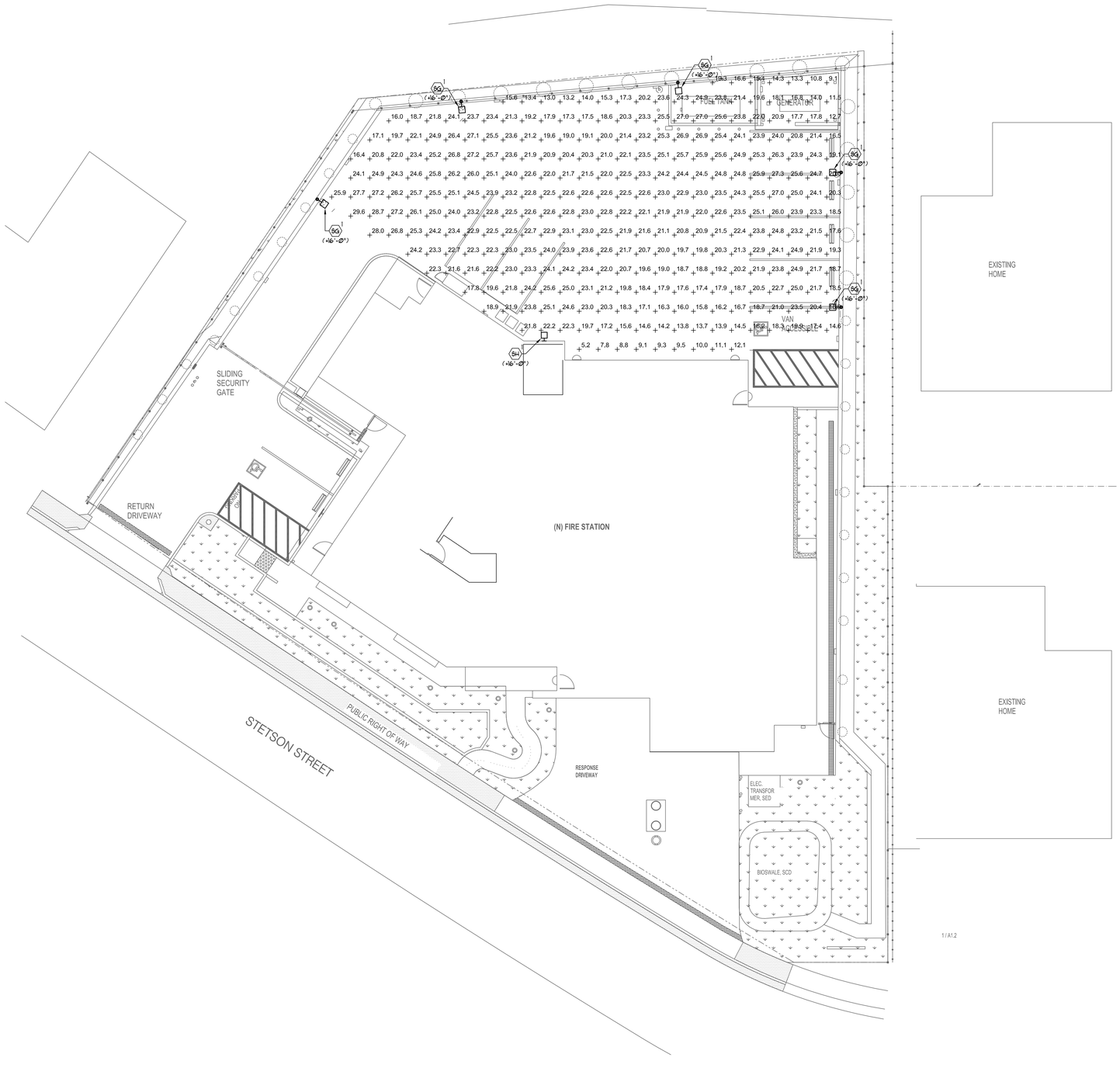

PLAN NOTES

1. THIS LIGHTING PATTERN REPRESENTS ILLUMINATION LEVELS CALCULATED FROM LABORATORY DATA TAKEN UNDER CONTROLLED CONDITIONS UTILIZING CURRENT INDUSTRY STANDARD LAMP RATINGS IN ACCORDANCE WITH ILLUMINATING ENGINEERING SOCIETY APPROVED METHODS. ACTUAL PERFORMANCE OF ANY MANUFACTURER'S LUMINARIE MAY VARY DUE TO VARIATION IN ELECTRICAL VOLTAGE, TOLERANCE IN LAMPS AND OTHER VARIABLE FIELD CONDITIONS.

Statistics						
Description	Symbol	Avg	Max	Min	Max/Min	Avg/Min
Back Drive	+	20.5 fc	25.4 fc	7.1 fc	3.6:1	2.9:1

SITE LIGHTING FIXTURE SCHEDULE

TYPE	MANUFACTUER/ MODEL	LAMP/ TEMP	WATTS/ VOLTAGE	MOUNTING HEIGHT
5G	LITHONIA LIGHTING *DSX2-LED-P1-40K-80CRI-TFTM-MVOLT-SPA-HS-DBLXD	LED 4000K	40W	+14'-0"
5H	LITHONIA LIGHTING *DSX2-LED-P1-40K-80CRI-TFTM-MVOLT-UBA-HS-DBLXD	LED 4000K	40W	+14'-0"

A&F ENGINEERING GROUP, INC.
9320 BAXBURNE RD., SUITE C, RANCHO CUCAMONGA, CA 91701
TEL: (909) 941-3008 FAX: (909) 941-8211

EMERGENCY PHOTOMETRIC SITE PLAN | 1" = 10'-0" | 1

Not for permitting or construction

PBK

ARCHITECT PBK Architects, Inc.
PBK.com
SAN LUIS OBISPO
1327 Archer Street, Suite 110
San Luis Obispo, CA 93401
805-329-3076

FIRE STATION #44
COASTSIDE FIRE PROTECTION DISTRICT

501 STETSON STREET
MOSS BEACH, CA 94038

100% CD SET

COASTSIDE FIRE PROTECTION DISTRICT EST. 2008

BID SET

KEY PLAN

PLAN NORTH | TRUE NORTH

REGISTERED PROFESSIONAL ENGINEER
ROLANDO E. SOTELO
No. E17229
8/30/26
ELECTRICAL
STATE OF CALIFORNIA

CLIENT
COASTSIDE FIRE PROTECTION DISTRICT

PROJECT NUMBER
230137

DATE 2/14/2025

DRAWN BY: LS CHKED BY: RES

REVISIONS

#	DESCRIPTION	DATE
1	PLAN CHECK #1 RESPONSE	12/05/25
2	PLAN CHECK #2 RESPONSE	03/13/26
3	PLAN CHECK #3 RESPONSE	05/22/26
4	PLAN CHECK #4 RESPONSE	08/25/26

EMERGENCY PHOTOMETRIC SITE PLAN

This document is for plan review only

E1.1EP

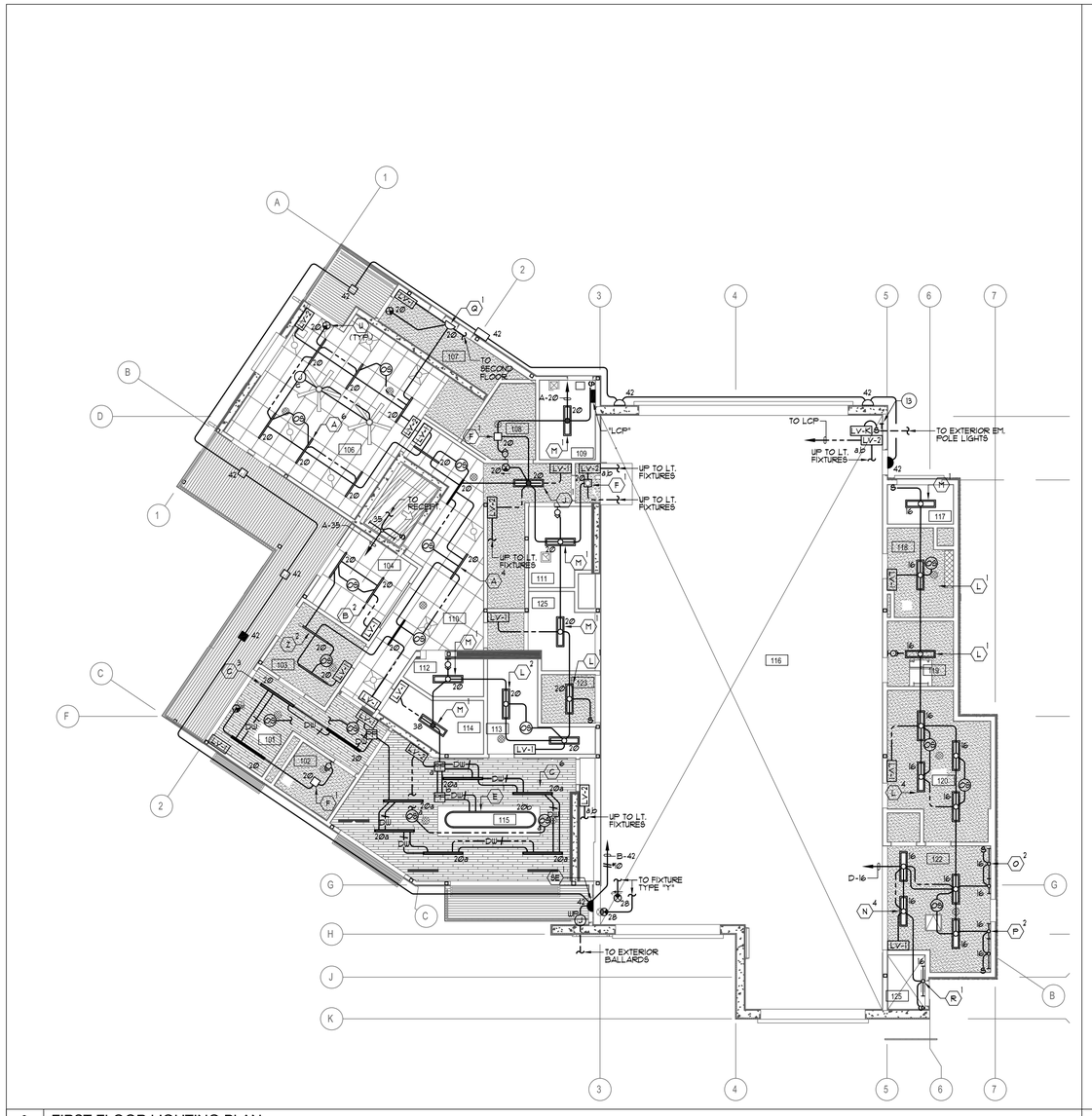

1 FIRST FLOOR LIGHTING PLAN
SCALE: 1/8" = 1'-0"

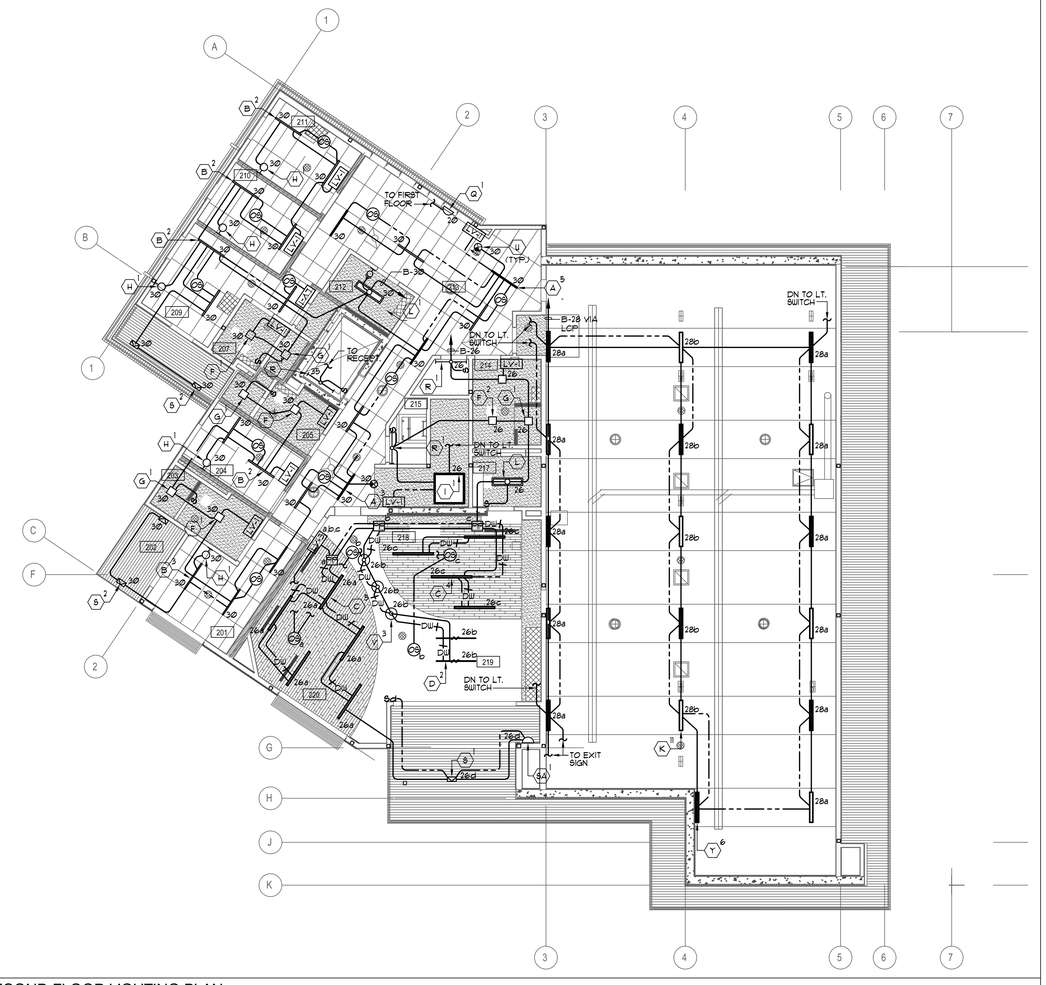

2 SECOND FLOOR LIGHTING PLAN
SCALE: 1/8" = 1'-0"

PLAN NOTES:

1. REFER TO GENERAL NOTES, DRAWING E0.1, FOR ADDITIONAL REQUIREMENTS.
2. REFER TO LIGHTING FIXTURE SCHEDULE, DRAWING E0.6, FOR TYPE OF FIXTURE TO BE PROVIDED AND INSTALLED.
3. THE CONTRACTOR SHALL BE RESPONSIBLE FOR COORDINATING ALL CEILING MOUNTED FIXTURES AND DEVICES WITH THE ARCHITECTURAL REFLECTED CEILING PLAN.
4. OCCUPANT SENSOR LOCATIONS INDICATED ON PLAN SHALL BE ADJUSTED/MOVED AS REQUIRED TO PROVIDE FULL COVERAGE OF THE AREA INDICATED ON PLAN. PLACEMENT OF SENSORS SHALL CONFORM WITH THE SENSOR MANUFACTURER'S RECOMMENDATION.
5. NO EXPOSED CONDUIT WILL BE ALLOWED.
6. LIGHTING CONTROLS ARE BASED ON ACUITY NLIGHT SYSTEM. ANY PROPOSED ALTERNATE SYSTEM WILL REQUIRE THE CONTRACTOR TO UPDATE/CHANGE THE PLAN TO REFLECT THE PROPOSED ALTERNATE SYSTEM. THE REVISED DRAWING SHALL BE ISSUED AS PART OF THE LIGHTING CONTROLS SUBMITTAL.
7. REFER TO WIRING CONTROL DIAGRAM ON SHEET E3.5 FOR WIRING REQUIREMENTS.
8. ALL SENSORS IN HALLWAYS/CORRIDORS SHALL BE PROGRAMMED TO REDUCE BY 50% WHEN NO MOVEMENT IS DETECTED.
9. CONTRACTOR TO MEET AND COORDINATE WITH THE TITLE 24 ACCEPTANCE TESTER PRIOR TO THE BEGINNING OF THE PROJECT TO VERIFY ALL TITLE 24 ACCEPTANCE TEST REQUIREMENTS AND DOCUMENTS TO BE COMPLETED. CONTRACTOR SHALL PROVIDE, COMPLETE AND SUBMIT ALL REQUIRED TITLE 24 ACCEPTANCE TEST DOCUMENTS AS REQUIRED BY THE T24 ACCEPTANCE TESTER.
10. THE CONTRACTOR SHALL NOTE THAT THE DRAWING IS DIAGRAMMATIC. EXACT ROUTING OF NEW CONDUITS AND LOCATION OF JUNCTION BOXES AND PULL BOXES SHALL BE COORDINATED AND DETERMINED IN THE FIELD. NEW CONDUIT, JUNCTION BOXES AND PULL BOXES SHALL BE ROUTED / PLACED IN SUCH A MANNER AS TO ADHERE TO ALL APPLICABLE CODES AND TO AVOID INTERFERENCE WITH EXISTING UTILITIES AND THE WORK BEING PERFORMED BY OTHER TRADES. ALL BUILDING STRUCTURES, EXTERIOR CONDUIT, FITTINGS, JUNCTION BOXES AND PULL BOXES TO BE WEATHER PROOF TYPE, NEMA 3R.
11. CONTRACTOR TO PROVIDE ENGRAVED LABELING AT EACH RECEPTACLE, DATA OUTLET, JUNCTION BOX, DISCONNECT SWITCH, ECT. DISPLAYING THE IDF OR PANEL (WITH CIRCUIT) FEEDING THE DATA OUTLET, RECEPTACLE, JUNCTION BOX, DISCONNECT SWITCH, ECT.
12. LIGHT FIXTURE SHALL BE INSTALLED IN THE ELEVATOR PIT PER ELEVATOR CODE REQUIREMENTS.
13. 24 HOUR DIGITAL SWITCH TIMER.

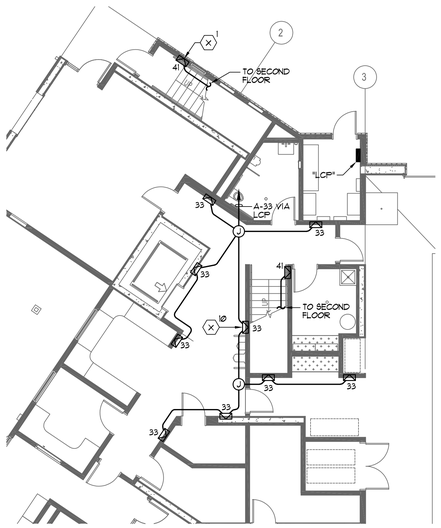

3 FIRST FLOOR GROUND LIGHTING PLAN
SCALE: 1/8" = 1'-0"

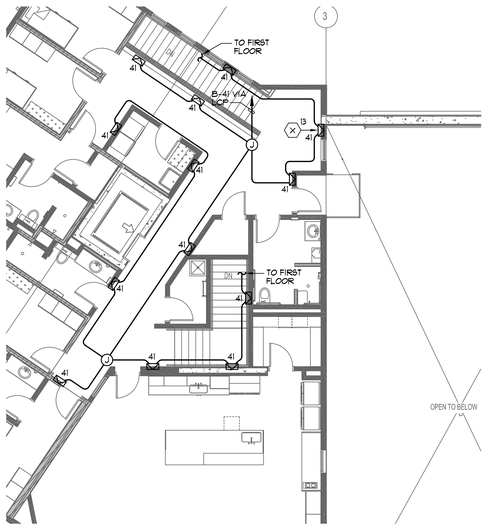

4 SECOND FLOOR GROUND LIGHTING PLAN
SCALE: 1/8" = 1'-0"

A&F ENGINEERING GROUP, INC.
9320 BASELINE RD., SUITE C, RANCHO CUCAMONGA, CA 91701
TEL: (909) 941-3008 FAX: (909) 941-8211

ROOM #	ROOM NAME	ROOM #	ROOM NAME
101	LOBBY	201	BAT. CHIEF
102	RR 1	202	BALCONY
103	CAPT. OFFICE	203	BC RR
104	OFFICE	204	DORM 1
105	ELEV	205	RR
106	FITNESS	206	ELEV
107	STAIRWAY 1	207	RR 3
108	RR	208	BALCONY
109	ELECT.	209	CAPTAIN
110	HALLWAY	210	DORM 2
111	CUST.	211	DORM 3
112	EL MACH.	212	LAUNDRY
113	STOR	213	HALLWAY
114	TELECOM	214	ACCESSIBLE RR
115	TRAINING CLASSROOM	215	VEST
116	APPARATUS BAY	216	STOR 3
117	YARD ST	217	PANTRY
118	DECON	218	KITCHEN
119	EMS STOR.	219	DINING
120	TURNOUT	220	DAYROOM
121	COMP	221	DECK
122	SHOP	222	SLIDE POLE DECK
123	HOSE DRY STOR		
124	FR		
125	VESTIBULE		
126	STAIRWAY 2		

ROOM LEGEND

Not for permitting or construction

PBK
ARCHITECT PBK Architects, Inc.
PBK.com
SAN LUIS OBISPO
1327 Archer Street, Suite 110
San Luis Obispo, CA 93401
805-329-3076

FIRE STATION #44
COASTSIDE FIRE PROTECTION DISTRICT

501 STETSON STREET
MOSS BEACH, CA 94038

100% CD SET

COASTSIDE FIRE PROTECTION DISTRICT

BID SET

KEY PLAN

PLAN NORTH TRUE NORTH

REGISTERED PROFESSIONAL ENGINEER
RICHARD L. STEED
No. E17229
6/30/26
STATE OF CALIFORNIA

CLIENT
COASTSIDE FIRE PROTECTION DISTRICT
PROJECT NUMBER
230137

DATE	2/14/2025
DRAWN BY: LS	CHKED BY: RES

REVISIONS

#	DESCRIPTION	DATE
1	PLAN CHECK #1 RESPONSE	12/05/25
2	PLAN CHECK #2 RESPONSE	03/13/26
3	PLAN CHECK #3 RESPONSE	05/22/26
4	PLAN CHECK #4 RESPONSE	08/25/26

This document is for plan review only

LIGHTING PLANS

E2.1

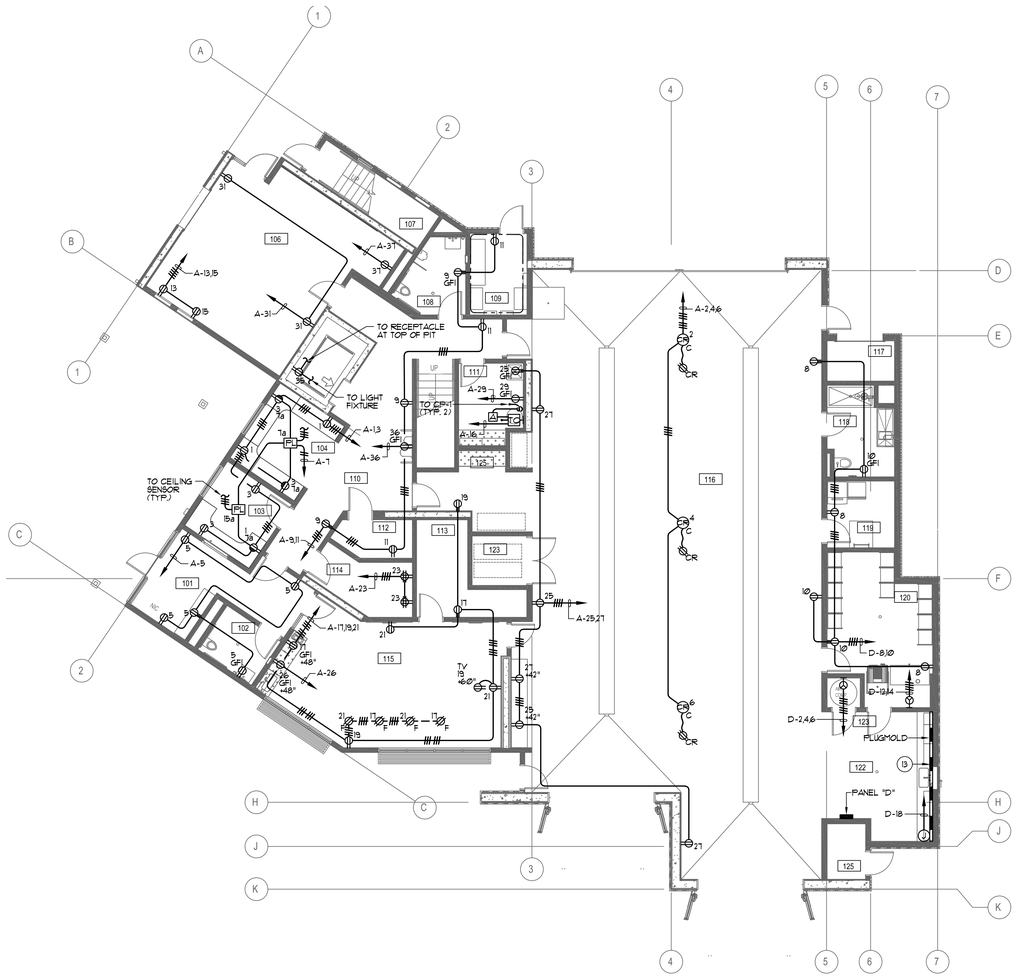

1 FIRST FLOOR POWER PLAN
SCALE: 1/8" = 1'-0"

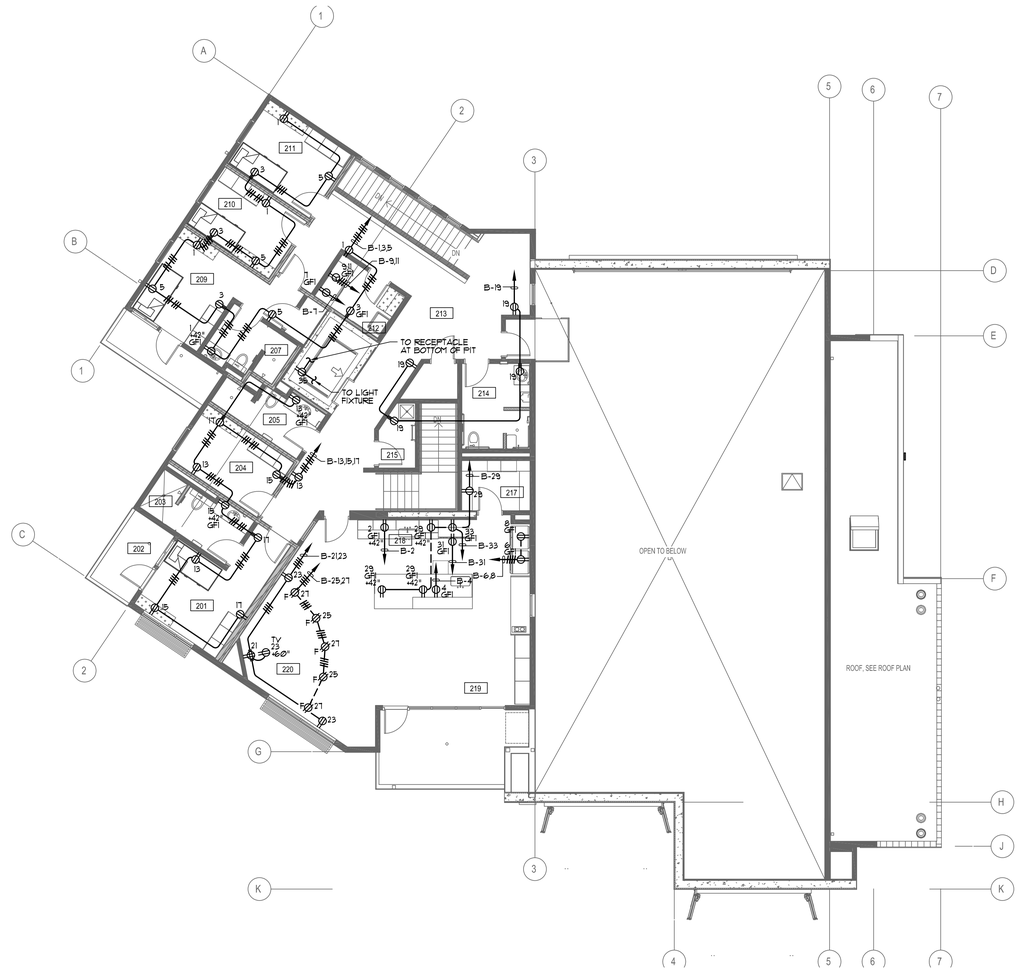

2 SECOND FLOOR POWER PLAN
SCALE: 1/8" = 1'-0"

A&F ENGINEERING GROUP, INC.
9320 BASELINE RD., SUITE C, RANCHO CUCAMONGA, CA 91701
TEL. (909) 941-3008 FAX (909) 941-8231

PLAN NOTES:

1. REFER TO GENERAL NOTES, DRAWING E0.1, FOR ADDITIONAL REQUIREMENTS.
2. SEE SINGLE LINE DIAGRAM, DRAWING E0.2 FOR CONDUIT SIZE AND WIRE SIZE AND QUANTITIES REQUIRED FOR ALL ELECTRICAL EQUIPMENT.
3. CONDUIT AND WIRE INDICATED ON THE SINGLE LINE DIAGRAM, WHETHER SHOWN ON THIS DRAWING OR NOT, SHALL BE A PART OF THIS CONTRACT AND THE RESPONSIBILITY OF THIS CONTRACTOR TO PROVIDE REQUIRED ROUTING TO MEET THE INTENT OF THESE PLANS AND SPECIFICATIONS.
4. EXACT LOCATION OF OUTLETS SHOWN ON THESE DRAWINGS SHALL BE COORDINATED WITH THE ARCHITECTURAL ELEVATIONS PRIOR TO ROUGH-IN AND SHALL BE LOCATED IN SUCH A MANNER TO AVOID INTERFERENCES WITH OTHER OUTLETS AND CASEWORK.
5. EXTERIOR MOUNTED DEVICES / RECEPTACLES SHALL BE PROVIDED COMPLETE WITH LOCKING TYPE WEATHERPROOF COVERS AND BE UL LISTED FOR WET LOCATIONS WHEN IN USE. COVERS SHALL BE AS MANUFACTURED BY RACO OR APPROVED EQUAL. PLASTIC COVERS NOT ALLOWED.
5. NO OUTLET BEHIND PERMANENTLY INSTALLED CASEWORK WHERE OUTLETS ARE SPECIFICALLY NOTED TO BE INSTALLED IN CABINETS THE OUTLETS SHALL BE FLUSH WITH THE INSTALLED SURFACE OF THE CABINET.
6. NO EXPOSED CONDUIT WILL BE ALLOWED.
7. CONTRACTOR TO PROVIDE LEVITON #T5832-W TYPE RECEPTACLE (20A-125V). CONTRACTOR TO COORDINATE WITH THE ARCHITECT FOR EXACT COLOR TO BE PROVIDED PRIOR TO PURCHASE.
8. RECEPTACLE SHALL BE INSTALLED AT THE TOP OF THE SHAFT PER ELEVATOR CODE REQUIREMENTS.
9. CONTRACTOR TO COORDINATE WITH THE CASEWORK MANUFACTURE AND THE ARCHITECT TO AVOID COVERING UP THE RECEPTACLES FOR THE A/V CABINET. COORDINATION TO BE PERFORMED PRIOR TO ROUGH-IN.
10. CONTRACTOR TO PROVIDE ENGRAVED LABELING AT EACH RECEPTACLE, DATA OUTLET, JUNCTION BOX, DISCONNECT SWITCH, ECT. DISPLAYING THE IDF OR PANEL (WITH CIRCUIT) FEEDING THE DATA OUTLET, RECEPTACLE, JUNCTION BOX, DISCONNECT SWITCH, ECT.
11. GENERATOR ALARM PANEL "GAP" TO BE RECESSED MOUNTED.
12. ALL ELECTRICAL PANELS, LIGHTING PANELS, RELAY PANELS, ETC. TO BE RECESSED MOUNTED.
13. ALL RECEPTACLES ON PLUG MOLD TO BE GFCI PROTECTED.

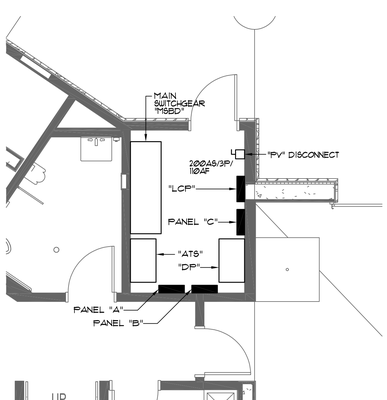

3 ELECTRICAL ROOM - 109
SCALE: 1/4" = 1'-0"

ROOM #	ROOM NAME	ROOM #	ROOM NAME
101	LOBBY	201	BAT. CHIEF
102	RR 1	202	BALCONY
103	CAPT. OFFICE	203	BC RR
104	OFFICE	204	DORM 1
105	ELEV	205	RR
106	FITNESS	206	ELEV
107	STAIRWAY 1	207	RR 3
108	RR	208	BALCONY
109	ELECT.	209	CAPTAIN
110	HALLWAY	210	DORM 2
111	CUST.	211	DORM 3
112	EL MACH.	212	LAUNDRY
113	STOR	213	HALLWAY
114	TELECOM	214	ACCESSIBLE RR
115	TRAINING CLASSROOM	215	VEST
116	APPARATUS BAY	216	STOR 3
117	YARD ST	217	PANTRY
118	DECON	218	KITCHEN
119	EMS STOR.	219	DINING
120	TURNOUT	220	DAYROOM
121	COMP	221	DECK
122	SHOP	222	SLIDE POLE DECK
123	HOSE DRY STOR		
124	FR		
125	VESTIBULE		
126	STAIRWAY 2		

ROOM LEGEND

Not for permitting or construction

PBK
ARCHITECT PBK Architects, Inc.
PBK.com
SAN LUIS OBISPO
1327 Archer Street, Suite 110
San Luis Obispo, CA 93401
805-329-3076

FIRE STATION #44
COASTSIDE FIRE PROTECTION DISTRICT

501 STETSON STREET
MOSS BEACH, CA 94038

100% CD SET

COASTSIDE FIRE PROTECTION DISTRICT EST. 2009

BID SET

KEY PLAN

PLAN NORTH TRUE NORTH

REGISTERED PROFESSIONAL ENGINEER
ROLAND L. SYFFOLD
No. E17229
8/30/25
STATE OF CALIFORNIA

CLIENT
COASTSIDE FIRE PROTECTION DISTRICT
PROJECT NUMBER
230137
DATE 2/14/2025
DRAWN BY: LS CHKED BY: RES

REVISIONS

#	DESCRIPTION	DATE
1	PLAN CHECK #1 RESPONSE	12/03/25
2	PLAN CHECK #2 RESPONSE	03/13/26
3	PLAN CHECK #3 RESPONSE	05/22/26
4	PLAN CHECK #4 RESPONSE	08/25/26

POWER PLANS

This document is for plan review only

E2.2

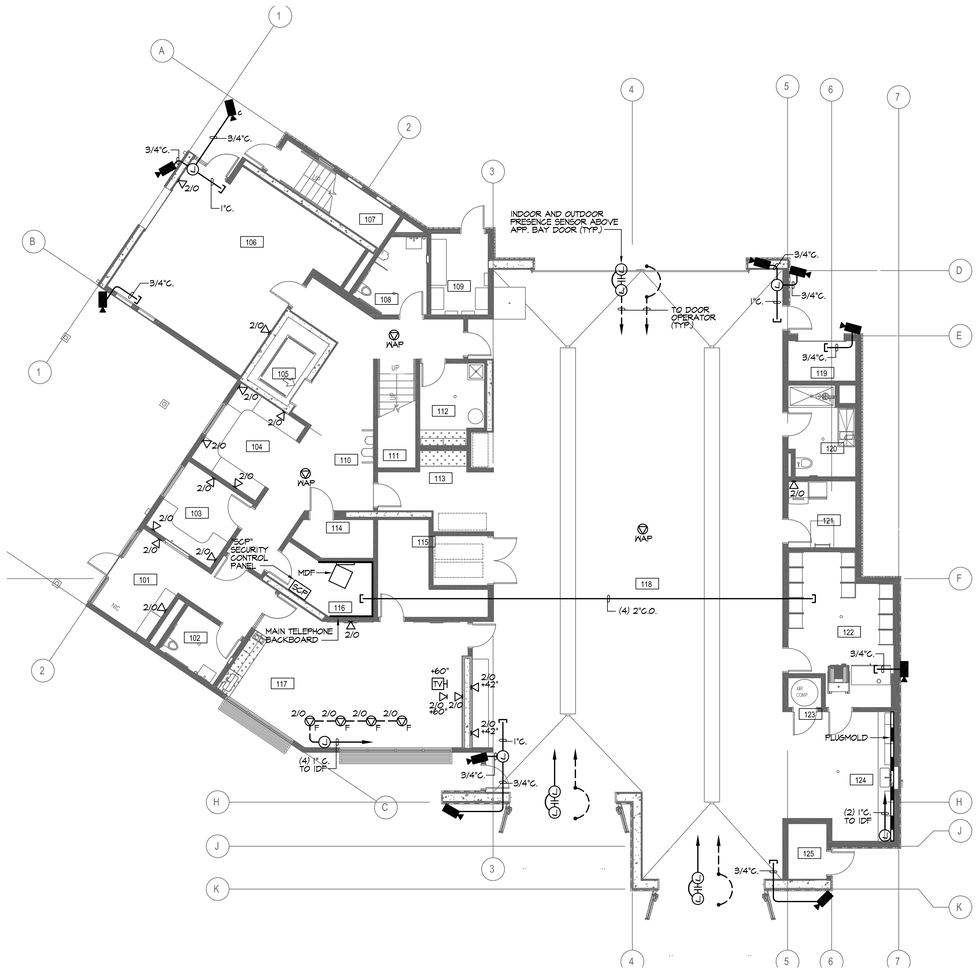

1 FIRST FLOOR SIGNAL PLAN

SCALE: 1/8" = 1'-0"

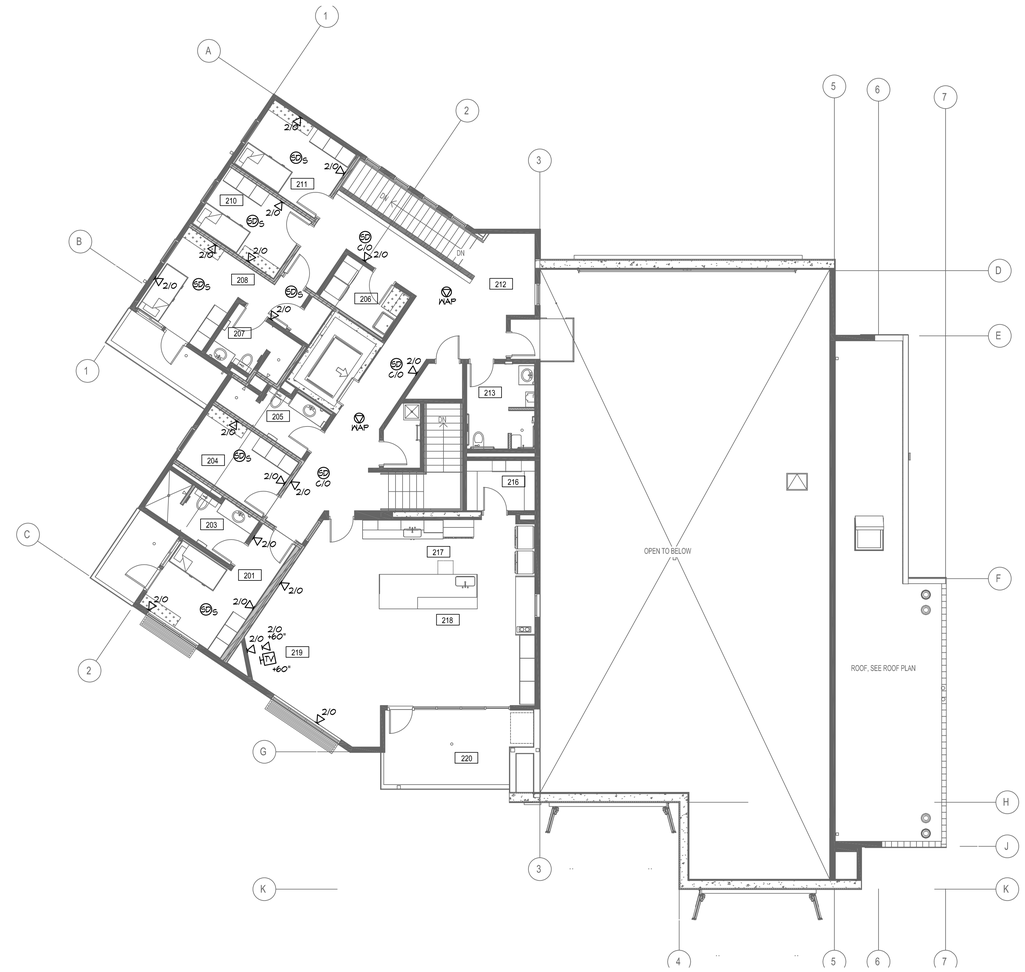

2 SECOND FLOOR SIGNAL PLAN

SCALE: 1/8" = 1'-0"

A&F ENGINEERING GROUP, INC.
9320 BASELINE RD., SUITE C, RANCHO CUCAMONGA, CA 91701
TEL: (909) 941-3008 FAX: (909) 941-8231

PLAN NOTES:

1. REFER TO GENERAL NOTES, DRAWING E0.1, FOR ADDITIONAL REQUIREMENTS.
2. EXACT LOCATION OF OUTLETS SHOWN ON THESE DRAWINGS SHALL BE COORDINATED WITH THE ARCHITECTURAL PLANS PRIOR TO PULLING OF CABLES / CONDUCTORS.
3. EXTERIOR MOUNTED DEVICES SHALL BE PROVIDED COMPLETE WITH WEATHERPROOF BACKBOXES AND/OR COVERS. COVERS SHALL BE AS RECOMMENDED BY THE SYSTEM'S MANUFACTURER.
4. KNOX BOX. CONNECT TO FIRE ALARM CONTROL PANEL. SEE ARCHITECTURAL DRAWINGS FOR EXACT LOCATION.
5. WHERE LOW VOLTAGE WIRING IS REQUIRED IN INACCESSIBLE CEILING SPACES, THE CONTRACTOR SHALL PROVIDE A COMPLETE CONDUIT SYSTEM FOR ROUTING OF THE SUBJECT WIRE/CABLE.
6. FIRE ALARM DEVICES SHOWN ON PLAN ARE FOR REFERENCE ONLY; CONTRACTOR TO PROVIDE PATHWAYS FOR FIRE ALARM DEVICES SHOWN ON PLAN. FIRE ALARM SYSTEM IS A DEFERRED APPROVAL. A COMPLETE FIRE ALARM SYSTEM DESIGN SHALL BE SUBMITTED AND REVIEWED BY THE LIFE SAFETY SERVICES, FIRE PREVENTION DEPARTMENT.
7. HEAT DETECTOR IN THE ELEVATOR MACHINE ROOM AND PIT SHALL BE PROGRAMMED TO AUTOMATICALLY SHUT-OFF POWER TO THE ELEVATOR UPON ACTIVATION OF THE HEAT DETECTOR.
8. CONTRACTOR TO PROVIDE ENGRAVED LABELING AT EACH RECEPTACLE, DATA OUTLET, JUNCTION BOX, DISCONNECT SWITCH, ECT. DISPLAYING THE IDF OR PANEL (WITH CIRCUIT) FEEDING THE DATA OUTLET, RECEPTACLE, JUNCTION BOX, DISCONNECT SWITCH, ECT.

ROOM #	ROOM NAME	ROOM #	ROOM NAME
101	LOBBY	201	BAT. CHIEF
102	RR 1	202	BALCONY
103	CAPT. OFFICE	203	BC RR
104	OFFICE	204	DORM 1
105	ELEV	205	RR
106	FITNESS	206	ELEV
107	STAIRWAY 1	207	RR 3
108	RR	208	BALCONY
109	ELECT.	209	CAPTAIN
110	HALLWAY	210	DORM 2
111	CUST.	211	DORM 3
112	EL MACH.	212	LAUNDRY
113	STOR	213	HALLWAY
114	TELECOM	214	ACCESSIBLE RR
115	TRAINING CLASSROOM	215	VEST
116	APPARATUS BAY	216	STOR 3
117	YARD ST	217	PANTRY
118	DECON	218	KITCHEN
119	EMS STOR.	219	DINING
120	TURNOUT	220	DAYROOM
121	COMP	221	DECK
122	SHOP	222	SLIDE POLE DECK
123	HOSE DRY STOR		
124	FR		
125	VESTIBULE		
126	STAIRWAY 2		

ROOM LEGEND

Not for permitting or construction

PBK

ARCHITECT PBK Architects, Inc.
PBK.com
SAN LUIS OBISPO
1327 Archer Street, Suite 110
San Luis Obispo, CA 93401
805-329-3076

FIRE STATION #44
COASTSIDE FIRE PROTECTION DISTRICT

501 STETSON STREET
MOSS BEACH, CA 94038

100% CD SET

COASTSIDE FIRE PROTECTION DISTRICT EST. 2009

BID SET

KEY PLAN

PLAN NORTH TRUE NORTH

REGISTERED PROFESSIONAL ENGINEER
RICARDO E. SOTELO
No. E17229
8/30/25
STATE OF CALIFORNIA

CLIENT
COASTSIDE FIRE PROTECTION DISTRICT

PROJECT NUMBER
230137

DATE 2/14/2025

DRAWN BY: LS CHKED BY: RES

REVISIONS

#	DESCRIPTION	DATE
1	PLAN CHECK #1 RESPONSE	12/03/25
2	PLAN CHECK #2 RESPONSE	03/13/26
3	PLAN CHECK #3 RESPONSE	05/22/26
4	PLAN CHECK #4 RESPONSE	08/25/26

SIGNAL PLANS

This document is for plan review only

E2.3

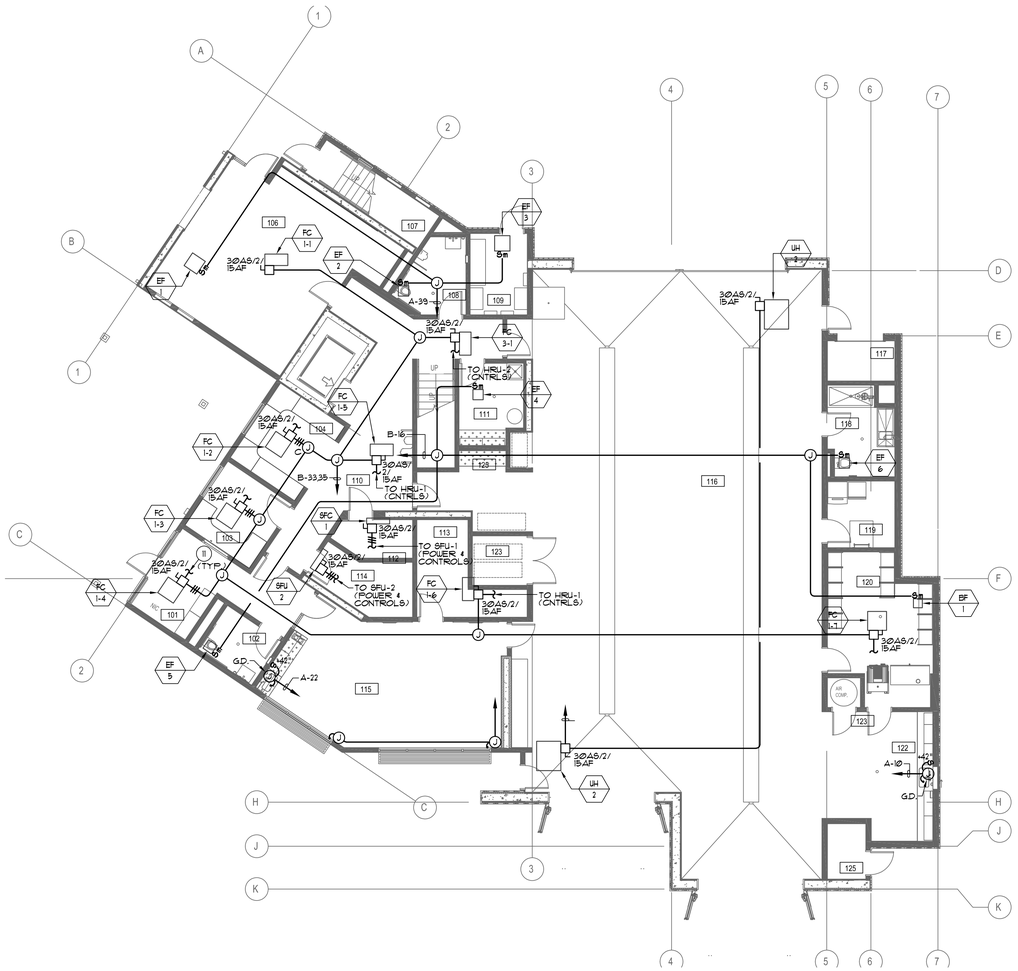

1 FIRST FLOOR MECHANICAL POWER PLAN

SCALE: 1/8" = 1'-0"

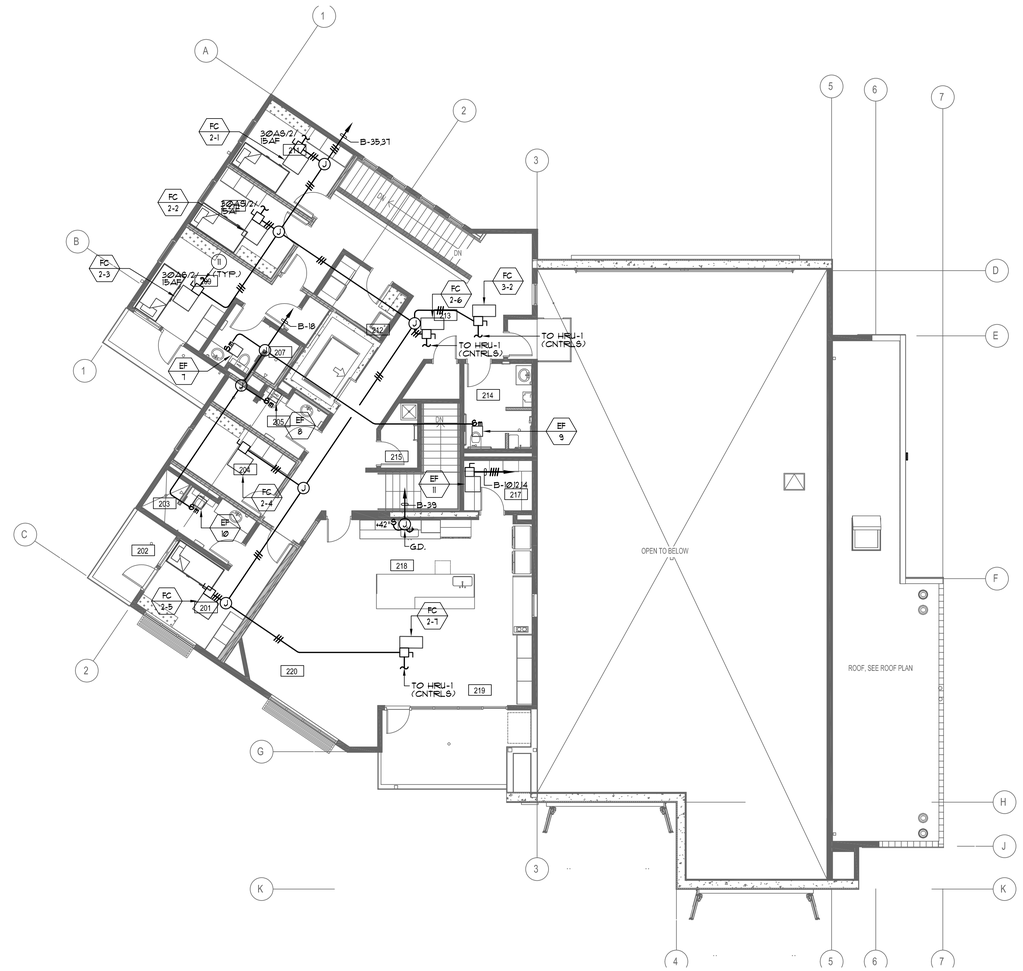

2 SECOND FLOOR MECHANICAL POWER PLAN

SCALE: 1/8" = 1'-0"

A&F ENGINEERING GROUP, INC.
9320 BASELINE RD., SUITE C, RANCHO CUCAMONGA, CA 91701
TEL. (909) 941-3008 FAX (909) 941-8231

PLAN NOTES:

1. REFER TO GENERAL NOTES, DRAWING E0.1, FOR ADDITIONAL REQUIREMENTS.
2. THE CONTRACTOR SHALL BE RESPONSIBLE FOR COORDINATING ALL CEILING MOUNTED DEVICES WITH THE ARCHITECTURAL REFLECTED CEILING PLAN.
3. THE CONTRACTOR SHALL NOTE THAT THE DRAWING IS DIAGRAMMATIC. EXACT ROUTING OF NEW CONDUITS AND LOCATION OF JUNCTION BOXES, SAFETY SWITCHES, DISCONNECT SWITCHES, PULL BOXES, ECT. SHALL BE COORDINATED AND DETERMINED IN THE FIELD. NEW CONDUIT, JUNCTION BOXES, SAFETY SWITCHES, DISCONNECT SWITCHES, PULL BOXES, ECT. SHALL BE ROUTED / PLACED IN SUCH A MANNER AS TO ADHERE TO ALL APPLICABLE CODES AND TO AVOID INTERFERENCE WITH EXISTING BUILDING STRUCTURES, UTILITIES AND THE WORK BEING PERFORMED BY OTHER TRADES. ALL EXTERIOR CONDUIT, FITTINGS, JUNCTION BOXES AND PULL BOXES TO BE WEATHER PROOF TYPE: NEMA 3R.
4. CONTRACTOR TO COORDINATE FINAL POWER LOCATIONS FOR ALL EQUIPMENT IN THE FIELD WITH THE ARCHITECT / CLIENT PRIOR TO START OF WORK.
5. CONTRACTOR TO PROVIDE ENGRAVED LABELING AT EACH RECEPTACLE, DATA OUTLET, JUNCTION BOX, DISCONNECT SWITCH, ECT. DISPLAYING THE IDF OR PANEL (WITH CIRCUIT) FEEDING THE DATA OUTLET, RECEPTACLE, JUNCTION BOX, DISCONNECT SWITCH, ECT.
6. CONDUIT AND WIRE INDICATED ON THE SINGLE LINE DIAGRAM, WHETHER SHOWN ON THIS DRAWING OR NOT, SHALL BE A PART OF THIS CONTRACT AND THE RESPONSIBILITY OF THIS CONTRACTOR TO PROVIDE REQUIRED ROUTING TO MEET THE INTENT OF THESE PLANS AND SPECIFICATIONS.
7. THE CONTRACTOR SHALL REFER TO THE MECHANICAL AND PLUMBING DRAWINGS FOR EXACT EQUIPMENT LOCATIONS AND ELECTRICAL CONNECTIONS REQUIREMENTS. CONTRACTOR SHALL PROVIDE ALL POWER AND CONTROL CONNECTIONS AS INDICATED ON THE MECHANICAL AND PLUMBING DRAWINGS.
8. CONTRACTOR SHALL ROUTE ELECTRICAL CONDUITS IN THE SAME ROUTE AS REFRIGERATION PIPING. CONTRACTOR TO COORDINATE WITH THE MECHANICAL AND PLUMBING DRAWINGS PRIOR TO START OF WORK TO DETERMINE EXACT ROUTE.
9. SEE SINGLE LINE DIAGRAM FOR CONDUIT SIZE, WIRE SIZE AND QUANTITIES REQUIRED FOR ALL ELECTRICAL EQUIPMENT.
10. WHERE "OPEN WIRING" IS INSTALLED IN INACCESSIBLE CEILING SPACES THE CONTRACTOR SHALL PROVIDE A COMPLETE CONDUIT SYSTEM FOR ROUTING OF THE SUBJECT WIRE/CABLE.
11. TO HRU-1 (CONTROLS). TYPICAL FC1-2 THRU FC1-4

ROOM #	ROOM NAME	ROOM #	ROOM NAME
101	LOBBY	201	BAT. CHIEF
102	RR 1	202	BALCONY
103	CAPT. OFFICE	203	BC RR
104	OFFICE	204	DORM 1
105	ELEV	205	RR
106	FITNESS	206	ELEV
107	STAIRWAY 1	207	RR 3
108	RR	208	BALCONY
109	ELECT.	209	CAPTAIN
110	HALLWAY	210	DORM 2
111	CUST.	211	DORM 3
112	EL MACH.	212	LAUNDRY
113	STOR	213	HALLWAY
114	TELECOM	214	ACCESSIBLE RR
115	TRAINING CLASSROOM	215	VEST
116	APPARATUS BAY	216	STOR 3
117	YARD ST	217	PANTRY
118	DECON	218	KITCHEN
119	EMS STOR.	219	DINING
120	TURNOUT	220	DAYROOM
121	COMP	221	DECK
122	SHOP	222	SLIDE POLE DECK
123	HOSE DRY STOR		
124	FR		
125	VESTIBULE		
126	STAIRWAY 2		

ROOM LEGEND

Not for permitting or construction

ARCHITECT PBK Architects, Inc.
PBK.com
SAN LUIS OBISPO
1327 Archer Street, Suite 110
San Luis Obispo, CA 93401
805-329-3076

FIRE STATION #44
COASTSIDE FIRE PROTECTION DISTRICT

501 STETSON STREET
MOSS BEACH, CA 94038

100% CD SET

BID SET

KEY PLAN

PLAN NORTH

TRUE NORTH

REGISTERED PROFESSIONAL ENGINEER
ROLAND L. SYFFOLD
No. E17229
8/30/25
STATE OF CALIFORNIA

CLIENT
COASTSIDE FIRE PROTECTION DISTRICT

PROJECT NUMBER
230137

DATE 2/14/2025

DRAWN BY: LS CHKED BY: RES

REVISIONS

#	DESCRIPTION	DATE
1	PLAN CHECK #1 RESPONSE	12/03/25
2	PLAN CHECK #2 RESPONSE	03/13/26
3	PLAN CHECK #3 RESPONSE	05/22/26
4	PLAN CHECK #4 RESPONSE	08/25/26

MECHANICAL POWER PLANS

This document is for plan review only

E2.4

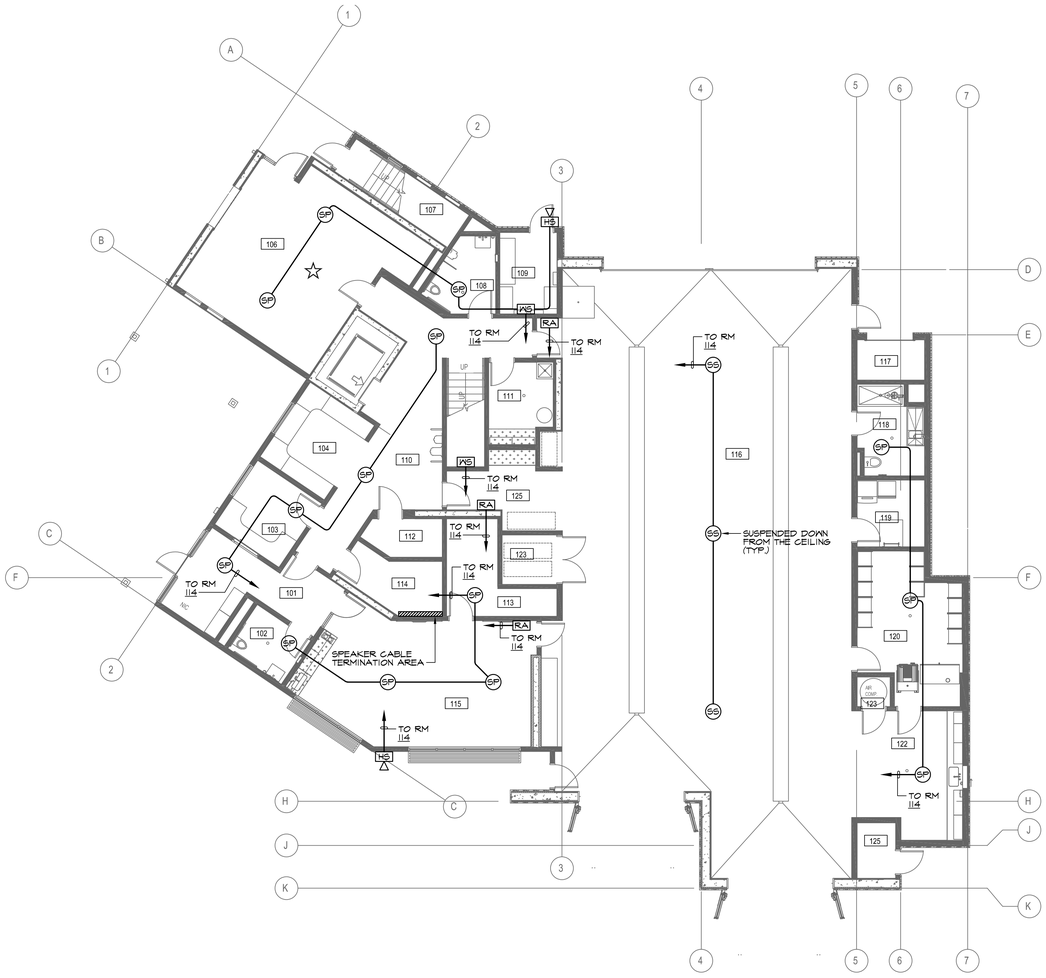

1 FIRST FLOOR POWER PLAN
SCALE: 1/8" = 1'-0"

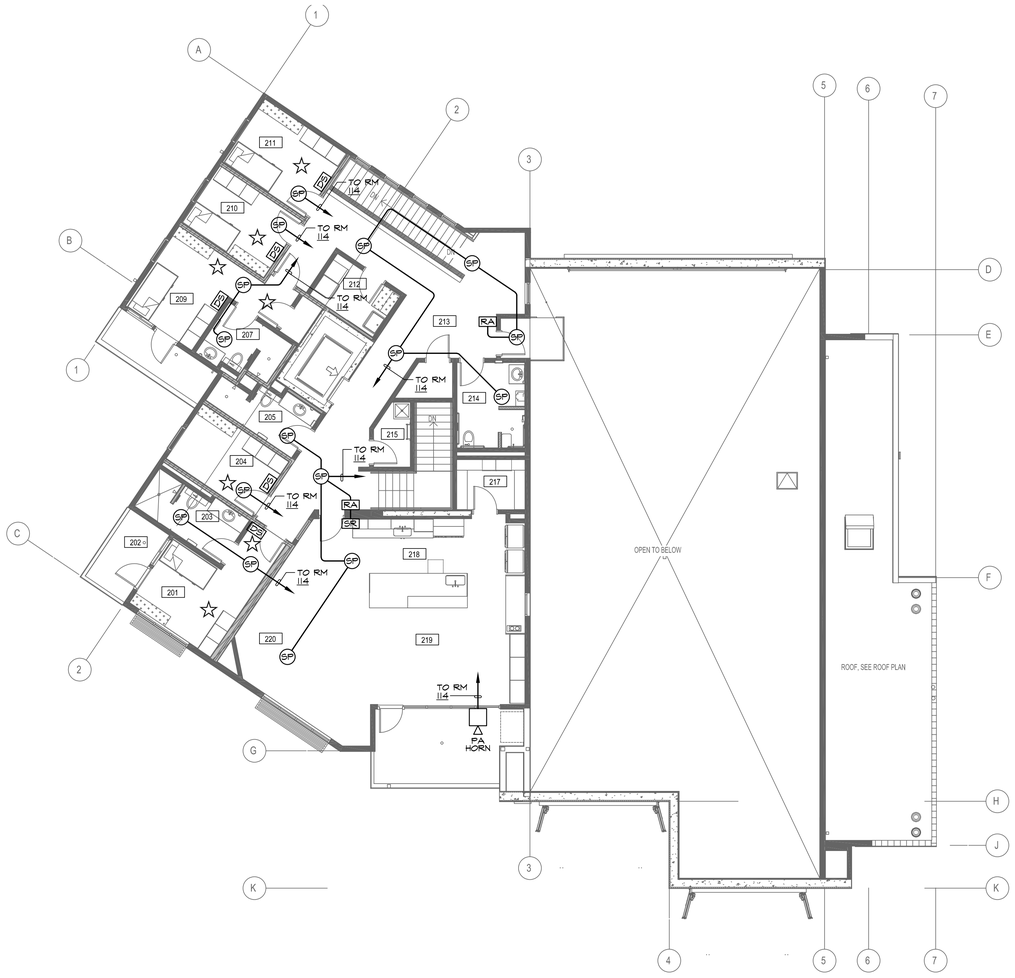

2 SECOND FLOOR POWER PLAN
SCALE: 1/8" = 1'-0"

A&F ENGINEERING GROUP, INC.
9320 BASELINE RD., SUITE C, RANCHO CUCAMONGA, CA 91701
TEL: (909) 941-3008 FAX (909) 941-8211

SP = Valcom V1220 Dual Channel Speaker in Ceiling
WS = Valcom V1220 Dual Channel Speaker in Wall
HS = Valcom V1036 Wall Mount Outdoor Horn Speaker
SS = Soundsphere Suspended Speaker (TEA Modified)
DS = Dorm Personality Selector Switch 3 position
RA = Remote Acknowledge button panel
SR = Stove Reset
☆ = DAL - Dorm Alerting Light

ALERTING SYSTEM: PROVIDE (1) 1-1/2" CONDUIT ROUTED FROM ROOM 114 TO ROOF FOR ALERTING ANTENNA. EXTEND CONDUIT 4'-0" ABOVE ROOF STRUCTURE WITH WEATHERHEAD. PROVIDE EQUIPMENT RACK IN ROOM 114; STANDARD 2-POST OR 4-POST RACK IS ACCEPTABLE. FULLY COORDINATE ALERTING SYSTEM REQUIREMENTS WITH ALL OTHER PROJECT WORK. CONTRACTOR SHALL PROVIDE WEATHERPROOF ROOF PENETRATION AT ANTENNA CONDUIT AND ALL REQUIRED STRUCTURAL BLOCKING. COMPLETE ALERTING SYSTEM DESIGN SHALL BE PROVIDED AS A DEFERRED SUBMITTAL.

ROOM #	ROOM NAME	ROOM #	ROOM NAME
101	LOBBY	201	BAT. CHIEF
102	RR 1	202	BALCONY
103	CAPT. OFFICE	203	BC RR
104	OFFICE	204	DORM 1
105	ELEV	205	RR
106	FITNESS	206	ELEV
107	STAIRWAY 1	207	RR 3
108	RR	208	BALCONY
109	ELECT.	209	CAPTAIN
110	HALLWAY	210	DORM 2
111	CUST.	211	DORM 3
112	EL MACH.	212	LAUNDRY
113	STOR	213	HALLWAY
114	TELECOM	214	ACCESSIBLE RR
115	TRAINING CLASSROOM	215	VEST
116	APPARATUS BAY	216	STOR 3
117	YARD ST	217	PANTRY
118	DECON	218	KITCHEN
119	EMS STOR.	219	DINING
120	TURNOUT	220	DAYROOM
121	COMP	221	DECK
122	SHOP	222	SLIDE POLE DECK
123	HOSE DRY STOR		
124	FR		
125	VESTIBULE		
126	STAIRWAY 2		

ROOM LEGEND

Not for permitting or construction

PBK

ARCHITECT PBK Architects, Inc.
PBK.com
SAN LUIS OBISPO
1327 Archer Street, Suite 110
San Luis Obispo, CA 93401
805-329-3076

FIRE STATION #44
COASTSIDE FIRE PROTECTION DISTRICT

501 STETSON STREET
MOSS BEACH, CA 94038

100% CD SET

COASTSIDE FIRE PROTECTION DISTRICT EST. 2022

BID SET

KEY PLAN

PLAN NORTH | TRUE NORTH

REGISTERED PROFESSIONAL ENGINEER
RICARDO E. SIFUENTES
No. E17229
6/30/26
STATE OF CALIFORNIA

CLIENT
COASTSIDE FIRE
PROTECTION DISTRICT
PROJECT NUMBER
230137
DATE 2/14/2025
DRAWN BY: LS CHKED BY: RES

REVISIONS

#	DESCRIPTION	DATE
1	PLAN CHECK #1 RESPONSE	12/05/25
2	PLAN CHECK #2 RESPONSE	03/13/26
3	PLAN CHECK #3 RESPONSE	05/22/26
4	PLAN CHECK #4 RESPONSE	08/25/26

ALERTING PLANS

This document is for plan review only

E2.5

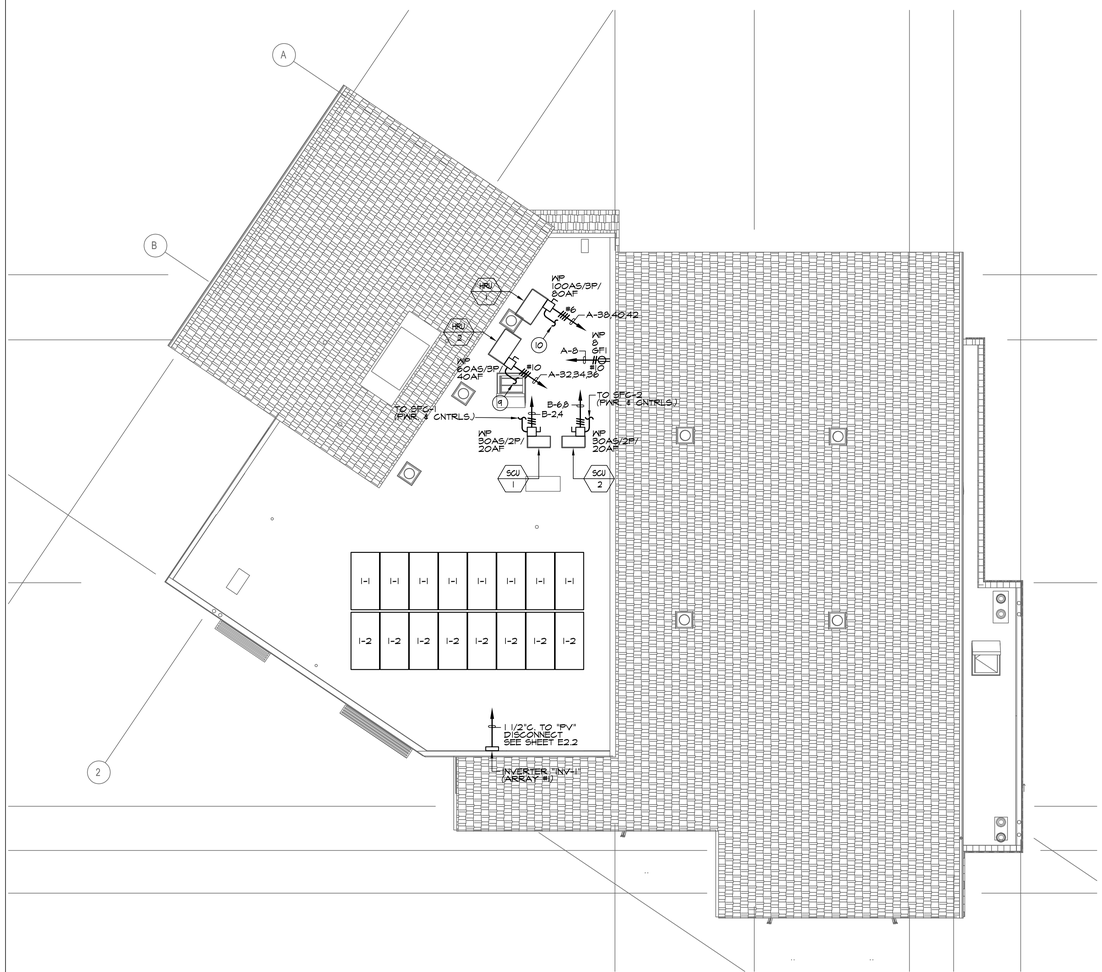

1 ROOF PLAN
SCALE: 1/8" = 1'-0"

2 NOT USED
SCALE: NONE

A&F ENGINEERING GROUP, INC.
9320 BASELINE RD., SUITE C, RANCHO CUCAMONGA, CA 91701
TEL: (909) 941-3008 FAX: (909) 941-8231

PLAN NOTES:

1. REFER TO GENERAL NOTES, DRAWING E0.1, FOR ADDITIONAL REQUIREMENTS.
2. SEE SINGLE LINE DIAGRAM, DRAWING E0.2 FOR CONDUIT SIZE AND WIRE SIZE AND QUANTITIES REQUIRED FOR ALL ELECTRICAL EQUIPMENT.
3. CONDUIT AND WIRE INDICATED ON THE SINGLE LINE DIAGRAM, WHETHER SHOWN ON THIS DRAWING OR NOT, SHALL BE A PART OF THIS CONTRACT AND THE RESPONSIBILITY OF THIS CONTRACTOR TO PROVIDE REQUIRED ROUTING TO MEET THE INTENT OF THESE PLANS AND SPECIFICATIONS.
4. THE CONTRACTOR SHALL NOTE THAT THE DRAWING IS DIAGRAMMATIC. EXACT ROUTING OF NEW CONDUITS AND LOCATION OF JUNCTION BOXES, SAFETY SWITCHES, DISCONNECT SWITCHES, PULL BOXES, ECT. SHALL BE COORDINATED AND DETERMINED IN THE FIELD. NEW CONDUIT, JUNCTION BOXES, SAFETY SWITCHES, DISCONNECT SWITCHES, PULL BOXES, ECT. SHALL BE ROUTED / PLACED IN SUCH A MANNER AS TO ADHERE TO ALL APPLICABLE CODES AND TO AVOID INTERFERENCE WITH EXISTING BUILDING STRUCTURES, UTILITIES AND THE WORK BEING PERFORMED BY OTHER TRADES. ALL EXTERIOR CONDUIT, FITTINGS, JUNCTION BOXES AND PULL BOXES TO BE WEATHER PROOF TYPE: NEMA 3R.
5. CONTRACTOR TO PROVIDE ENGRAVED LABELING AT EACH RECEPTACLE, DATA OUTLET, JUNCTION BOX, DISCONNECT SWITCH, ECT. DISPLAYING THE IDF OR PANEL (WITH CIRCUIT) FEEDING THE DATA OUTLET, RECEPTACLE, JUNCTION BOX, DISCONNECT SWITCH, ECT.
6. THE CONTRACTOR SHALL REFER TO THE MECHANICAL AND PLUMBING DRAWINGS FOR EXACT EQUIPMENT LOCATIONS AND ELECTRICAL CONNECTIONS REQUIREMENTS. CONTRACTOR SHALL PROVIDE ALL POWER AND CONTROL CONNECTIONS AS INDICATED ON THE MECHANICAL AND PLUMBING DRAWINGS.
7. CONTRACTOR SHALL ROUTE ELECTRICAL CONDUITS IN THE SAME ROUTE AS REFRIGERATION PIPING. CONTRACTOR TO COORDINATE WITH THE MECHANICAL AND PLUMBING DRAWINGS PRIOR TO START OF WORK TO DETERMINE EXACT ROUTE.
8. EXTERIOR MOUNTED DEVICES / RECEPTACLES SHALL BE PROVIDED COMPLETE WITH LOCKING TYPE WEATHERPROOF COVERS AND BE UL. LISTED FOR WET LOCATIONS WHEN IN USE. COVERS SHALL BE AS MANUFACTURED BY RACO OR APPROVED EQUAL. PLASTIC COVERS NOT ALLOWED.
9. INTERLOCK WITH FC 1-1 THRU FC 2-7 (POWER & CONTROLS).
10. INTERLOCK WITH FC 3-1 THRU FC 3-2 (POWER & CONTROLS).

PV MODULE: PS550M6-24/TH

MODULE Ipmax	MODULE Isc	SOURCE CIRCUIT CURRENT PER 690.8(A)(1)	OVERCURRENT/CONDUCTOR MINIMUM AMPACITY PER 690.8(B)(1)	MODULE VOLTAGE Vmp	MODULE OPEN CIRCUIT VOLTAGE Voc	MAXIMUM FUSE RATING
13.24	13.82	17.275	21.59	41.55	49.59	25

INVERTER	MPPT # STRING #	MODULES PER ARRAY	MODULES PER STRING	STRINGS	kW/STRING STC	STC kW	kW/STRING PTC	PTC kW	INVERTER EFFICIENCY	AC kW	
INV-1	1-1	8	8	1	4.40	4.4	3.312	3.312	0.965	3.196	
INV-1	1-2	8	8	1	4.40	4.4	3.312	3.312	0.965	3.196	
		16		2		8.8		6.624		6.392	17.8
		TOTAL MODULES		TOTAL STRINGS		TOTAL POWER STC (Kw)		TOTAL POWER PTC (Kw)		TOTAL POWER AC (Kw)	AC AMPS @ 208V

ROOM #	ROOM NAME	ROOM #	ROOM NAME
101	LOBBY	201	BAT. CHIEF
102	RR 1	202	BALCONY
103	CAPT. OFFICE	203	BC RR
104	OFFICE	204	DORM 1
105	ELEV	205	RR
106	FITNESS	206	ELEV
107	STAIRWAY 1	207	RR 3
108	RR	208	BALCONY
109	ELECT.	209	CAPTAIN
110	HALLWAY	210	DORM 2
111	CUST.	211	DORM 3
112	EL MACH.	212	LAUNDRY
113	STOR	213	HALLWAY
114	TELECOM	214	ACCESSIBLE RR
115	TRAINING CLASSROOM	215	VEST
116	APPARATUS BAY	216	STOR 3
117	YARD ST	217	PANTRY
118	DECON	218	KITCHEN
119	EMS STOR.	219	DINING
120	TURNOUT	220	DAYROOM
121	COMP	221	DECK
122	SHOP	222	SLIDE POLE DECK
123	HOSE DRY STOR		
124	FR		
125	VESTIBULE		
126	STAIRWAY 2		

ROOM LEGEND

Not for permitting or construction

PBK

ARCHITECT PBK Architects, Inc.
PBK.com
SAN LUIS OBISPO
1327 Archer Street, Suite 110
San Luis Obispo, CA 93401
805-329-3076

FIRE STATION #44
COASTSIDE FIRE PROTECTION DISTRICT

501 STETSON STREET
MOSS BEACH, CA 94038

100% CD SET

COASTSIDE FIRE PROTECTION DISTRICT EST. 2009

BID SET

KEY PLAN

PLAN NORTH TRUE NORTH

REGISTERED PROFESSIONAL ENGINEER RICARDO L. SOTELO No. E17229 8/30/26 STATE OF CALIFORNIA

CLIENT
COASTSIDE FIRE PROTECTION DISTRICT
PROJECT NUMBER
230137
DATE 2/14/2025
DRAWN BY: LS CHKED BY: RES

REVISIONS

#	DESCRIPTION	DATE
1	PLAN CHECK #1 RESPONSE	12/05/25
2	PLAN CHECK #2 RESPONSE	03/13/26
3	PLAN CHECK #3 RESPONSE	05/22/26
4	PLAN CHECK #4 RESPONSE	08/25/26

ROOF PLAN

This document is for plan review only

E2.6

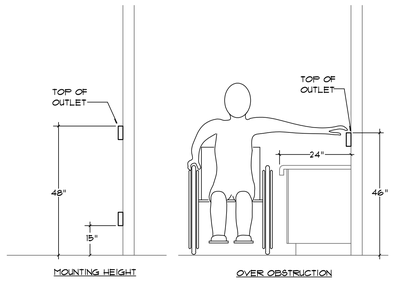

DEVICE MOUNTING HEIGHTS | SCALE: NONE | 1

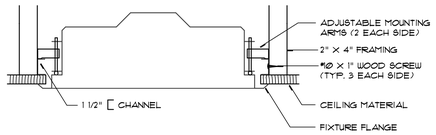

LIGHT FIXTURE - GYP BOARD CEILING | SCALE: NONE | 2

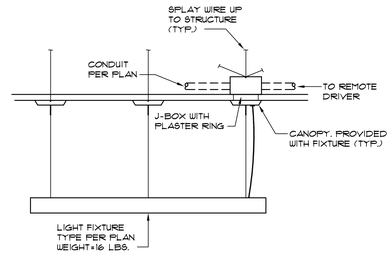

SUSPENDED ROUND FIXTURE | SCALE: NONE | 3

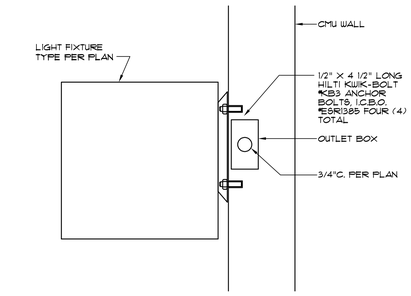

APP BAY - MAP LIGHT | SCALE: NONE | 4

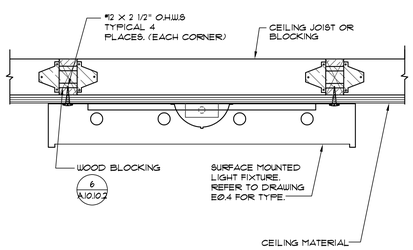

SURFACE MOUNTED FIXTURE | SCALE: NONE | 5

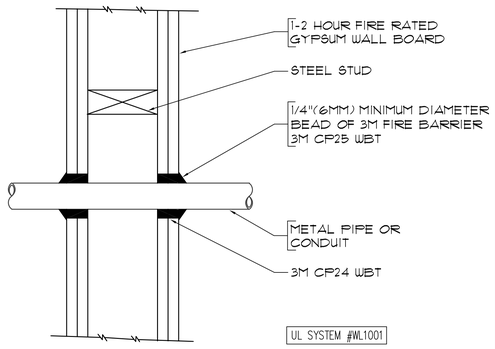

CONDUIT WALL PENETRATION | SCALE: NONE | 6

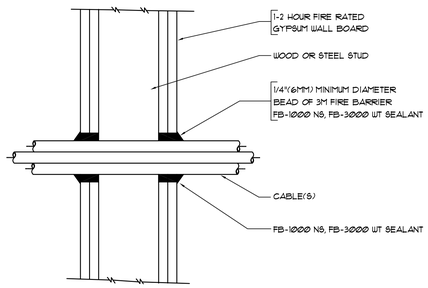

CABLE - WALL PENETRATION | SCALE: NONE | 7

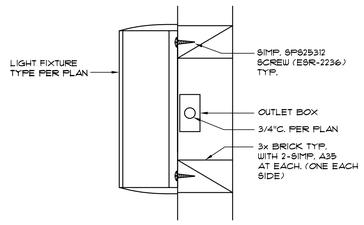

EXTERIOR FIXTURE - WALL MOUNTED | SCALE: NONE | 8

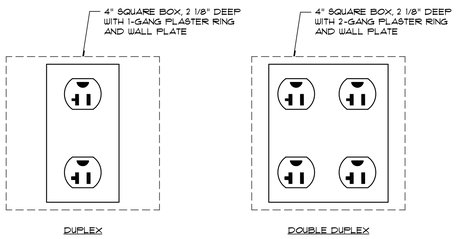

RECPTACLE - FLUSH MOUNTED | SCALE: NONE | 9

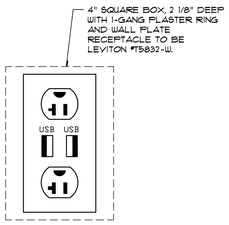

RECEPTACLE / USB OUTLET | SCALE: NONE | 10

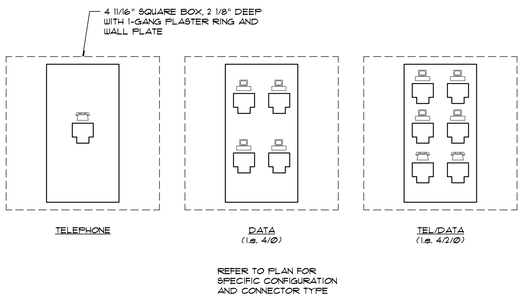

TEL/DATA OUTLET - FLUSH MOUNTED | SCALE: NONE | 11

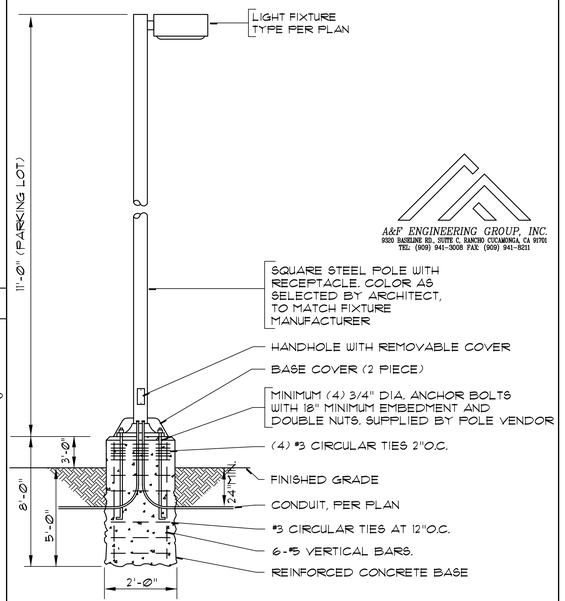

DEVICE MOUNTING HEIGHTS | SCALE: NONE | 15

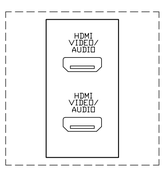

AUDIO-VIDEO (A/V) OUTLET | SCALE: NONE | 12

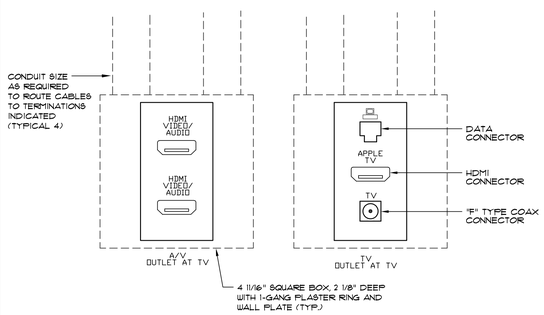

CONFERENCE/TRAINING A/V-TV OUTLET | SCALE: NONE | 13

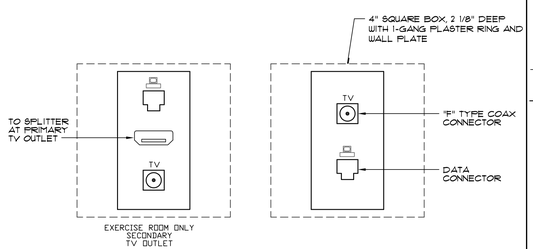

TV OUTLET - FLUSH MOUNTED | SCALE: NONE | 14

Not for permitting or construction

PBK

ARCHITECT
PBK Architects, Inc.
PBK.com
SAN LUIS OBISPO
1327 Archer Street, Suite 110
San Luis Obispo, CA 93401
805-329-3076

FIRE STATION #44
COASTSIDE FIRE PROTECTION DISTRICT

501 STETSON STREET
MOSS BEACH, CA 94038

100% CD SET

COASTSIDE FIRE PROTECTION DISTRICT EST. 2007

BID SET

KEY PLAN

PLAN NORTH | TRUE NORTH

REGISTERED PROFESSIONAL ENGINEER
ROLAND L. SIFFORD
No. 517229
6/30/26
STATE OF CALIFORNIA

CLIENT
COASTSIDE FIRE PROTECTION DISTRICT

PROJECT NUMBER
230137

DATE 2/14/2025

DRAWN BY: LS CHKED BY: RES

REVISIONS

#	DESCRIPTION	DATE
1	PLAN CHECK #1 RESPONSE	12/05/25
2	PLAN CHECK #2 RESPONSE	03/13/26
3	PLAN CHECK #3 RESPONSE	05/22/26
4	PLAN CHECK #4 RESPONSE	08/25/26

ELECTRICAL DETAILS

This document is for plan review only

E3.1